VALLEJO CENTER

NEW CLASSROOM BUILDING

VALLEJO EDUCATION CENTER
545 COLUMBUS PARKWAY
VALLEJO, CA. 94591

FOR SOLANO COMMUNITY COLLEGE DISTRICT
4000 SUISUN VALLEY ROAD, FAIRFIELD, CA.

IDENTIFICATION STAMP
DIVISION OF THE STATE ARCHITECT
APPL NO - 107417
AC/FLS FH SS
DATE 12/21/05

Harry L. Overstreet (HLO)

Kaplan McLaughlin Diaz
222 VALLEJO STREET
SAN FRANCISCO CALIFORNIA 94111

DSA APPROVAL SET
DECEMBER 8, 20005

AS BUILTS

RECORD OWNER:

NORTHGATE BUSINESS PARK, LLC,
A CALIFORNIA LIMITED LIABILITY COMPANY.

FLOOD ZONE INFORMATION:

THIS PARCEL IS LOCATED OUTSIDE THE LIMITS OF THE FLOOD PLAIN PER COMMUNITY PANEL NO. 060374 0005 C, DATED FEBRUARY 22, 1983, AND REVISED TO REFLECT LOMR DATED FEBRUARY 13, 2003.

ZONING DESIGNATION:

THIS PARCEL IS ZONED: M.U.P.D. – MIXED USE PLANNED DEVELOPMENT

ASSESSOR'S PARCEL NUMBER & ADDRESS:

0081–800–230 (AFFECTS THE LAND AND OTHER PROPERTY)
THIS PROPERTY HAS NO ADDRESS AS OF THE DATE OF THIS MAP.

NOTE:

BUILDING SETBACKS, DEVELOPMENT REQUIREMENTS, LIGHTING STANDARDS, ETC. ARE ADDRESSED AND SPECIFIED IN THE NORTHGATE SPECIFIC PLAN, ADOPTED BY THE VALLEJO CITY COUNCIL ON OCTOBER 25, 1988, AND MOST RECENTLY AMENDED BY THE VALLEJO CITY COUNCIL ON JULY 29, 2003 (RESOLUTION NUMBER 03–259 N.C.).

NOTE:

THE LAND TITLE SURVEY SHOWN AND DEPICTED HEREON WAS PREPARED IN ACCORDANCE WITH THE PRELIMINARY TITLE REPORT PREPARED BY FIRST AMERICAN TITLE COMPANY, DATED AS OF OCTOBER 31, 2003, ORDER NO. 4806–1115794, AND DEPICTS THE REAL PROPERTY AND ENCUMBRANCES DESCRIBED THEREIN. MATTERS PERTAINING TO TAXES, FINANCING, LEASING, LIENS AND OTHER ENCUMBRANCES REFERENCED IN SAID TITLE REPORT ARE NOT ADDRESSED HEREON. PERSONS INTERESTED IN SUCH MATTERS ARE REFERRED TO SAID TITLE REPORT AND RELATED DOCUMENTS FOR DETAILS.

(*THE WORDS "CERTIFICATION" AND "CERTIFY" AS USED HEREON ARE DEFINED PURSUANT TO THE STATE OF CALIFORNIA BUSINESS AND PROFESSIONS CODE, PROFESSIONAL LAND SURVEYORS ACT, SECTION 8770.6, AS AMENDED JANUARY 1, 1989).

NOTE: ONLY COPIES OF THIS DOCUMENT BEARING A SIGNATURE AND SEAL IN BLACK INK ARE TO BE CONSIDERED AS THE ORIGINAL AND UNMODIFIED WORK PRODUCT OF ROBERT A. KARN & ASSOCIATES, INC.

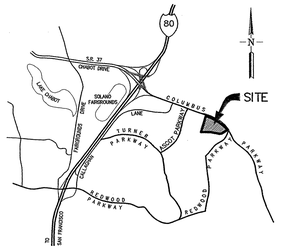

VICINITY MAP
NO SCALE

LEGAL DESCRIPTION

Real property in the City of Vallejo, County of Solano, State of California, described as follows:

A portion of Parcel 8, as shown on that parcel map filed on July 30, 2003, in Book 44 of Parcel Maps, at Page 69, Solano County Records, and being all of Parcel 8–A, as shown on lot line adjustment recorded October 31,2003 as Instrument No. 2003–189257 of Solano County Records, described as follows:

Beginning at the north corner of said Parcel 8, being a point on the southerly line of Columbus Parkway as shown on said Parcel Map, thence along the arc of a curve to the right, the radius point of which bears south 16°20'00" west, 1,922.96 feet through a central angle of 22°36'45", an arc distance of 758.62 feet; thence south 51°03'15" east, 74.85 feet; thence south 45°54'41" east, 191.23 feet; thence south 57°37'19" west, 287.76 feet; thence along the arc of a tangent curve to the right, having a radius of 93.00 feet, through a central angle of 43°30'22", an arc distance of 70.62 feet; thence north 78°52'18" west, 354.11 feet; thence north 89°42'41" west, 388.87 feet; thence north 16°20'00" east, 652.74 feet to the terminal point of this description.

APN: 0081–800–230

SURVEYOR'S CERTIFICATE

TO SOLANO COMMUNITY COLLEGE DISTRICT, A CALIFORNIA COMMUNITY COLLEGE DISTRICT, AND FIRST AMERICAN TITLE COMPANY:

THIS IS TO CERTIFY THAT THIS MAP AND THE SURVEY ON WHICH IT IS BASED WERE MADE (I) IN ACCORDANCE WITH "MINIMUM STANDARD DETAIL REQUIREMENTS FOR ALTA \ ACSM LAND TITLE SURVEYS", JOINTLY ESTABLISHED AND ADOPTED BY ALTA, ACSM AND NSPS IN 1992 AND INCLUDES ITEMS 2–5, AND 13 OF TABLE A THEREOF, AND (II) PURSUANT TO THE ACCURACY STANDARDS (AS ADOPTED BY ALTA AND ACSM AND IN EFFECT ON THE DATE OF THIS CERTIFICATION) OF AN URBAN SURVEY.

ROBERT A. KARN R.C.E. 33173 — DATED
LICENSE EXPIRES 6–30–2006

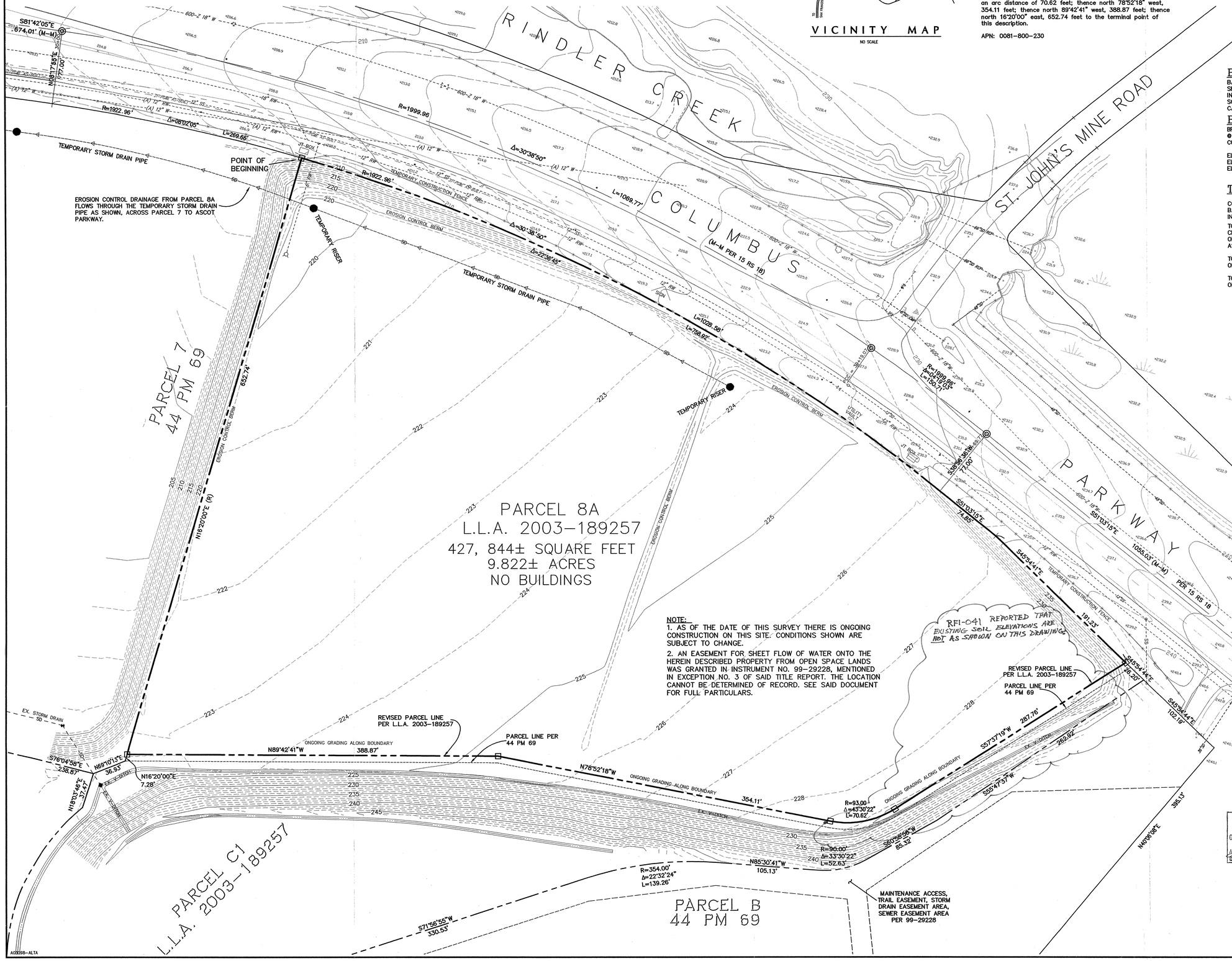

NOTE:
1. AS OF THE DATE OF THIS SURVEY THERE IS ONGOING CONSTRUCTION ON THIS SITE. CONDITIONS SHOWN ARE SUBJECT TO CHANGE.
2. AN EASEMENT FOR SHEET FLOW OF WATER ONTO THE HEREIN DESCRIBED PROPERTY FROM OPEN SPACE LANDS WAS GRANTED IN INSTRUMENT NO. 99–29228, MENTIONED IN EXCEPTION NO. 3 OF SAID TITLE REPORT. THE LOCATION CANNOT BE DETERMINED OF RECORD. SEE SAID DOCUMENT FOR FULL PARTICULARS.

BASIS OF BEARINGS:

BASIS OF BEARINGS FOR THIS SURVEY IS THE SAME AS SHOWN ON THAT PARCEL MAP FILED ON JULY 30, 2003, IN BOOK 44 OF PARCEL MAPS, AT PAGES 69 THROUGH 73, SOLANO COUNTY RECORDS. BEARINGS ARE BASED ON THE CALIFORNIA COORDINATE SYSTEM ZONE II, NAD 1927.

BENCH MARK:

BRASS DISC SET IN CONCRETE, FLUSH WITH THE GROUND @ CENTERLINE STATION 40+69.77 (POINT OF TANGENCY), COLUMBUS PARKWAY, STAMPED "SOLANO COUNTY".

ELEVATION: 231.65 CITY OF VALLEJO DATUM
ELEVATION: 225.31 NAD 1929 DATUM
ELEVATION: 227.92 NAVD 1988 DATUM

TOPOGRAPHY:

CONTOURS AND ELEVATIONS SHOWN ON THIS MAP ARE BASED ON CITY OF VALLEJO DATUM. SEE BENCHMARK INFORMATION ON THIS SHEET.

TOPOGRAPHY SHOWN ON THIS MAP IS SUBJECT TO CHANGE DUE TO ONGOING CONSTRUCTION. LOCATIONS OF UTILITIES, GRADING, DITCHES, ETC. MAY NOT BE AS SHOWN AND SHOULD BE VERIFIED IN THE FIELD.

TOPOGRAPHY ON COLUMBUS PARKWAY IS A COMBINATION OF AERIAL & FIELD TOPOGRAPHY SURVEYED IN APRIL, 2003.

TOPOGRAPHY SOUTH OF COLUMBUS PARKWAY IS BASED ON FIELD TOPOGRAPHY SURVEYED IN OCTOBER, 2003.

LEGEND

BSL	BUILDING SETBACK LINE
C/L	CENTERLINE
CONC	CONCRETE
EP	EDGE OF PAVEMENT
EX	EXISTING
FL	FLOW LINE
INV	INVERT
JT	JOINT TRENCH
L.L.A.	LOT LINE ADJUSTMENT
OR	OFFICIAL RECORDS
PG	PAGE
PM	PARCEL MAP
(R)	RADIAL
S.C.R.	SOLANO COUNTY RECORDS
△	DIRECTION OF FLOW
	FIRE HYDRANT
OR	POWER POLE
	POLE ANCHOR
	STREET LIGHT BOX
	RISER
	WATER METER
	MANHOLE AS NOTED
	WATER VALVE
	SERVICE BOX
	STREET LIGHT
	UTILITY BOX AS NOTED
	TRAFFIC SIGNAL
	SURVEY MONUMENT TO BE SET PER 44 PM 69
	STREET MONUMENT TO BE SET PER 44 PM 69
	BOUNDARY LINE
	ADJACENT PROPERTY LINE
	EASEMENT LINE
RW	EXISTING RAW WATER LINE
SD	EXISTING STORM DRAIN
SS	EXISTING SANITARY SEWER
W	EXISTING WATER LINE
G	EXISTING GAS LINE
100	EXISTING INTERMEDIATE CONTOUR
	EXISTING INDEX CONTOUR
	EXISTING FENCE
600–Z W	EXISTING 600 ZONE WATER LINE
③	TITLE EXCEPTION NUMBER FOR PLOTTABLE EXCEPTIONS

IDENTIFICATION STAMP
DIV. OF THE STATE ARCHITECT
02 10 7417
AC FLS RL GS ALL
DATE 12/21/18

ROBERT A. KARN & ASSOCIATES, INC.
707 BECK AVENUE #4633
FAIRFIELD, CALIFORNIA
Phone: (707) 435-9999 Fax: (707) 435-9988
e-mail: rakarnengineers.com
CIVIL ENGINEERS

© COPYRIGHT 2003 ROBERT A. KARN & ASSOCIATES, INC.

ALTA/ACSM LAND TITLE SURVEY
PARCEL 8A, L.L.A. 2003-189257
AS BUILTS
SOLANO COMMUNITY COLLEGE
VALLEJO, SOLANO COUNTY, CALIFORNIA

DATE	BY	CK
02/16/05	MK	

SHEET REVISIONS
REVISE DRAINAGE EASEMENT, 5TH TIDBIT
RECEIVED
JAN - 1 2006
KITCHELL CEM

SCALE 1"=40'
DATE 11/17/03
DRAWN JMD
CHECKED
PROJ. MGR. ETJ

SHEET NO. 1
OF 1 SHEETS
JOB NO. A03098

A03098–ALTA

PATH: G:\000\000-000\ACAD\SHEETS\

ABBREVIATIONS

#	POUND OR NUMBER
&	AND
A.	AIR
A.B.	ANCHOR BOLT
A.D.	AREA DRAIN
A/C	AIR CONDITIONING
A.C.T.	ACOUSTICAL CEILING TILE
AESS	ARCHITECTURALLY EXPOSED STRUCTURAL STEEL
A.F.C.	ABOVE FINISHED COUNTER
A.F.F.	ABOVE FINISHED FLOOR
A.F.G.	ABOVE FINISHED GRADE
A.F.S.	ABOVE FINISHED SLAB
ACOUS.	ACOUSTIC
ACOUS. INSUL.	ACOUSTICAL INSULATION
ACOUS. PNL.	ACOUSTICAL PANEL
ACS. DR.	ACCESS DOOR
ACS. FLR.	ACCESS FLOOR
ACS. PNL.	ACCESS PANEL
ADJ.	ADJUSTABLE
ALT.	ALTERNATE
ALUM.	ALUMINUM
ANR	ANCHOR
ARCH.	ARCHITECTURAL
ASPH.	ASPHALT
ATCH.	ATTACHMENT
AUTO.	AUTOMATIC
B.O.	BOTTOM OF
B.O.S.	BOTTOM OF STEEL
B.P.	BUILDING PAPER
B.S.	BOTH SIDES
B.U.R.	BUILT-UP ROOFING
BD.	BOARD
BITUM.	BITUMINOUS
BKG.	BACKING
BLDG.	BUILDING
BLK.	BLOCK
BLKG.	BLOCKING
BLST.	BALLAST
BM.	BEAM
BRCG.	BRACING
BRZ.	BRONZE
C.	CHANNEL
C.B.	CATCH BASIN
C.B.BD.	CEMENTITIOUS BACKER BOARD
C.C.T.	CUBICLE CURTAIN TRACK
C.C.TV.	CLOSED CIRCUIT TELEVISION
C.F.	CONTRATOR FURNISHED
C.F./O.I.	CONTRACTOR FURNISHED/OWNER INSTALLED
C.G.	CORNER GUARD
C.H.	COAT HOOK
C.I.	CAST IRON
C.J.	CONTROL JOINT
C.L.	CENTER LINE
C.M.U.	CONCRETE MASONRY UNIT
C.O.	CASED OPENING
CO2	CARBON DIOXIDE
C.R.	CHAIR RAIL
C.S.	CLINICAL SINK
C.T.	CERAMIC TILE
CAB.	CABINET
C-C	CENTER TO CENTER
CEM.	CEMENT
CEM. PLAS.	CEMENT PLASTER
CEM. PLAS. CLG.	CEMENT PLASTER CEILING
CHBD.	CHALKBOARD
CIRC.	CIRCULAR
CLDG.	CLADDING
CLG.	CEILING
CLG. HT.	CEILING HEIGHT
CLO.	CLOSET
CLR.	CLEAR
CNTR.	COUNTER
COL.	COLUMN
CONC.	CONCRETE
CONC. FLR.	CONCRETE FLOOR
CONC. OPNG.	CONCRETE OPENING
CONF.	CONFERENCE
CONN.	CONNECTION
CONT.	CONTINUOUS
CORR.	CORRIDOR
CPN. J.	COMPENSATION JOINT
CPT.	CARPET
CPT. T.	CARPET TILE
CTR.	CENTER
D.	DEEP
D.F.	DRINKING FOUNTAIN
D.T.	DRAPERY TRACK
D.W.	DISH WASHER
DBL.	DOUBLE
DEMO.	DEMOLITION
DEPT.	DEPARTMENT
DET.	DETAIL
DETN.	DETENTION
DIA.	DIAMETER
DIAG.	DIAGONAL
DIM.	DIMENSION
DISP.	DISPENSER
DMPF.	DAMPPROOFING
DN.	DOWN
DS.	DOWNSPOUT
DWG.	DRAWING
DWR.	DRAWER
(E)	EXISTING
E.	EAST
E. G.	END GUARD
E.H.D.	ELETRICAL HAND DRYER
E.I.F.S.	EXTERIOR INSULATION AND FINISH SYSTEM
E.J.	EXPANSION JOINT
E.P.	ELECTRICAL PANELBOARD
E.S.	ELASTOMERIC/ EXPOSED STRUCTURE
E.W.C.	ELECTRICAL WATER COOLER
EA.	EACH
EL.	ELEVATION
ELAST.	ELASTOMERIC
ELEC.	ELECTRICAL
ELEV.	ELEVATOR
EMER.	EMERGENCY
ENCL.	ENCLOSURE
ENGR.	ENGINEER
ENTR.	ENTRANCE
EQ.	EQUAL
EQUIP.	EQUIPMENT
EXP.	EXPANSION
EXP. BT.	EXPANSION BOLT
EXT.	EXTERIOR
F.A.	FIRE ALARM
F.A.A.P.	FIRE ALARM ANNUNCIATOR PANEL
F.D.	FLOOR DRAIN
F.D.C.	FIRE DEPARTMENT CONNECTION
F.E.	FIRE EXTINGUISHER
F.E.C.	FIRE EXTINGUISHER CABINET
F.H.C.	FIRE HOSE CONNECTION
F.O.	FACE OF
F.O.C.	FACE OF CONCRETE
F.O.F.	FACE OF FINISH
F.O.S.	FACE OF STUD
F.T.	FIRE TREATED
FIN.	FINISH
FLR.	FLOOR
FLASH.	FLASHING
FLEX.	FLEXIBLE
FLUOR.	FLUORESCENT
FP.	FIREPROOFING
FT.	FOOT/FEET
FTG.	FOOTING
FURR.	FURRING
FUT.	FUTURE
G.B.	GRAB BAR
G.F.R.C.	GLASS FIBER REINFORCED CONCRETE
G.F.R.G.	GLASS FIBER REINFORCED GYPSUM
G.F.R.P.	GLASS FIBER REINFORCED PLASTER
G.M.U.	GLASS MASONRY UNIT
GA.	GAUGE
GALV.	GALVANIZED
GL.	GLASS
GLU. LAM.	GLUED LAMINATED WOOD
GND.	GROUND
GR.	GRADE
GROM	GROMMET
GYP.	GYPSUM
GYP. BD.	GYPSUM BOARD
H.	HIGH
H.B.	HOSE BIBB
H.M.	HOLLOW METAL
H.P.	HIGH POINT
H.V.A.C.	HEATING VENTILATION AND AIR CONDITIONING
H.W.	HOT WATER
HDW.	HARDWARE
HDWD.	HARDWOOD
HNDRL.	HANDRAIL
HORIZ.	HORIZONTAL
HR.	HOUR
HT.	HEIGHT

I.D.	INSIDE DIAMETER
IV.T.	INTRAVENEOUS TRACK
IN.	INCH
INSUL.	INSULATION
INT.	INTERIOR
INV.	INVERT
J.C.	JANITOR CLOSET
JT.	JOINT
K.B.	KNEE BRACE
K.P.	KICK PLATE
KIT.	KITCHEN
	ANGLE
L.	LONG
L.L.	LEAD LINED
LAM.	LAMINATED
LAM. GL.	LAMINATED GLASS
LAUN.	LAUNDRY
LAV.	LAVATORY
LIN.	LINEN
LKR.	LOCKER
LN.	LINOLEUM
L.PT.	LOW POINT
LT.	LIGHT
LVR.	LOUVER
M.D.O.	MEDIUM DENSITY OVERLAY
M.O.	MASONRY OPENING
MACH.	MACHINE
MATL.	MATERIAL
MAX.	MAXIMUM
MECH.	MECHANICAL
MEMB.	MEMBRANE
MET.	METAL
MFR.	MANUFACTURER
MH.	MANHOLE
MIN.	MINIMUM
MIRR.	MIRROR
MISC.	MISCELLANEOUS
MKR. BD.	MARKER BOARD
MTD.	MOUNTED
MULL.	MULLION
(N)	NEW
N.	NORTH
N.C.	NURSE CALL
N.I.C.	NOT IN CONTRACT
N.T.S.	NOT TO SCALE
NO.	NUMBER
NOM.	NOMINAL
O.C.	ON CENTER
O.D.	OUTSIDE DIAMETER/
O.F.C.I.	OWNER FURNISHED/CONTRACTOR INSTALLED
O.F.O.I.	OWNER FURNISHED/OWNER INSTALLED
OFD.	OVERFLOW DRAIN
OFF.	OFFICE
OPP.	OPPOSITE
OPP. HND.	OPPOSITE HAND
OPNG.	OPENING
P.C.D.	PAPER CUP DISPENSER
P.L.	PROPERTY LINE
P.LAM.	PLASTIC LAMINATE
P.T.D.	PAPER TOWEL DISPENSER
P.T.D.R.	PAPER TOWEL DISPENSER AND RECEPTACLE
P.T.R.	PAPER TOWEL RECEPTACLE
P.V.C	POLYVINYL CHLORIDE
PAV.	PAVING
PL.	PLATE
PLAS.	PLASTER
PLBG.	PLUMBING
PLYWD.	PLYWOOD
PNL	PANEL
POL.	POLISHED
PR.	PAIR
PRCST.	PRECAST
PT.	PAINT
PTN.	PARTITION
Q.T.	QUARRY TILE
QTY.	QUANTITY
R.	RISER OR RADIUS
R.B.	RUBBER BASE
R.C.P.	REFLECTED CEILING PLAN
R.D.	ROOF DRAIN
R.H.	ROBE HOOK
R.O.	ROUGH OPENING
R.W.L.	RAIN WATER LEADER
RECT.	RECTANGULAR
REF.	REFERENCE OR REFRIDGERATOR
REINF.	REINFORCING OR REINFORCED
REQD.	REQUIRED
RESIL.	RESILIENT
RM.	ROOM
RND.	ROUND
RUB.	RUBBER
S.	SOUTH
S.C.R.	SHOWER CURTAIN ROD
S.D.	SOAP DISPENSER
S.E.D.	SEE ELECTRICAL DRAWINGS
S.F.	SQUARE FEET
S.R.	SHEET RUBBER
S.M.D.	SEE MECHANICAL DRAWINGS
S.M.S.	SHEET METAL SCREWS
S.N.D.	SAN. NAPKIN DISPENSER
S.P.D.	SEE PLUMBING DRAWINGS
S.S.	SOLID SURFACING
S.S.D.	SEE STRUCTURAL DRAWING
S.SK.	SERVICE SINK
S.ST.	STAINLESS STEEL
S.V.	SHEET VINYL
SCHED.	SCHEDULE
SECT.	SECTION
SECUR.	SECURITY
SHR.	SHOWER
SHT.	SHEET
SHTHG.	SHEATHING
SIM.	SIMILAR
SPEC.	SPECIFICATION
SPKR.	SPEAKER
SPKLR.	SPRINKLER
SQ.	SQUARE
STA.	STATION
STD.	STANDARD
STL.	STEEL
STOR.	STORAGE
STN.	STONE
STRL.	STRUCTURAL
SUSP.	SUSPENDED
SYM.	SYMETRICAL
T.	TREAD
T.&G.	TONGUE AND GROOVE
T.B.	TOWEL BAR/TIE BACK
T.C.	TOP OF CURB
T.O.	TOP OF
T.O.B.	TOP OF BEAM
T.O.C	TOP OF CONCRETE
T.O.P	TOP OF PARAPET
T.P.	TOP OF PAVEMENT
T.P.D.	TOILET PAPER DISPENSER
T.V.	TELEVISION
T.O.W.	TOP OF WALL
T.S.	TUBE STEEL
TEL.	TELEPHONE
TER.	TERRAZZO
THK.	THICK
THRES.	THRESHOLD
TKBD.	TACKBOARD
TYP.	TYPICAL
U.N.O.	UNLESS NOTED OTHERWISE
U.O.N.	UNLESS OTHERWISE NOTED
UR.	URINAL
V.B.	VAPOR BARRIER
V.C.T.	VINYL COMPOSITION TILE
V.G.	VERTICAL GRAIN
V.I.F.	VERIFY IN FIELD
V.PLAS.	VENEER PLASTER
VAC.	VACUUM
VENT.	VENTILATION
VERT.	VERTICAL
VEST.	VESTIBULE
W.	WEST OR WIDE
W/	WITH
W.B.	WALL BUMPER
W.C.	WATER CLOSET
W.G.	WALL GUARD
W.O.	WHERE OCCURS
W.W.M.	WELDED WIRE MESH
WD.	WOOD
WDC.	WOOD CEILING
WP.	WATERPROOF/ WATERPROOFING
WSCT.	WAINSCOT
WT.	WEIGHT
X	TIMES OR BY (2x4)
YD.	YARD

ARCHITECTURAL SYMBOLS

COLUMN LINE	A — 1
BUILDING SECTION	1 / A6.03 — SECTION IDENTIFICATION; SHEET WHERE SECTION IS DRAWN
WALL SECTION	1 / A9.03 — SECTION IDENTIFICATION; SHEET WHERE SECTION IS DRAWN
ELEVATION	1 / A5.03 — ELEVATION IDENTIFICATION; SHEET WHERE ELEVATION IS DRAWN
INTERIOR ELEVATION	A, B, C, D; 1 / A9.01 — ELEVATION IDENTIFICATION; SHEET WHERE ELEVATION IS DRAWN
ENLARGED PLAN OR ELEVATION	1 / A7.03 — PLAN IDENTIFICATION; SHEET WHERE PLAN IS DRAWN; CIRCLED AREA SHOWN ON LARGE SCALE PLAN OR ELEVATION
GLASS TYPE	1 — GLASS IDENTIFICATION
ROOM TITLE & NUMBER	OFFICE — TITLE; 216 — NUMBER; FIRST DIGIT IS FLOOR LEVEL
DOOR NUMBER	216A — DOOR SUFFIX FOR MULTIPLE DOORS; GENERALLY CORRESPONDS TO ROOM NUMBER WHERE DOOR OCCURS
CEILING HEIGHT	(8'-0") CEILING HEIGHT (ON PLANS)
MATCH LINE	SIDE SHOWN
KEY NOTES	1 — NUMBERED (OR KEY) NOTES
ELEVATION REFERENCE	(E) 0.00; 0.00 (N); 0.00 0.00 (N) (E)
ELEVATION ABOVE PROJECT DATUM	EL. 100'-0" FL. 8
EQUIPMENT REFERENCE	2 — EQUIPMENT IDENTIFICATION
NORTH ARROW	
REVISION	CLOUD AROUND REVISION OPTIONAL
OTHER	WORK POINT, CONTROL POINT OR DATUM POINT; PROPERTY LINE
PARTITION SYMBOL CODE	RATING — TYPE — HEIGHT: 1.1.FH
FIRE/ LIFE SAFETY SYMBOLS	1 HOUR RATED; 2 HOUR RATED; OCCUPANCY SEPARATION; SMOKE BARRIER

DEFERRED APPROVAL LIST

1. AUTOMATIC FIRE SPRINKLER SYSTEM
2. ELEVATOR GUIDE RAILS AND SUPPORT BRACKETS
3. WINDOW WALLS & SYSTEMS WITH SPANS OVER 10'
4. UNDER GROUND FIRE SERVICE PLAN.

INDEX OF DRAWINGS

–	COVER SHEET
A0.01	NOTES, ABBREVIATIONS & DRAWING INDEX
A0.02	FIRE LIFE SAFETY PLANS & CODE SUMMARY
–	OWNER'S SURVEY
CIVIL	
C1.01	SITE DIMENSION PLAN
C1.02	GRADING AND DRAINAGE PLAN
C1.03	UTILITIES PLAN
C1.04	CIVIL DETAILS
C1.05	EROSION CONTROL
LANDSCAPE	
L0.00	INDEX, NOTES & LEGEND
L1.01	LANDSCAPE MATERIALS PLAN
L2.01	LANDSCAPE LAYOUT PLAN
L3.01	LANDSCAPE GRADING PLAN
L4.01	LANDSCAPE DRAIN / PIPING PLAN
L5.01	LANDSCAPE PLANTING PLAN
L6.01	LANDSCAPE MATERIALS BLOW UP PLAN
L6.02	LANDSCAPE LAYOUT-WEST BLOW UP PLANS
L6.02A	LANDSCAPE LAYOUT-EAST BLOW UP PLAN
L6.02B	LANDSCAPE JOINT LAYOUT BLOW UP PLAN
L6.03	LANDSCAPE GRADING BLOW UP PLAN
L6.04	LANDSCAPE DETAILS
L6.05	LANDSCAPE DETAILS
L6.06	LANDSCAPE DETAILS
L6.07	LANDSCAPE DETAILS
L6.08	LANDSCAPE DETAILS
L6.09	LANDSCAPE DETAILS
L6.10	LANDSCAPE DETAILS
L7.01	LANDSCAPE IRRIGATION NOTES & LEGEND
L7.02	LANDSCAPE IRRIGATION PLAN
L7.03	LANDSCAPE IRRIGATION DETAILS
ARCHITECTURAL	
A1.01	EXISTING SITE PLAN
A1.02	NEW SITE PLAN
A1.21	SITE & SIGNAGE DETAILS
A1.23	TYPICAL MOUNTINGS
A1.30	SITE SIGNAGE PLAN & ACCESSIBLE PATH OF TRAVEL
A2.00	GRID GEOMETRY PLAN
A2.01	FIRST FLOOR PLAN
A2.02	SECOND FLOOR PLAN
A2.03	ROOF PLAN
A2.11	PARTIAL FIRST FLOOR PLAN
A2.12	PARTIAL FIRST FLOOR PLAN
A2.21	PARTIAL SECOND FLOOR PLAN
A2.22	PARTIAL SECOND FLOOR PLAN
A2.31	PARTIAL ROOF PLAN
A2.32	PARTIAL ROOF PLAN
A3.01	DETAILED FLOOR PLAN AND ELEVATIONS – LECTURE HALL
A3.02	DETAILED FLOOR PLAN AND ELEVATIONS – LOBBY
A3.21	DETAILED FLOOR PLAN AND ELEVATIONS RESTROOMS
A3.22	DETAILED FLOOR PLANS AND ELEVATIONS RESTROOMS
A4.11	PARTIAL FIRST FLOOR REFLECTED CEILING PLAN
A4.12	PARTIAL FIRST FLOOR REFLECTED CEILING PLAN
A4.21	PARTIAL SECOND FLOOR REFLECTED CEILING PLAN
A5.01	OVERALL EXTERIOR ELEVATIONS
A5.02	EXTERIOR ELEVATIONS
A5.03	EXTERIOR ELEVATIONS
A5.04	EXTERIOR ELEVATIONS
A5.21	DETAILED EXTERIOR ELEVATIONS
A5.22	DETAILED EXTERIOR ELEVATIONS
A5.23	DETAILED EXTERIOR ELEVATIONS
A5.24	DETAILED EXTERIOR ELEVATIONS
A6.01	BUILDING SECTIONS
A6.02	BUILDING SECTIONS
A6.21	WALL SECTIONS
A6.22	WALL SECTIONS
A6.23	WALL SECTIONS
A6.24	WALL SECTIONS
A6.25	WALL SECTIONS
A6.26	WALL SECTIONS
A7.01	VERTICAL CIRCULATION
A7.02	VERTICAL CIRCULATION DETAILS
A7.03	VERTICAL CIRCULATION DETAILS
A8.01	EXTERIOR DETAILS PLAN
A8.02	EXTERIOR DETAILS PLAN
A8.03	EXTERIOR DETAILS PLAN
A8.11	EXTERIOR DETAILS SECTION
A8.12	EXTERIOR DETAILS SECTION
A8.13	EXTERIOR DETAILS SECTION
A8.14	EXTERIOR DETAILS SECTION
A8.15	EXTERIOR DETAILS
A8.16	EXTERIOR DETAILS
A8.17	EXTERIOR DETAILS CANOPY
A8.51	EXTERIOR DETAILS ROOF
A8.52	EXTERIOR DETAILS ROOF
A8.53	EXTERIOR DETAILS ROOF
A8.54	EXTERIOR DETAILS ROOF
A9.00	INTERIOR FINISH SCHEDULE
A9.01	DETAILED FIRST FLOOR FINISH PLAN
A9.02	DETAILED FIRST FLOOR FINISH PLAN
A9.03	DETAILED FIRST FLOOR FINISH PLAN
A9.04	DETAILED SECOND FLOOR FINISH PLAN
A9.05	DETAILED SECOND FLOOR FINISH PLAN
A9.06	DETAILED SECOND FLOOR FINISH PLAN
A9.10	INTERIOR ELEVATIONS
A9.11	INTERIOR ELEVATIONS
A9.12	INTERIOR ELEVATIONS
A10.00	CEILING AND PARTITION NOTES
A10.01	PARTITION SCHEDULE
A10.02	FRAMING DETAILS
A10.03	FRAMING DETAILS
A10.04	INTERIOR FRAMING DETAILS
A10.05	CEILING DETAILS
A10.06	CEILING DETAILS
A10.07	CEILING DETAILS
A10.10	OPENING SCHEDULE
A10.11	INTERIOR DOOR AND WINDOW DETAILS
A10.20	INTERIOR DETAILS
A10.22	CASEWORK DETAILS
A10.23	CASEWORK DETAILS
A10.24	CASEWORK DETAILS
LAB ARCHITECT	
QL0.01	SCHEDULES, GENERAL NOTES, LEGENDS, SHEET INDEX
QL0.02	CASEWORK SCHEDULE
QL2.02	PARTIAL SECOND FLOOR PLAN
QL3.01	SECTIONS, DETAILS
STRUCTURAL	
S1.01	GENERAL STRUCTURAL NOTES & SYMBOLS
S2.11	FOUNDATION PLAN CLASSROOM BUILDING
S2.12	FOUNDATION PLAN MULTI-USE BUILDING
S2.21	SECOND FLOOR FRAMING PLAN
S2.31	ROOF FRAMING PLAN CLASSROOM BUILDING
S2.32	ROOF FRAMING PLAN MULTI-USE BUILDING
S3.01	BRACED FRAME ELEVATIONS
S5.01	TYPICAL STEEL DETAILS
S5.02	CONCRETE FOUNDATION DETAILS
S7.01	TYPICAL STEEL DETAILS
S7.02	TYPICAL DECK DETAILS
S7.03	BRACED FRAME DETAILS
S7.04	STEEL DETAILS
S7.05	STEEL DETAILS
S8.01	TYPICAL WOOD AMD LIGHT GAUGE METAL DETAILS
S8.02	TYPICAL WOOD AMD LIGHT GAUGE METAL DETAILS
S8.03	TYPICAL WOOD AMD LIGHT GAUGE METAL DETAILS
S8.04	DETAILS
MECHANICAL	
M0.01	MECHANICAL LEGENDS, ABBREVIATIONS & GENERAL NOTES
M0.02	MECHANICAL TITLE 24
M0.03	MECHANICAL TITLE 24
M0.04	MECHANICAL TITLE 24
M2.11	FIRST FLOOR MECHANICAL PLAN BUILDING A
M2.12	FIRST FLOOR MECHANICAL PLAN BUILDING B
M2.21	SECOND FLOOR MECHANICAL PLAN BUILDING A
M2.22	MECHANICAL ROOF PLAN BUILDING B
M2.31	MECHANICAL ROOF PLAN BUILDING A
MP2.11	FIRST FLOOR MECHANICAL PIPING PLAN BUILDING A
MP2.12	SECOND FLOOR MECHANICAL PIPING PLAN BUILDING B
MP2.21	MECHANICAL ROOF PIPING PLAN BUILDING A
MP2.22	MECHANICAL ROOF PIPING PLAN BUILDING B
M3.01	MECHANICAL SECTION BUILDING A
M3.02	MECHANICAL SECTION BUILDING B
M4.01	MECHANICAL SCHEDULES
M4.02	MECHANICAL SCHEDULES
M5.01	MECHANICAL DIAGRAMS
M6.01	MECHANICAL DETAILS
M6.02	MECHANICAL DETAILS
M6.03	MECHANICAL DETAILS
M6.04	MECHANICAL DETAILS
M6.05	MECHANICAL DETAILS
M7.01	MECHANICAL CONTROL DIAGRAMS
M7.02	MECHANICAL CONTROL DIAGRAMS
PLUMBING	
P0.01	PLUMBING LEGENDS, ABBREVIATIONS & NOTES
P2.11	FIRST FLOOR PLUMBING PLAN BUILDING A
P2.12	FIRST FLOOR PLUMBING PLAN BUILDING B
P2.21	SECOND FLOOR PLUMBING PLAN BUILDING A
P2.22	PLUMBING ROOF PLAN BUILDING B
P2.31	PLUMBING ROOF PLAN BUILDING A
P2.32	PLUMBING ROOF PLAN BUILDING B
P3.01	ENLARGED PLUMBING PLANS
P4.01	PLUMBING SCHEDULES
P6.01	PLUMBING DETAILS
P6.02	PLUMBING DETAILS
P6.03	PLUMBING DETAILS
ELECTRICAL	
E0.01	ELECTRICAL LEGEND, ABBREVIATIONS, SYYBOLS, INDEX, NOTES
E0.02	LIGHTING FIXTURE SCHEDULE AND TITLE 24 COMPLIANCE
E0.03	LIGHTING FIXTURE SCHEDULE AND TITLE 24 COMPLIANCE
E1.00	ELECTRICAL SITE PLAN
E2.11	BUILDING A FIRST FLOOR LIGHTING PLAN
E2.12	BUILDING B FIRST FLOOR LIGHTING PLAN
E2.21	BUILDING A SECOND FLOOR LIGHTING PLAN
E3.11	BUILDING A FIRST FLOOR POWER PLAN
E3.12	BUILDING B FIRST FLOOR POWER PLAN
E3.21	BUILDING A SECOND FLOOR POWER PLAN
E3.22	BUILDING B POWER PLAN
E3.31	BUILDING A POWER ROOF PLAN
E4.00	FIRE ALARM SYSTEM NOTES, ABBREVIATIONS, SCHEDULES
E4.11	BUILDING A FIRST FLOOR FIRE ALARM PLAN
E4.12	BUILDING B FIRST FLOOR FIRE ALARM PLAN
E4.21	BUILDING A SECOND FLOOR FIRE ALARM PLAN
E5.01	SINGLE LINE DIAGRAM
E5.02	PANEL BOARD SCHEDULES
E5.03	PANEL BOARD SCHEDULES
E6.01	ELECTRICAL DETAILS
E6.02	ELECTRICAL DETAILS

BUILDING DATA

BUILDING AREA: 39,468 GSF
PARKING AREA: 97,880 GSF
PRIMARY OCCUPANCY: B OCCUPANCY WITH ANCILLARY A-3
CONSTRUCTION TYPE: TYPE V-1HR WITH CBC 508 FIRE RESISTIVE SUBSTITUTION

LOCATION MAP

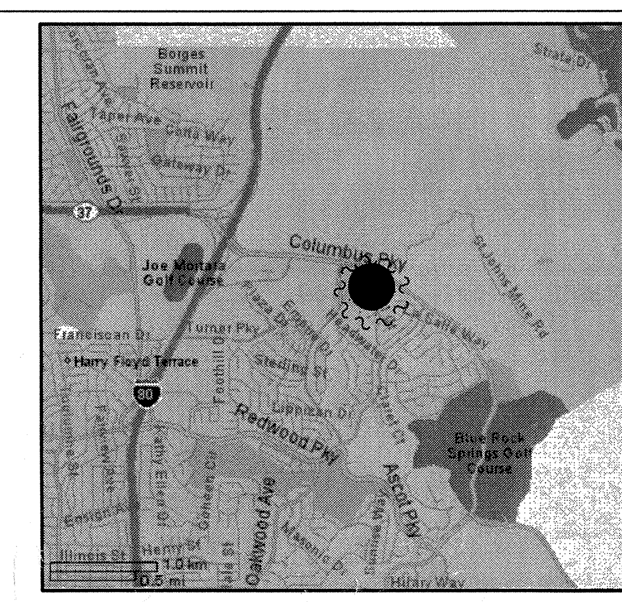

PROJECT DIRECTORY

OWNER
SOLANO COMMUNITY COLLEGE DISTRICT
4000 SUISUN VALLEY ROAD
FAIRFIELD, CA 94585-3197
T (707) 864-7197
F (707) 864-7192

CONSTRUCTION MANAGER
KITCHELL CEM
4000 SUISUN VALLEY ROAD
FAIRFIELD, CA 94534-3197
T (707) 864-7189
F (707) 207-0423

CONTRACTOR
FIRM NAME
ADDRESS
CITY, STATE, ZIP
T (XXX) XXX-XXXX
F (XXX) XXX-XXXX

ARCHITECT
KMD ARCHITECTS
222 VALLEJO STREET
SAN FRANCISCO, CA 94111
T (415) 398-5191
F (415) 394-7158

STRUCTURAL ENGINEER
DASSE DESIGN INC.
33 NEW MONTGOMERY STREET, SUITE 850
SAN FRANCISCO, CA 94105
T (415) 243-8400
F (415) 243-9165

M/E/P FIRE PROTECTION ENGINEERS
ALFA TECH
120 MONTGOMERY STREET, SUITE 715
SAN FRANCISCO, CA 94104
T (415) 788-6000
F (415) 788-6040

CIVIL ENGINEER
CREEGAN + D'ANGELO
2420 MARTIN ROAD, SUITE 380
FAIRFIELD, CA 94534-8610
T (707) 429-5300
F (707) 429-2086

LANDSCAPE ARCHITECT
MEYERS + SILBERBERG
1443 CORNELL AVENUE
BERKELEY, CA 94702
T (510) 559-2973
F (510) 898-0488

LAB ARCHITECT
AHSC McLLELLAN COPENHAGEN, LLC
160 PINE STREET, SUITE 505
SAN FRANCISCO, CA 94111
T (415) 490 0504
F (415) 676 5864

APPROVAL STAMP
IDENTIFICATION STAMP
DIVISION OF THE STATE ARCHITECT
APPL 02- 107417
AC FLS TH SS NL
DATE: 12/21/05

NO.	ISSUED FOR	DATE
1	DSA APPROVAL SET	12/08/05

LICENSED ARCHITECT ROY S. LATKA NO. C7256 REN. 7-31-07 STATE OF CALIFORNIA
CERTIFIED BY

K M D
KAPLAN McLAUGHLIN DIAZ
ARCHITECTURE PLANNING
222 VALLEJO SAN FRANCISCO, CA 94111
(415) 398-5191 FAX (415) 394-7158

AS BUILTS

SOLANO COMMUNITY COLLEGE

SCCD
VALLEJO CENTER
Contract # A003.6123.01.V1

PROJECT NO.	DATE
419-201	12-08-05

NOTES ABBREVIATIONS & DRAWING INDEX

A0.01

PLOT DATE:

COPYRIGHT © 2004 BY KMD (KAPLAN McLAUGHLIN DIAZ). ALL RIGHTS RESERVED.

PATH: G:\000\000-000\ACAD\SHEETS\

RFI-222 VERBAL DIRECTION SPRAY FIRE PROOF THIS STEEL BEAM

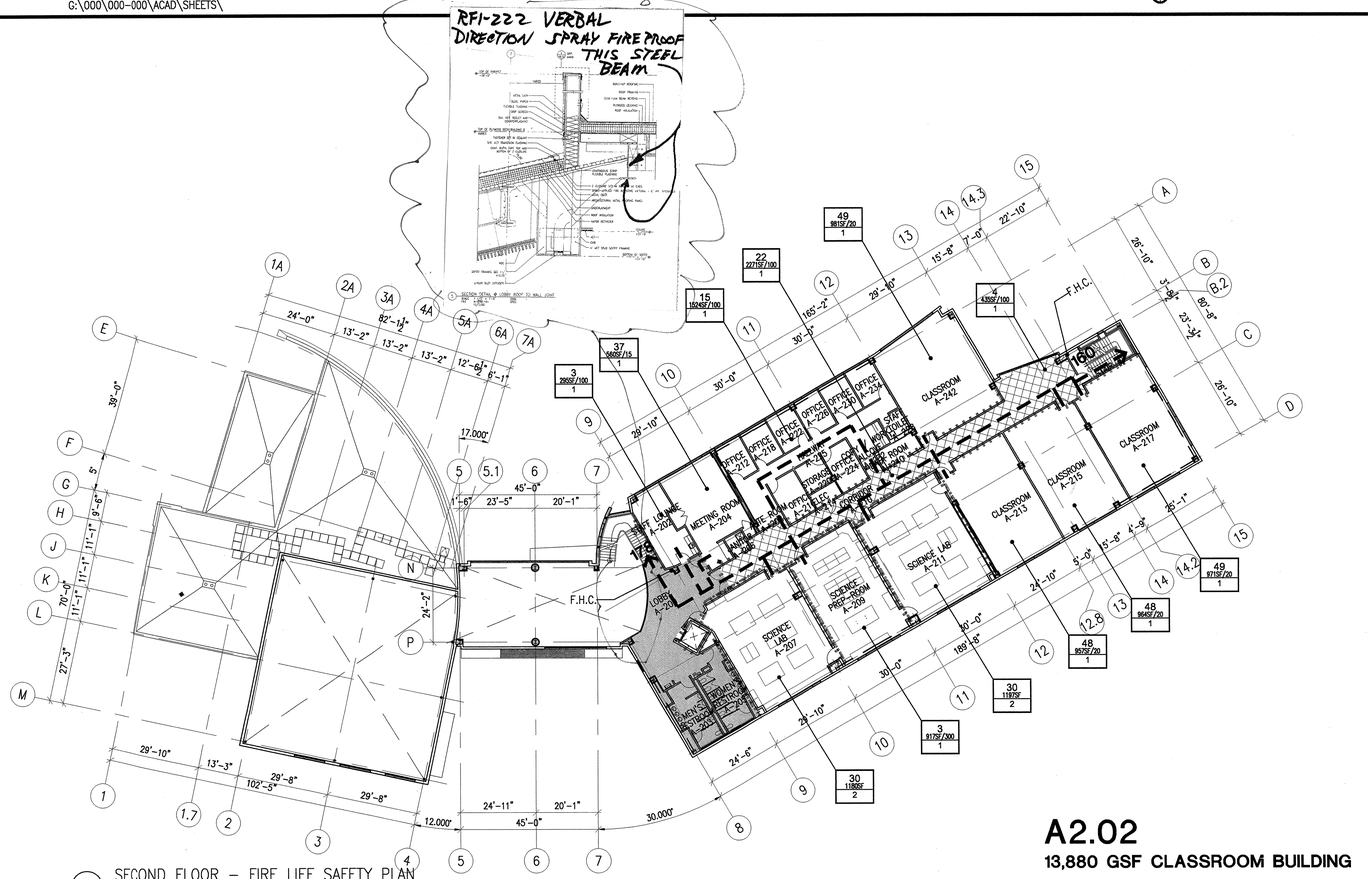

2 SECOND FLOOR – FIRE LIFE SAFETY PLAN
SCALE 1/20" = 1'-0"

A2.02
13,880 GSF CLASSROOM BUILDING

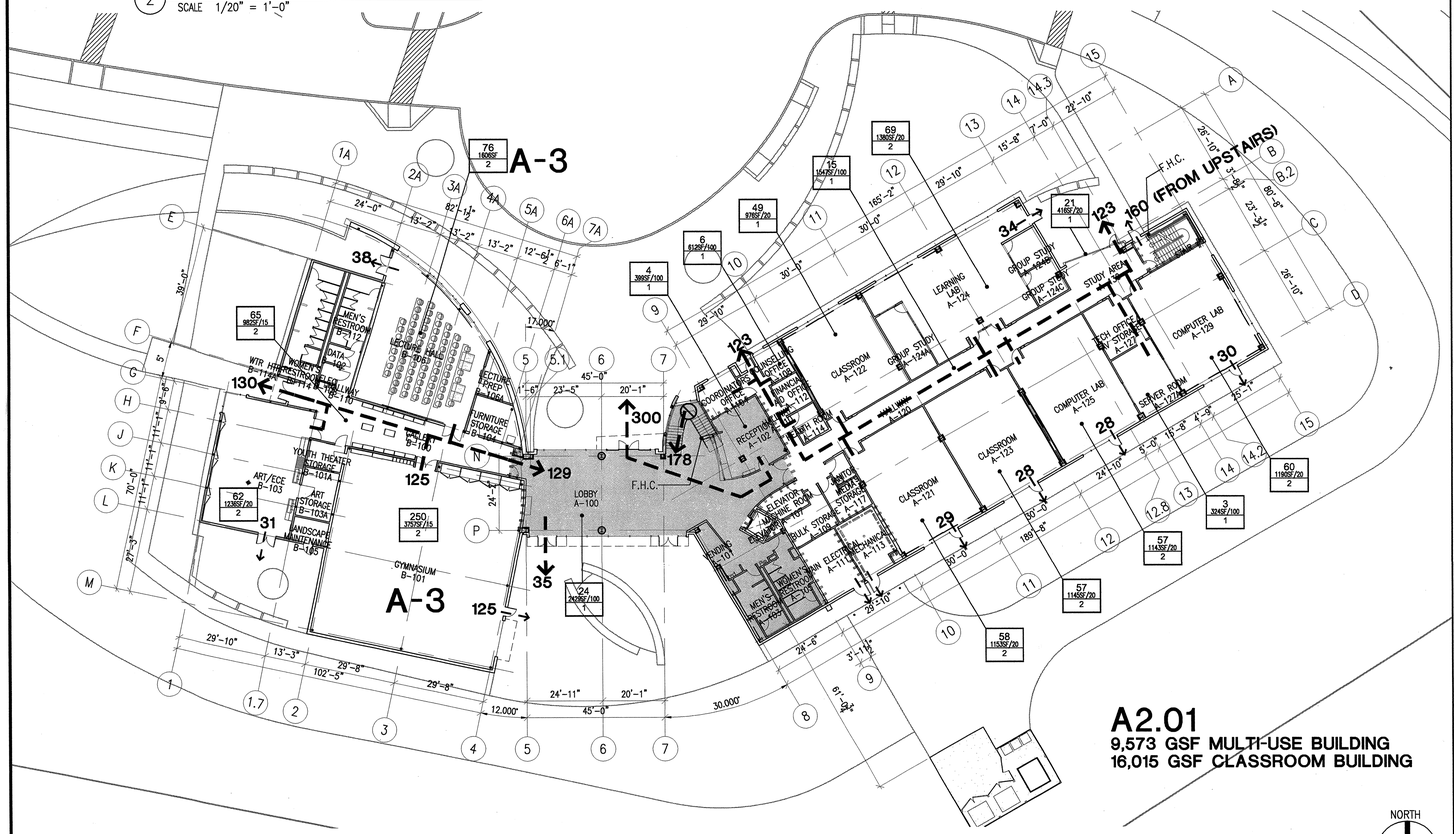

1 FIRST FLOOR – FIRE LIFE SAFETY PLAN
SCALE 1/20" = 1'-0"

A2.01
9,573 GSF MULTI-USE BUILDING
16,015 GSF CLASSROOM BUILDING

NORTH

BUILDING CODE SUMMARY

1. APPLICABLE REGULATIONS
   CALIFORNIA BUILDING CODE – 2001 EDITION
   NFPA 2002 NATIONAL ELECTRICAL CODE, 2004 CALIF. AMENDMENTS
   NFPA 13, SPRINKLER SYSTEMS, 1999 EDITION
   CALIFORNIA MECHANICAL CODE, 2001 EDITION
   CALIFORNIA PLUMBING CODE, 2001 EDITION
   CALIFORNIA FIRE CODE 2001 EDITION
   NFPA 24 1995 EDITION AND AMENDMENTS
   NFPA 72 1999 EDITION

   APPLICABLE STANDARDS
   UL – UNDERWRITERS LABORATORIES FIRE RESISTIVE DIRECTORY, 2002 EDITION
   UL – UNDERWRITERS LABORATORY BUILDING MATERIALS DIRECTORY, 2002 EDITION
   SMACNA – FIRE, SMOKE & RADIATION DAMPER INSTALLATION GUIDE FOR HVAC SYSTEMS, 3RD EDITION, 1986

2. FULLY FIRE SPRINKLERED

3. ALLOWABLE BUILDING AREA / HEIGHT
   CONSTRUCTION TYPE V–1 HR
   SUBSTITUTE SPRINKLERS FOR 1 HR. PER CBC SECTION 508
   ALLOWABLE HEIGHT (B) 3 STORYS
   ALLOWABLE HEIGHT (A–3) 2 STORY

   BASIC ALLOWABLE AREAS: A–3 10,500 (CBC 2001 TABLE 5B)
   B 14,000 (CBC 2001 TABLE 5B)

   AREA INCREASES: CBC 505.1.3 NO. OF STORIES X SEPARATION ALL SIDES = ALLOWABLE AREA

   AREA INCREASES (CBC 504.2 AND 505.1.3) A–3 10,500 x 1 x 2 = 21,000
   B 14,000 x 2 x 2 = 56,000

BUILDING	OCC. GROUP	AREA	NO. OCCUPANTS	NO. EXITS REQ.	NO. EXITS PROV.
SECOND FLOOR	B	13,880	338	2	2
FIRST FLOOR	A–3	5,363	326	2	17
	B	20,225	597		

TOTAL AREA 39,468

AREA PER OCCUPANCY GROUP A–3 5,363
B 34,105

HEIGHT PER OCCUPANCY GROUP A–3 1 STORY
B 1 & 2 STORY

ALLOWABLE AREA FOR MIXED OCCUPANCY (CBC 2001 SECTION 504.3):

$$\frac{5,363}{21,000} + \frac{34,105}{56,000} = 0.864 = < 1$$

3. EXIT WIDTHS
   CBC 2001 TABLE 10B, CATEGORY: ALL OTHER USES:
   STAIRWAYS .3 INCH PER PERSON
   OTHER EGRESS COMPONENTS .2 INCH PER PERSON

CLEARANCE REQUIRED		PROVIDED	MAX. CAPACITY
MAIN STAIR:	56"	56"	186
INTERIOR STAIR	48"	48"	160
EXIT SINGLE DOOR	32"	36"	160
EXIT DOUBLE DOOR	68"	72"	340

4. DEFERRED APPROVALS
   AUTOMATIC FIRE SPRINKLER SYSTEM
   ELEVATOR GUIDE RAILS AND SUPPORT BRACKETS
   WINDOW WALLS & SYSTEMS WITH SPANS OVER 10'
   UNDERGROUND FIRE SERVICE PLAN

5. FIRE RESISTIVE REQUIREMENTS (CBC 2001 TABLE 6A):
   CONSTRUCTION TYPE V–I HR
   SUBSTITUTE SPRINKLERS FOR ONE HOUR PER CBC SECTION 508
   (NOTE: CORRIDOR AND OCCUPANCY SEPARATIONS, WHERE REQUIRED, ARE NOT INCLUDED IN THE FIRE RESISTIVE SUBSTITUTIONS).

BUILDING ELEMENT	RATING
BEARING WALLS – EXTERIOR WALLS	NR
BEARING WALLS – INTERIOR	NR
NON–BEARING WALLS – EXTERIOR	NR
STRUCTURAL FRAME	NR
PARTITIONS – PERMANENT	NR
SHAFT ENCLOSURES	NR SECTION 711.3
FLOORS AND FLOOR–CEILINGS	NR
ROOF AND ROOF–CEILINGS	NR
EXTERIOR DOORS AND WINDOWS	NR SECTION 606.3
STAIRWAY CONSTRUCTION	NR SECTION 606.4

SEE SPECIFICATION SECTION 07840 FOR FIRE STOPPING.

6. OCCUPANT LOADS INDICATED ON THIS DRAWING ARE SOLELY FOR THE PURPOSE OF VERIFYING EGRESS REQUIREMENTS BY CODE. THESE LOADS ARE NOT INTENDED TO CONVEY STAFFING NUMBERS.

7. OCCUPANT LOADS ARE INDICATED FOR EACH AREA UNLESS OTHERWISE NOTED. OCCUPANT LOADS ARE CALCULATED BY AREA AND LOAD FACTORS FROM CBC TABLE 10–A.

8. ROOMS WITH A CUMULATIVE OCCUPANT LOAD LESS THAN 10 MAY ACCESS EXITS THROUGH MORE THAN ONE INTERVENING ROOM AS PER CBC 2001 SECTION 1004.2.2 EXCEPTION 3.

AUTOMATIC FIRE SPRINKLER DESIGN CRITERIA

GENERAL REQUIREMENTS FOR EDUCATIONAL OCCUPANCY (CA COMMUNITY COLLEGE) NFPA 13, 1999 ed. Sec. A–2.1

GENERAL CLASSROOM, OFFICES, AUDITORIUMS, LIBRARIES – LIGHT HAZARD

CAMPUS KITCHENS. LARGE STORAGE AREAS – ORDINARY HAZARD GROUP 1

STAGES, SCIENCE LABS/VOCATIONAL SHOPS – ORDINARY HAZARD GROUP 2

PLUMBING FIXTURES COUNT

MINIMUM PLUMBING FIXTURES AS PER 2001 CBC APPENDIX CHAPTER 29 TABLE A–29–A. SEE A2.01 FOR OCCUPANCY CALCULATIONS FOR VALLEJO CENTER BUILDING.

VALLEJO CENTER BUILDING OCCUPANCY SUMMARY

	TOTAL AREA X LOAD FACTOR	TOTAL OCCUPANTS	TOTAL MALE/FEMALE
ASSEMBLY USE (3756/15 + 75 FIXED)		325	163/163
COLLEGE USE (15059/50)		622	311/311

TOILET FIXTURE SUMMARY

	MALE OCCUPANTS	MALE WC	MALE URINAL*	MALE LAV
GROUP A.3	163	2	2	1
GROUP B	311	4	4	8
TOTAL MALE		6	6	9
	FEMALE OCCUPANTS	FEMALE WC		FEMALE LAV
GROUP A.3	163	6		1
GROUP B	311	10		8
TOTAL FEMALE		16		9

PROVISION FOR ADDITIONAL 5 CLASSROOM BUILDING

	TOTAL AREA X LOAD FACTOR	TOTAL OCCUPANTS	TOTAL MALE/FEMALE
ASSEMBLY USE (3800/15)		253	126/126
COLLEGE USE (2400/50)		48	24/24

REVISED TOILET FIXTURES WITH FIVE ADDITIONAL CLASSROOM PROVISION

	MALE OCCUPANTS	MALE WC	MALE URINAL*	MALE LAV
GROUP A.3	163+126	2	2	2
GROUP B	311+24	4	4	8
TOTAL MALE		6	6	10
	FEMALE OCCUPANTS	FEMALE WC		FEMALE LAV
GROUP A.3	163+126	8		2
GROUP B	311+24	11		8
TOTAL FEMALE		19		10

TOILET FIXTURE SUMMARY (WITH FIVE ADDITIONAL CLASSROOM PROVISION)

TOTAL MALE REQUIRED	6	6	10
TOTAL MALE PROVIDED	7	8	11
TOTAL FEMALE	19		10
TOTAL FEMALE PROVIDED	20		12

* WHERE URINALS ARE PROVIDED, ONE WATER CLOSET LESS THAN THE NUMBER SPECIFIED MAY BE PROVIDED FOR EACH URINAL INSTALLED, EXCEPT THE NUMBER OF WATER CLOSETS IN SUCH CASES SHALL NOT BE REDUCED TO LESS THAN ONE HALF OF THE MINIMUM SPECIFIED, AS PER TABLE A–29–A 2001 CBC APPENDIX CHAPTER 29.

GENERAL NOTES

1. ALL DIMENSIONS ARE TO FACE OF FINISH SURFACE OR CENTER LINE WHERE INDICATED, U.O.N.
2. FOR ALL DEFERRED APPROVAL ITEMS CONTRACTOR IS REQUIRED TO SUBMIT SHOP DRAWINGS AND STRUCTURAL CALCULATIONS STAMPED AND SIGNED BY A REGISTERED STRUCTURAL ENGINEER IN THE STATE OF CALIFORNIA. DEFERRED APPROVAL ITEMS REQUIRE ACCEPTANCE OF THE ARCHITECT AND APPROVAL OF DSA.

LOCAL FIRE AUTHORITY STAMP + SIGNATURE

SEE SHEET A1.02 FOR LOCAL FIRE AUTHORITY STAMP & SIGNATURE.

LEGEND

- 1–HR FIRE RATED WALL ASSEMBLY
  PROVIDE:
  1. 20 MINUTE FIRE RATED DOORS
  2. FIRE STOPPING AT PIPE AND DUCT PENETRATIONS
  3. FIRE/SMOKE DAMPERS AT DUCT PENETRATIONS
  4. SMOKE SEALS AT DOORS
  5. 45 MINUTE FIRE RATED WINDOWS
- 1–HR OCCUPANCY SEPARATION WALL
  PROVIDE:
  1. 60 MINUTE DOOR OPENING PROTECTION
  2. FIRE STOPPING AT PIPE AND DUCT PENETRATIONS
  3. FIRE/SMOKE DAMPERS AT DUCT PENETRATIONS
- INDICATED EXIT
- RATED CORRIDOR
- RATED LOBBY
- OCCUPANTS
- AREA/OCCUPANT LOAD FACTOR
- MIN. EXIT REQUIRED

APPROVAL STAMP
IDENTIFICATION STAMP
DIVISION OF THE STATE ARCHITECT
APP. 107417
FILE FLS PE SS NR
DATE: 12/21/05

NO.	ISSUED FOR	DATE
1	DSA APPROVAL SET	12/08/05

LICENSED ARCHITECT ROY S. LAPAZ NO. C7256 EXP. 7-31-07 STATE OF CALIFORNIA
CERTIFIED BY

K M D
KAPLAN McLAUGHLIN DIAZ
ARCHITECTURE PLANNING
222 VALLEJO SAN FRANCISCO, CA 94111
(415) 398-5191 FAX (415) 394-7158

AS BUILTS

SOLANO COMMUNITY COLLEGE

SCCD
VALLEJO CENTER
Contract # A003.6123.01.V1

PROJECT NO. 419–201
DATE 12–08–05

FIRE LIFE SAFETY PLANS & CODE SUMMARY

A0.02

COPYRIGHT © 2004 BY KMD (KAPLAN McLAUGHLIN DIAZ). ALL RIGHTS RESERVED.

PLOT DATE:

PATH: G:\000\000-000\ACAD\SHEETS\

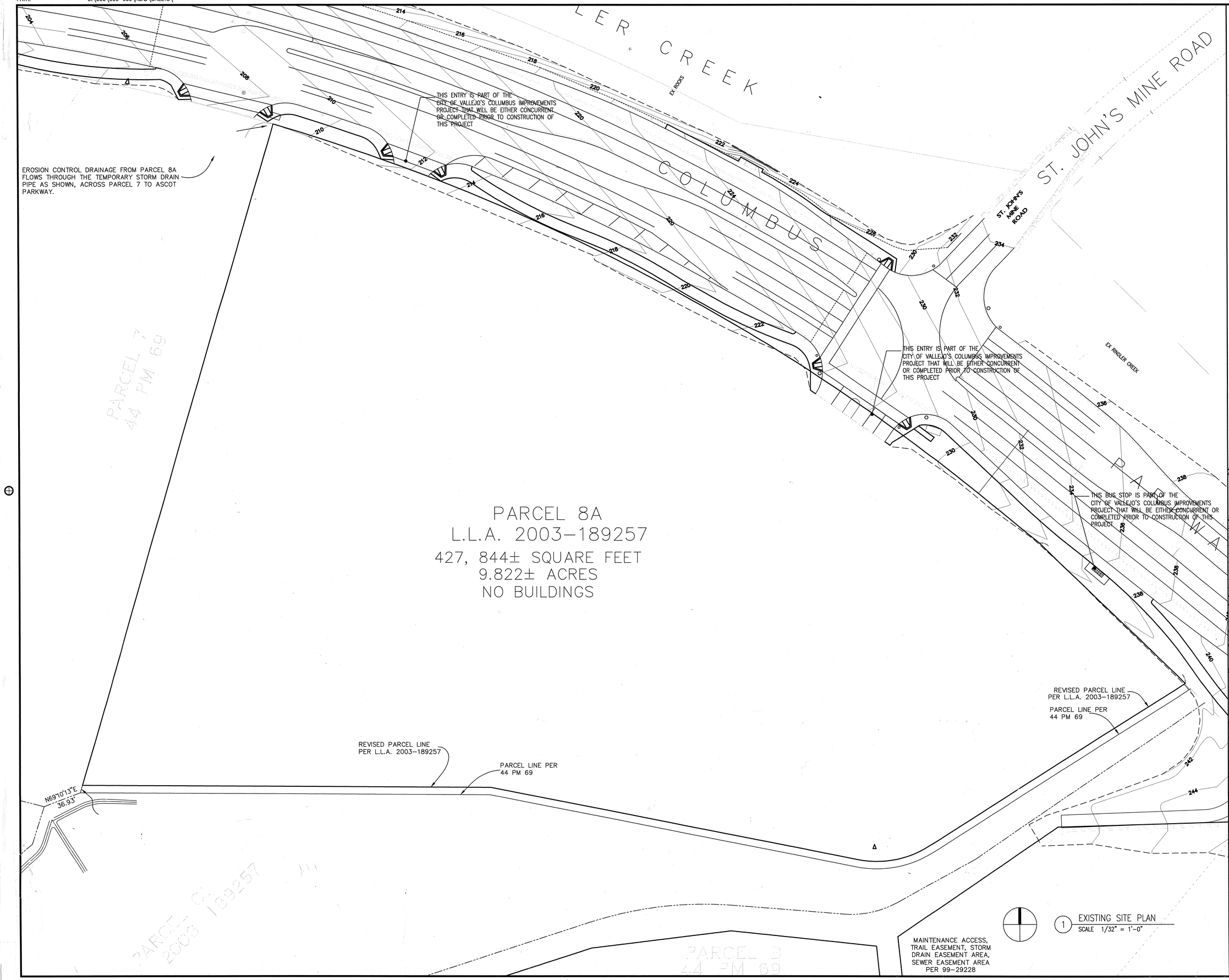

1 EXISTING SITE PLAN
SCALE 1/32" = 1'-0"

SHEET NOTES

1. THIS SITE PLAN IS BASED ON OWNER TOPOGRAPHIC SURVEY DATED NOVEMBER 17, 2003 AND CITY OF VALLEJO'S COLUMBUS IMPROVEMENTS PROJECT BID ADDENDUM #3 DATED 5/9/2005.

2. THIS SITE PLAN SHOWS FUTURE WORK ON COLUMBUS PARKWAY THAT WILL BE DONE EITHER CONCURRENT OR BEFORE THIS PROJECT. CONTRACTOR WILL NEED TO VERIFY AND COORDINATE ALL SITE CONDITIONS ALONG COLUMBUS PARKWAY FOR ANY CONFLICTS AND NOTIFY OWNER OF ANY DISCREPANCIES.

APPROVAL STAMP
IDENTIFICATION STAMP
DIVISION OF THE STATE ARCHITECT
APPL. 02- 107417
ACC. FLS. SS.
DATE: 12/21/05

NO.	ISSUED FOR	DATE
1	DSA APPROVAL SET	12/08/05

LICENSED ARCHITECT
ROY S. LADRY
NO. C7256
REN. 7-31-07
STATE OF CALIFORNIA
CERTIFIED BY

K M D
KAPLAN McLAUGHLIN DIAZ
ARCHITECTURE PLANNING
222 VALLEJO SAN FRANCISCO, CA 94111
(415) 398-5191 FAX (415) 394-7158

SOLANO COMMUNITY COLLEGE

SCCD
VALLEJO CENTER
Contract # A003.6123.01.V1

PROJECT NO.	DATE
419-201	12-08-05

EXISTING SITE PLAN
AS BUILTS

A1.01

PLOT DATE:

COPYRIGHT © 2004 BY KMD (KAPLAN McLAUGHLIN DIAZ). ALL RIGHTS RESERVED.

PATH: G:\000\000-000\ACAD\SHEETS\

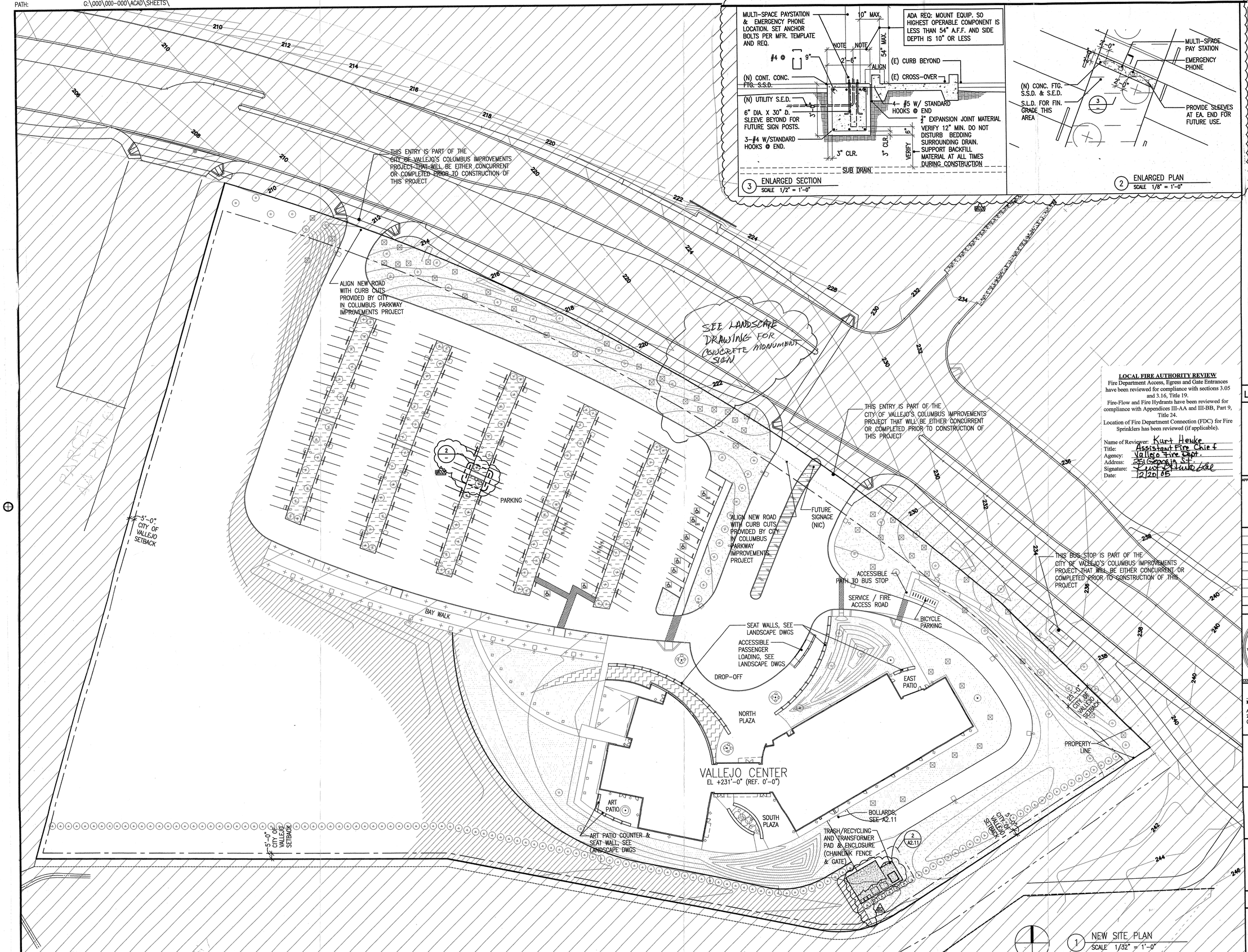

SHEET NOTES

1. THIS SITE PLAN SHOWS FUTURE WORK ON COLUMBUS PARKWAY THAT WILL BE DONE EITHER CONCURRENT OR BEFORE THIS PROJECT. CONTRACTOR WILL NEED TO VERIFY AND COORDINATE ALL SITE CONDITIONS ALONG COLUMBUS PARKWAY FOR ANY CONFLICTS AND NOTIFY OWNER OF ANY DISCREPANCIES.
2. 0'-0" CITY DATUM ELEVATION +231.00'
3. SEE CIVIL DRAWINGS FOR LOCATION OF BUILDING ON SITE.
4. SEE CIVIL, LANDSCAPE & MEP DRAWINGS FOR FULL SCOPE OF SITE WORK.
5. SEE SHEET A1.30 FOR SITE SIGNAGE AND ACCESSIBLE PATH OF TRAVEL.
6. PARKING COUNT:

196 CAR SPACES
8 ADA SPACES
2 ADA VAN SPACES
6 MOTORCYCLE SPACES

GRAPHIC LEGEND

NOT IN CONTRACT EXCEPT SEE CIVIL AND LANDSCAPE FOR WORK IN CITY'S RIGHT OF WAY

LOCAL FIRE AUTHORITY REVIEW

Fire Department Access, Egress and Gate Entrances have been reviewed for compliance with sections 3.05 and 3.16, Title 19.

Fire-Flow and Fire Hydrants have been reviewed for compliance with Appendices III-AA and III-BB, Part 9, Title 24.

Location of Fire Department Connection (FDC) for Fire Sprinklers has been reviewed (if applicable).

Name of Reviewer: Kurt Henke
Title: Assistant Fire Chief
Agency: Vallejo Fire Dept.
Address: 201 Georgia St
Signature: Kurt Henke
Date: 12/20/05

LOCAL FIRE AUTHORITY APPROVAL

APPROVED
DATE: 12/20/05
BY: Kurt Henke/dlw

APPROVAL STAMP
IDENTIFICATION STAMP
DIVISION OF THE STATE ARCHITECT
APPL 02- 107417
AC FLS TH SS NC
DATE: 12/21/05

NO.	ISSUED FOR	DATE
1	DSA APPROVAL SET	12/08/05

LICENSED ARCHITECT TROY S. LAVIA No. C7256 REN. 7-31-07 STATE OF CALIFORNIA

CERTIFIED BY

APPROVED
DIV. OF THE STATE ARCHITECT
SACRAMENTO REGIONAL OFFICE
AC F/LS SS TH
APP. # 107417 DATE 7-24-07

K M D
KAPLAN McLAUGHLIN DIAZ
ARCHITECTURE PLANNING
222 VALLEJO SAN FRANCISCO, CA 94111
(415) 788-0290 FAX (415) 394-7158

☐ APPROVED AS NOTED
☐ IMPLEMENT EXCEPTIONS NOTED
☐ REVISE AND RESUBMIT
☐ REJECTED

This conditional review is limited to scope and not detailed and is only for conformance with the design concept and general compliance with the information given in the Contract Documents. The Contractor is responsible for confirming quantities, verifying dimensions, selecting fabrication processes and construction techniques, and coordinating and safely performing the Work. The Architect has not reviewed and is not responsible for substitutions to or deviations from the Contract Documents not clearly noted by the Contractor and specifically accepted by the Architect in writing or by the Architect's issuance of an Information Bulletin.

BY KAPLAN DATE 7/30/2007 DIAZ

SOLANO COMMUNITY COLLEGE

SCCD
VALLEJO CENTER
Contract # A003.6123.01.V1

PROJECT NO.	DATE
419-201	12-08-05

NEW SITE PLAN

A1.02

COPYRIGHT © 2004 BY KMD (KAPLAN McLAUGHLIN DIAZ). ALL RIGHTS RESERVED.

PLOT DATE:

PATH: G:\000\000-000\ACAD\SHEETS\

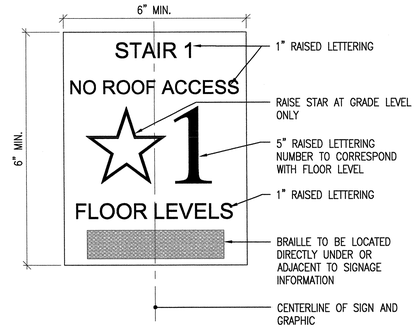

NOTE: CHARACTERS ON SIGNS SHALL HAVE A WIDTH-TO-HEIGHT RATIO OF BETWEEN 3:5 AND 1:1 AND A STROKE WIDTH TO HEIGHT RATIO OF BETWEEN 1:5 ANDN 1:10.

13 SIGN TYPE B: STAIRWAY SIGNAGE INFORMATION
SCALE 3"=1'-0" CODE 2001 UBC
FILE 10430-07-GS SPEC 1003.3.3.13

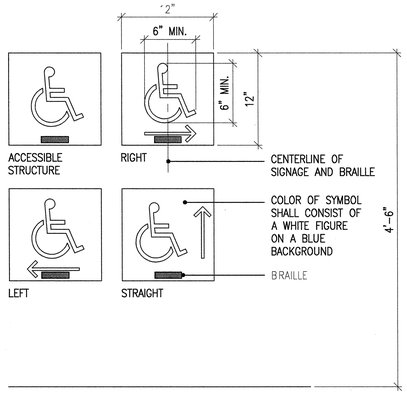

10 SIGN- DIRECTIONAL WALL SYMBOLS
SCALE 1 1/2"=1'-0" CODE 2001 CBC
FILE 10990-05-GS SPEC

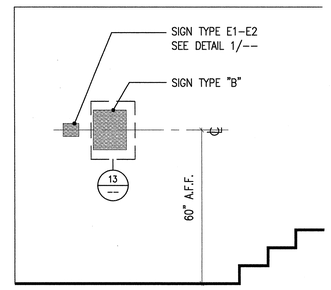

7 STAIRWELL
SCALE 1/4"=1'-0" CODE 2001 CBC
FILE 10430-18-GS SPEC

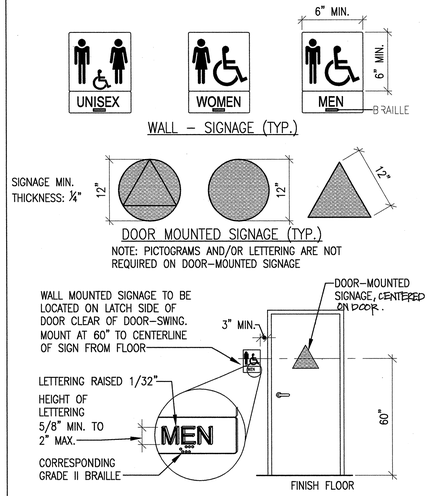

4 RESTROOM SIGNAGE
SCALE 1 1/2"=1'-0" CODE 2001 CBC
FILE 10990-21-GS SPEC

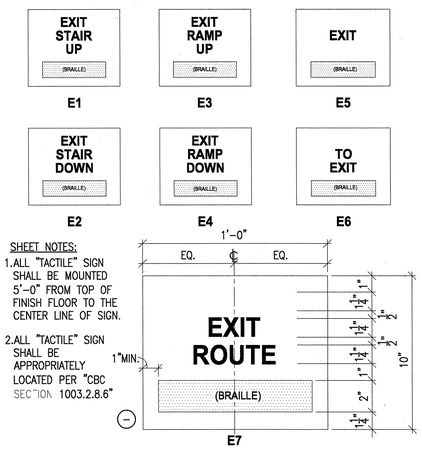

1 SIGN TYPE E: EXIT SIGNAGE
SCALE 3"=1'-0" CODE 2001 CBC
FILE 10990-20-GS SPEC

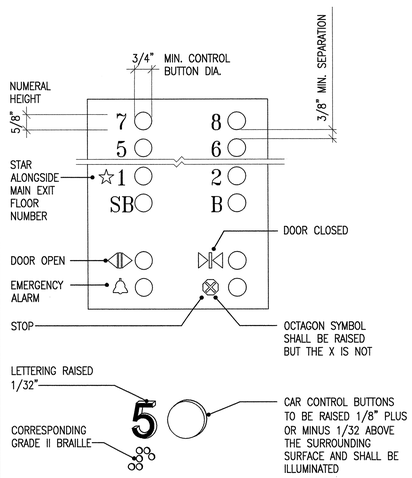

14 ELEVATOR PANEL DETAIL
SCALE 1/4"=1'-0" CODE 2001 CBC
FILE 10990-04-GS SPEC

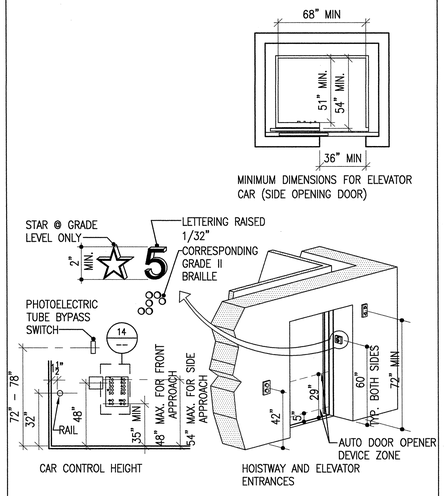

11 ELEVATOR ACCESSIBILITY
SCALE 1/4"=1'-0" CODE 2001 CBC
FILE 10990-03-GS SPEC

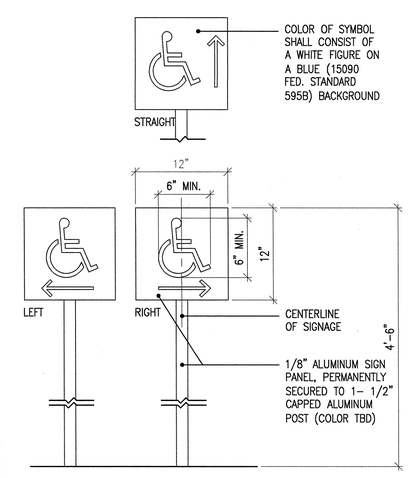

8 SIGN TYPE A: FREESTANDING ACCESSIBLE PATH
SCALE 1 1/2" = 1'-0" CODE
FILE A1.21 ACCESSIBILITY DIAGRAMS SPEC
12/15/05

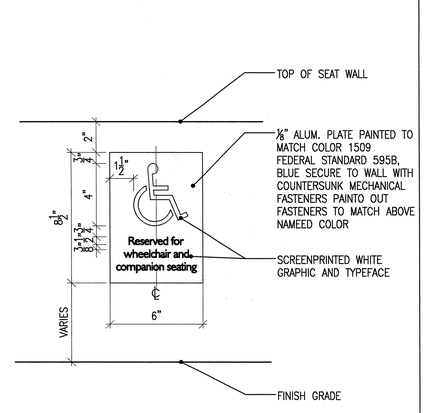

5 SIGN TYPE C: ACCESSIBLE SEATING @ SEAT WALLS
SCALE 3" = 1'-0" CODE
FILE A-DTEW-58 SPEC
12/15/05

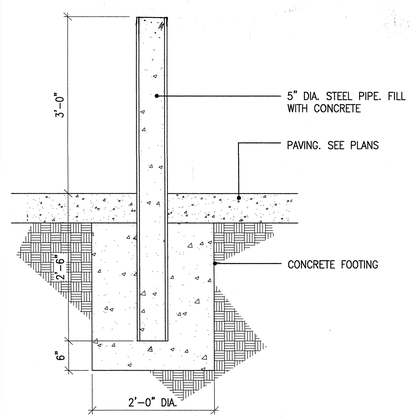

9 BOLLARD DETAIL
SCALE 1"=1'-0" CODE
FILE 02840-01-GS SPEC

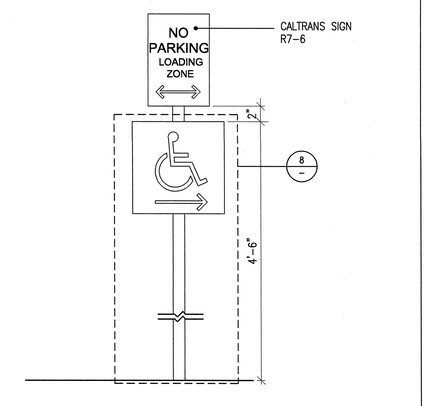

6 SIGN TYPE G: ACCESSIBLE PASSENGER LOADING
SCALE 1 1/2" = 1'-0" CODE
FILE A1.21 ACCESSIBILITY DIAGRAMS SPEC
12/15/05

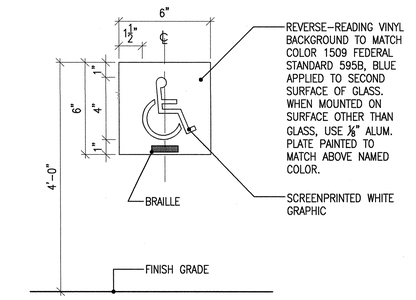

3 SIGN TYPE F: ACCESSIBLE ENTRY ID
SCALE 3" = 1'-0" CODE
FILE A-DTEW-57 SPEC
12/15/05

APPROVAL STAMP
IDENTIFICATION STAMP
DIVISION OF THE STATE ARCHITECT
APPL 02- 107417
AC FLS PH SS ML
DATE: 12/21/05

NO.	ISSUED FOR	DATE
1	DSA APPROVAL SET	12/08/05

LICENSED ARCHITECT ROY S. LAPKA NO. C7256 REN. 7-31-07 STATE OF CALIFORNIA
CERTIFIED SPECIAL INSPECTOR

K M D
KAPLAN McLAUGHLIN DIAZ
ARCHITECTURE PLANNING
222 VALLEJO SAN FRANCISCO, CA 94111
(415)398-5191 FAX (415)394-7158

SOLANO COMMUNITY COLLEGE

SCCD
VALLEJO CENTER
Contract # A003.6123.01.V1

PROJECT NO. 419-201
DATE 12-08-05

SITE & SIGNAGE DETAILS
AS BUILTS

A1.21

PLOT DATE:

COPYRIGHT © 2004 BY KMD (KAPLAN McLAUGHLIN DIAZ). ALL RIGHTS RESERVED.

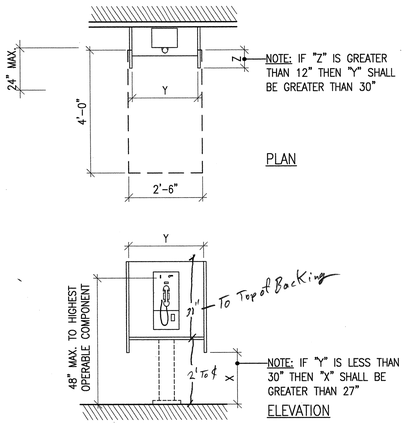

13 ACCESSIBLE TELEPHONE – FORWARD REACH
SCALE 1/2"=1'-0" CODE 2001 CBC
FILE 10990-01-PT SPEC

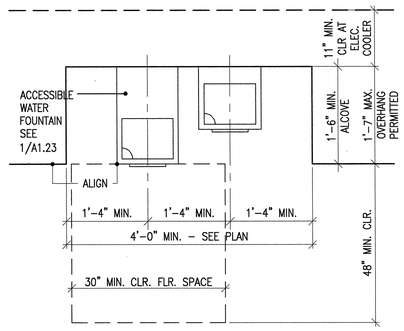

4 ACCESSIBLE HI-LO WATER FOUNTAIN AT ALCOVE
SCALE 1"=1'-0" CODE 2001 CBC
FILE 10969-03-PT SPEC

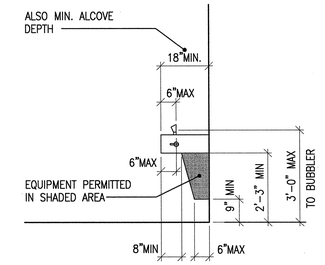

1 ACCESSIBLE WATER FOUNTAIN DIMENSIONS
SCALE 1/2"=1'-0" CODE 2001 CBC
FILE 10960-01-PT SPEC

SHEET NOTES

TOILET ACCESSORIES ARE OWNER FURNISHED OWNER INSTALLED. ACCESSORIES SHOWN ON THIS SHEET FOR COORDINATION OF BACKING AND MOUNTING HEIGHTS ONLY.

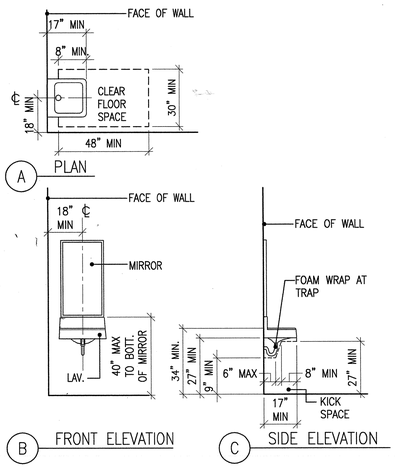

14 LAVATORY DIAGRAM
SCALE 3/8"=1'-0" CODE
FILE 10960-04-GS SPEC

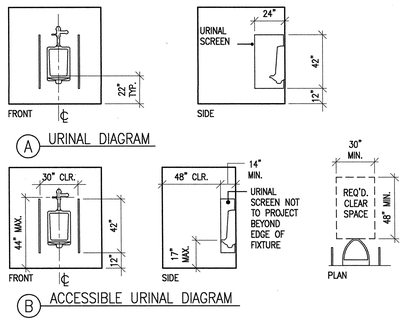

11 URINAL STANDARDS
SCALE 1/4"=1'-0" CODE 2001 UBC
FILE 10960-03-GS SPEC

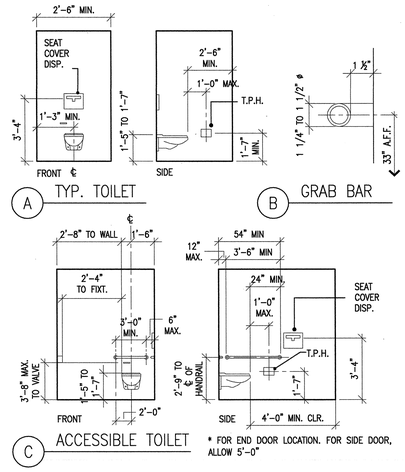

8 TOILET STANDARDS
SCALE 1/4"=1'-0" CODE
FILE 10960-02-GS SPEC

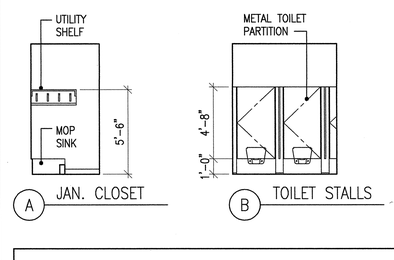

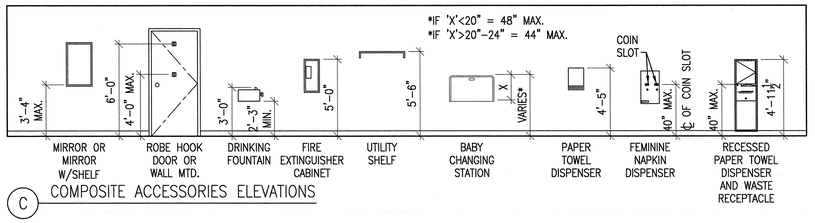

C COMPOSITE ACCESSORIES ELEVATIONS

5 FIXTURES ELEVATION DIAGRAM
SCALE 1/4"=1'-0" CODE 2001 CBC
FILE 10960-01-GS SPEC

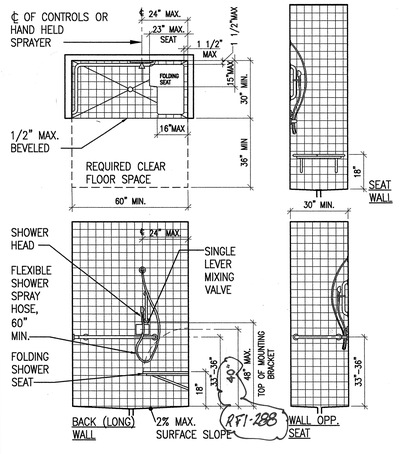

3 ACCESSIBLE SHOWER- T 24 CALIFORNIA
SCALE 1/8"=1'-0" CODE 2001 CBC
FILE 10960-08-GS SPEC

APPROVAL STAMP
IDENTIFICATION STAMP
DIVISION OF THE STATE ARCHITECT
APPL. 02- 107417
ACCESS FLS SS
DATE: 12/21/05

NO.	ISSUED FOR	DATE
1	DSA APPROVAL SET	12/08/05

LICENSED ARCHITECT ROY S. LAWS NO. C7256 REN. 7-31-07 STATE OF CALIFORNIA
CERTIFIED ACCESS SPECIALIST

K M D
KAPLAN McLAUGHLIN DIAZ
ARCHITECTURE PLANNING
222 VALLEJO SAN FRANCISCO, CA 94111
(415) 398-5191 FAX (415) 394-7158

SOLANO COMMUNITY COLLEGE

SCCD
VALLEJO CENTER
Contract # A003.6123.01.V1

PROJECT NO. 419-201
DATE 12-08-05

TYPICAL MOUNTINGS
AS BUILTS

A1.23

COPYRIGHT © 2004 BY KMD (KAPLAN McLAUGHLIN DIAZ). ALL RIGHTS RESERVED.

PATH: G:\000\000-000\ACAD\SHEETS\

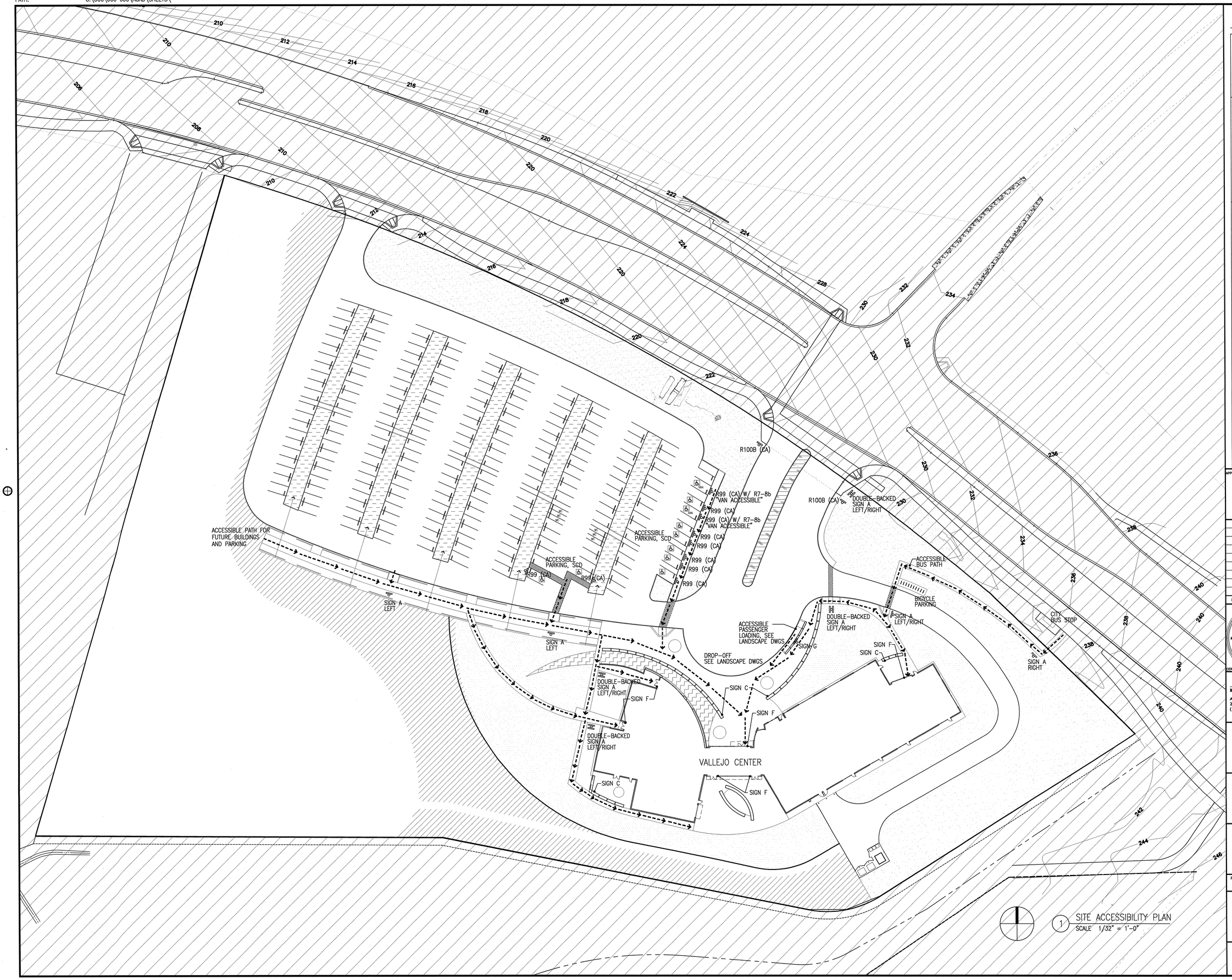

1 SITE ACCESSIBILITY PLAN
SCALE 1/32" = 1'-0"

SHEET NOTES

GRAPHIC LEGEND

NOT IN CONTRACT EXCEPT SEE CIVIL AND LANDSCAPE FOR WORK IN CITY'S RIGHT OF WAY

ACCESSIBLE PATH OF TRAVEL

SIGN LEGEND

R99 (CA)	CALTRANS STANDARD DISABLED ACCESSIBLE PARKING SIGN, SEE DETAIL K/C1.04 FOR DETAILS
R7-8b	CALTRANS STANDARD DISABLED VAN ACCESSIBLE PARKING SIGN, SEE DETAIL K/C1.04 FOR DETAILS
R100B (CA)	CALTRANS STANDARD "UNAUTHORIZED VEHICLES NOT DISPLAYING DISTINGUISHING PLACARDS ETC. ETC."
SIGN A	FREESTANDING ACCESSIBLE PATH OF TRAVEL DIRECTIONAL SIGNS, SEE DETAIL 8/A1.21
SIGN C	RESERVED SEATING SIGN, SEE DETAIL 5/A1.21
SIGN F	ACCESSIBLE ENTRY ID, SEE DETAIL 3/A1.21
SIGN G	FREESTANDING ACCESSIBLE PATH OF TRAVEL DIRECTIONAL SIGN WITH CALTRANS SIGN R7-6 (NO PARKING, LOADING ZONE), SEE DETAIL 6/A1.21

APPROVAL STAMP
IDENTIFICATION STAMP
DIVISION OF THE STATE ARCHITECT
APPL. NO. 107417
ACT. FLS. TH SS NL
DATE: 12/21/05

NO.	ISSUED FOR	DATE
1	DSA APPROVAL SET	12/08/05

LICENSED ARCHITECT ROY S. LATKA NO. C7256 REN. 7-31-07 STATE OF CALIFORNIA

CERTIFIED BY

K M D
KAPLAN McLAUGHLIN DIAZ
ARCHITECTURE PLANNING
222 VALLEJO SAN FRANCISCO, CA 94111
(415) 398-5191 FAX (415) 394-7158

SOLANO COMMUNITY COLLEGE

SCCD
VALLEJO CENTER
Contract # A003.6123.01.V1

PROJECT NO. 419-201
DATE 12-08-05

SITE SIGNAGE PLAN & ACCESSIBLE PATH OF TRAVEL

A1.30

PLOT DATE:

COPYRIGHT © 2004 BY KMD (KAPLAN McLAUGHLIN DIAZ). ALL RIGHTS RESERVED.

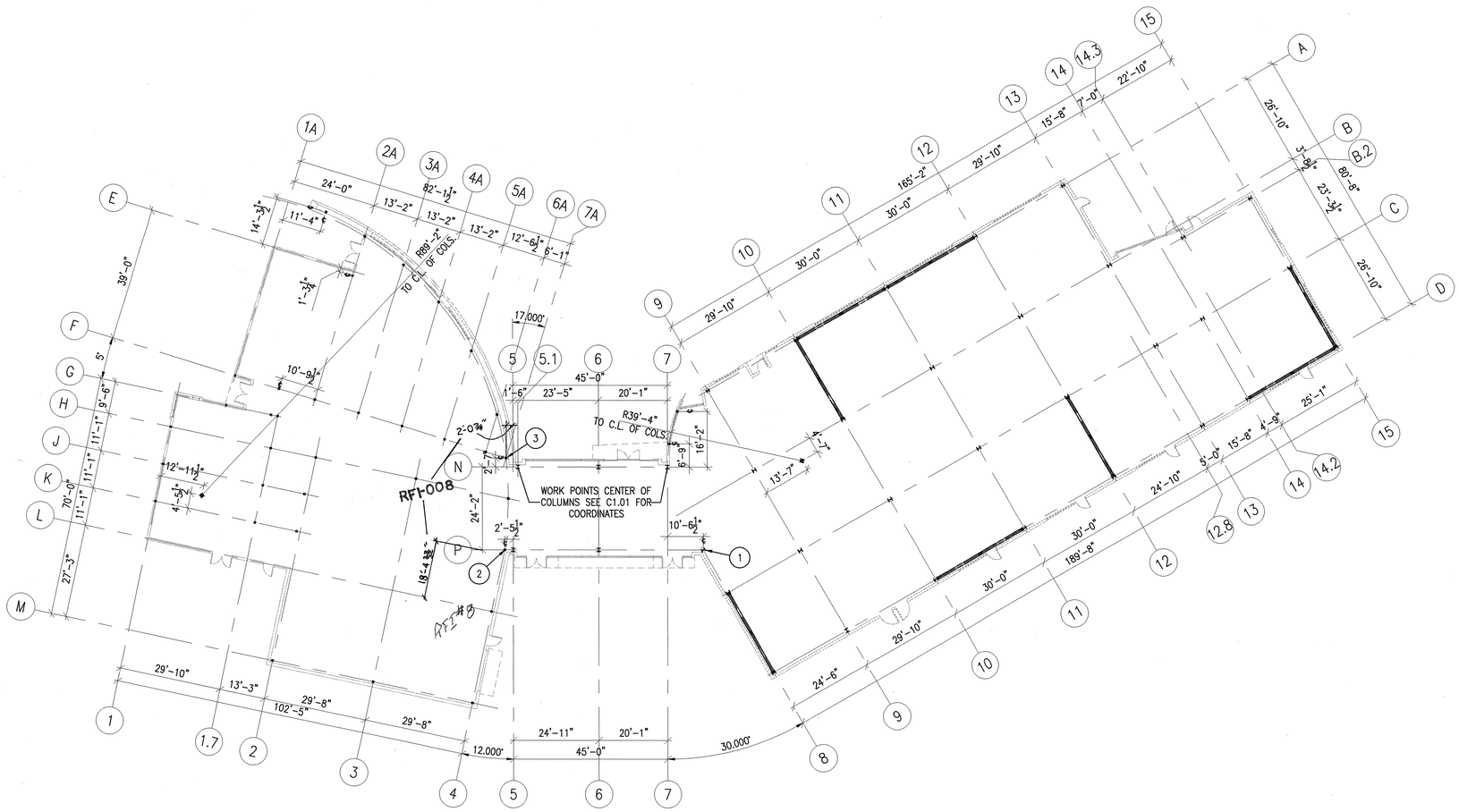

KEY NOTES

1. SPRINGPOINT FOR GRID ON 30 DEGREE ANGLE
2. SPRINGPOINT FOR GRID ON 12 DEGREE ANGLE
3. SPRINGPOINT FOR GRID ON 17 DEGREE ANGLE

SHEET NOTES

SEE STRUCTURAL DRAWINGS FOR SLAB ON GRADE DEPRESSIONS, BUILT-UP SECTIONS, RAMPS, AND OTHER INFORMATION.

1 BASIC GRID GEOMETRY
SCALE 1/16"=1'-0"

APPROVAL STAMP
IDENTIFICATION STAMP
DIVISION OF THE STATE ARCHITECT
APPL. NO. 107417
ACCESS FLS TH SS MC
DATE: 12/2/05

NO.	ISSUED FOR	DATE
1	DSA APPROVAL SET	12/08/05

LICENSED ARCHITECT ROY S. LADICH NO. C7256 REN. 7-31-07 STATE OF CALIFORNIA
CERTIFIED BY

K M D
KAPLAN McLAUGHLIN DIAZ
ARCHITECTURE PLANNING
222 VALLEJO SAN FRANCISCO, CA 94111
(415) 398-5191 FAX (415) 394-7158

SOLANO COMMUNITY COLLEGE

SCCD
VALLEJO CENTER
Contract # A003.6123.01.V1

PROJECT NO. 419-201
DATE 12-08-05

GRID GEOMETRY PLAN
AS BUILTS

A2.00

PLOT DATE:

COPYRIGHT © 2004 BY KMD (KAPLAN McLAUGHLIN DIAZ). ALL RIGHTS RESERVED.

PATH: G:\000\000-000\ACAD\SHEETS\

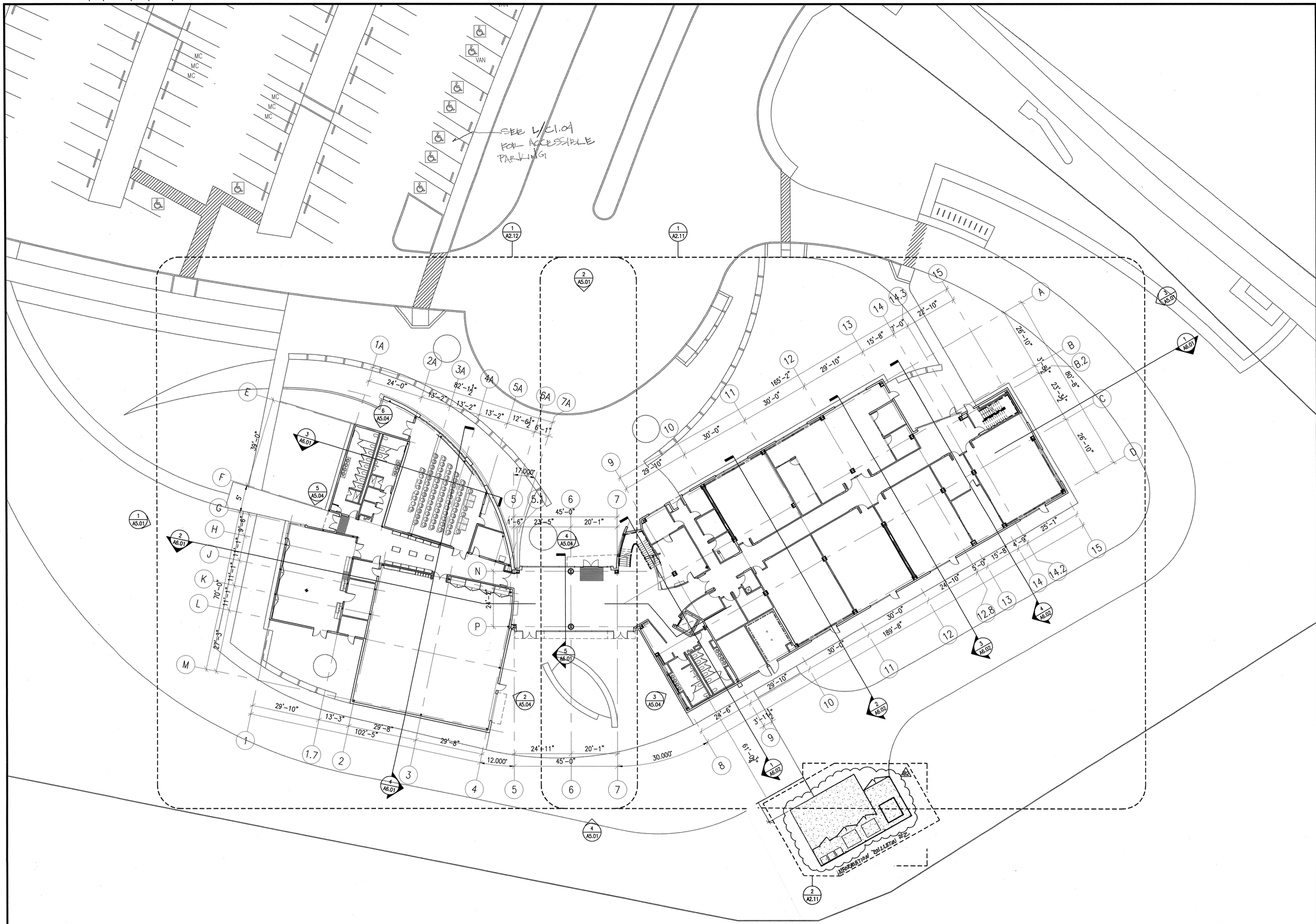

1 FIRST FLOOR PLAN
SCALE 1/16"=1'-0"

APPROVAL STAMP
IDENTIFICATION STAMP
DIVISION OF THE STATE ARCHITECT
APP. 02- 107417
DATE: 12/21/05

NO.	ISSUED FOR	DATE
1	DSA APPROVAL SET	12/08/05

LICENSED ARCHITECT
ROY S. KAPLAN
NO. C7256
REN. 7-31-07
STATE OF CALIFORNIA
CERTIFIED BY:

K M D
KAPLAN McLAUGHLIN DIAZ
ARCHITECTURE PLANNING
222 VALLEJO SAN FRANCISCO, CA 94111
(415) 398-5191 FAX (415) 394-7158

SOLANO COMMUNITY COLLEGE

SCCD
VALLEJO CENTER
Contract # A003.6123.01.V1

PROJECT NO. 419-201
DATE 12-08-05

FIRST FLOOR PLAN
AS BUILTS

A2.01

PLOT DATE:

COPYRIGHT © 2004 BY KMD (KAPLAN McLAUGHLIN DIAZ). ALL RIGHTS RESERVED.

PATH: G:\000\000-000\ACAD\SHEETS\

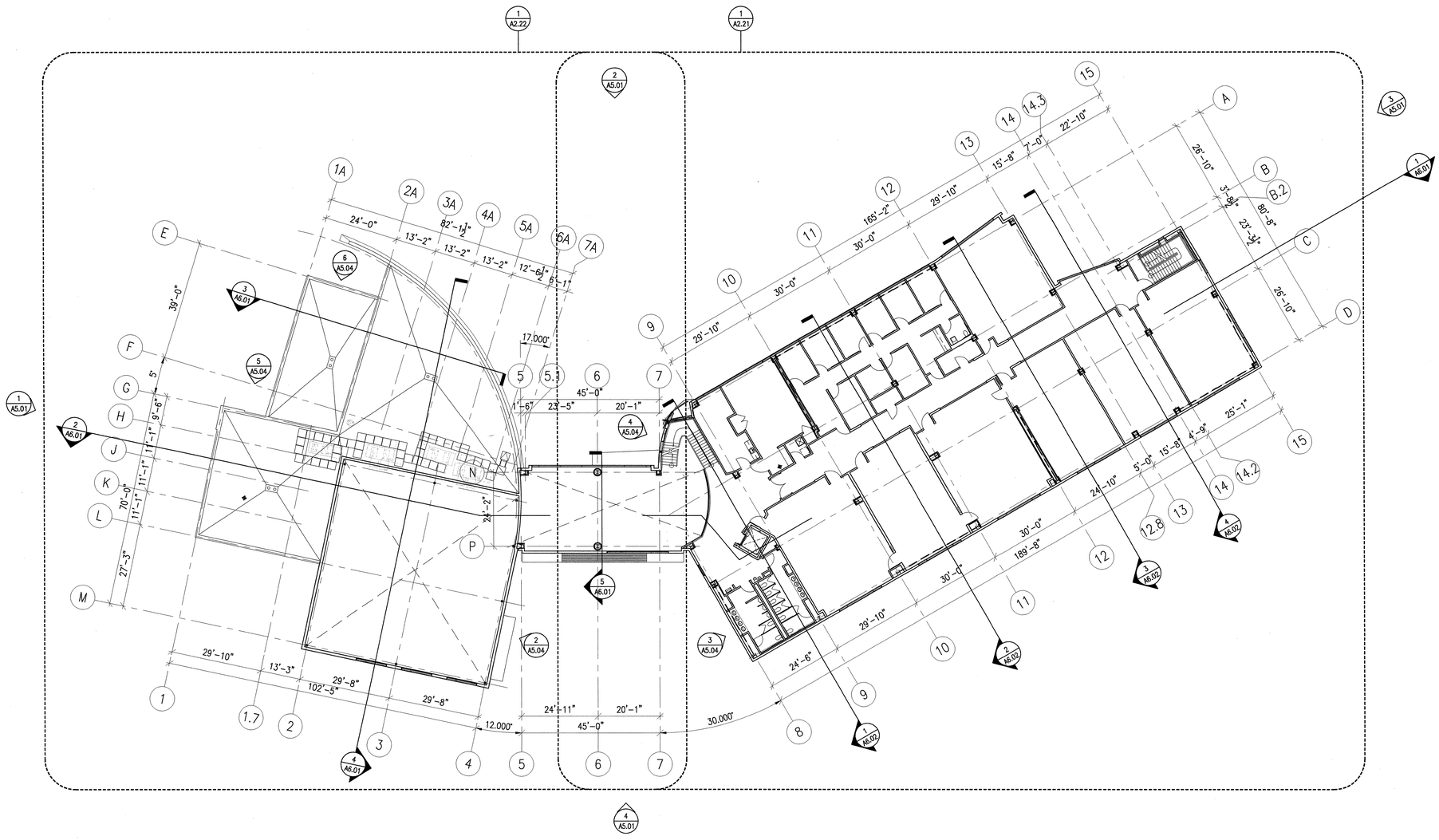

1 SECOND FLOOR PLAN
SCALE 1/16" = 1'-0"

APPROVAL STAMP
IDENTIFICATION STAMP
DIVISION OF THE STATE ARCHITECT
APP. 02- 107417
FLS SS
DATE: 12/4/05

NO.	ISSUED FOR	DATE
1	DSA APPROVAL SET	12/08/05

LICENSED ARCHITECT
ROY S. LATKO
NO. C7256
REN. 7-31-07
STATE OF CALIFORNIA
CERTIFIED BY:

K M D
KAPLAN McLAUGHLIN DIAZ
ARCHITECTURE PLANNING
222 VALLEJO SAN FRANCISCO, CA 94111
(415)398-5191 FAX (415)394-7158

SOLANO COMMUNITY COLLEGE

SCCD
VALLEJO CENTER
Contract # A003.6123.01.V1

PROJECT NO. 419-201
DATE 12-08-05

SECOND FLOOR PLAN
AS BUILTS

A2.02

PLOT DATE:

COPYRIGHT © 2004 BY KMD (KAPLAN McLAUGHLIN DIAZ). ALL RIGHTS RESERVED.

PATH: G:\000\000-000\ACAD\SHEETS\

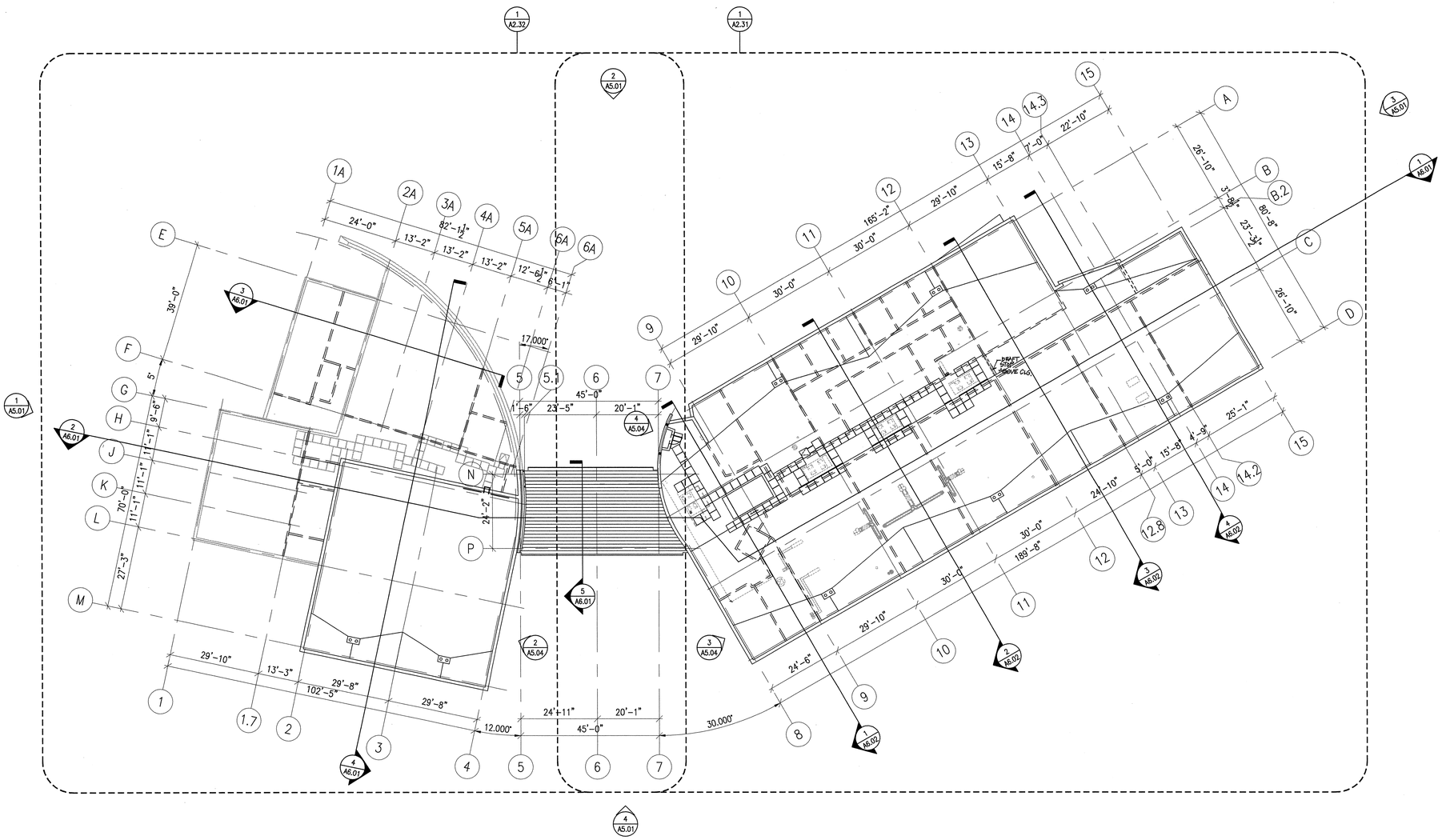

1 ROOF PLAN
SCALE 1/16" = 1'-0"

SHEET NOTES

= = = DASHED LINES INDICATE LOCATION OF "ATTIC" DRAFT STOPS, (FULL HEIGHT WALLS), BELOW ROOF.

APPROVAL STAMP
IDENTIFICATION STAMP
DIVISION OF THE STATE ARCHITECT
APPL 02- 107417
AC FLS SS
DATE: 12/25/05

NO.	ISSUED FOR	DATE
1	DSA APPROVAL SET	12/08/05

LICENSED ARCHITECT ROY S. LATKA NO. C7256 REN. 7-31-07 STATE OF CALIFORNIA
CERTIFIED BY:

K M D
KAPLAN McLAUGHLIN DIAZ
ARCHITECTURE PLANNING
222 VALLEJO SAN FRANCISCO, CA 94111
(415) 398-5191 FAX (415) 394-7158

SOLANO COMMUNITY COLLEGE

SCCD
VALLEJO CENTER
Contract # A003.6123.01.V1

PROJECT NO. 419-201
DATE 12-08-05

ROOF PLAN
AS BUILTS

A2.03

PLOT DATE:

COPYRIGHT © 2004 BY KMD (KAPLAN McLAUGHLIN DIAZ). ALL RIGHTS RESERVED.

PATH: G:\000\000-000\ACAD\SHEETS\

SEE SHEET A2.12 FOR CONTINUATION

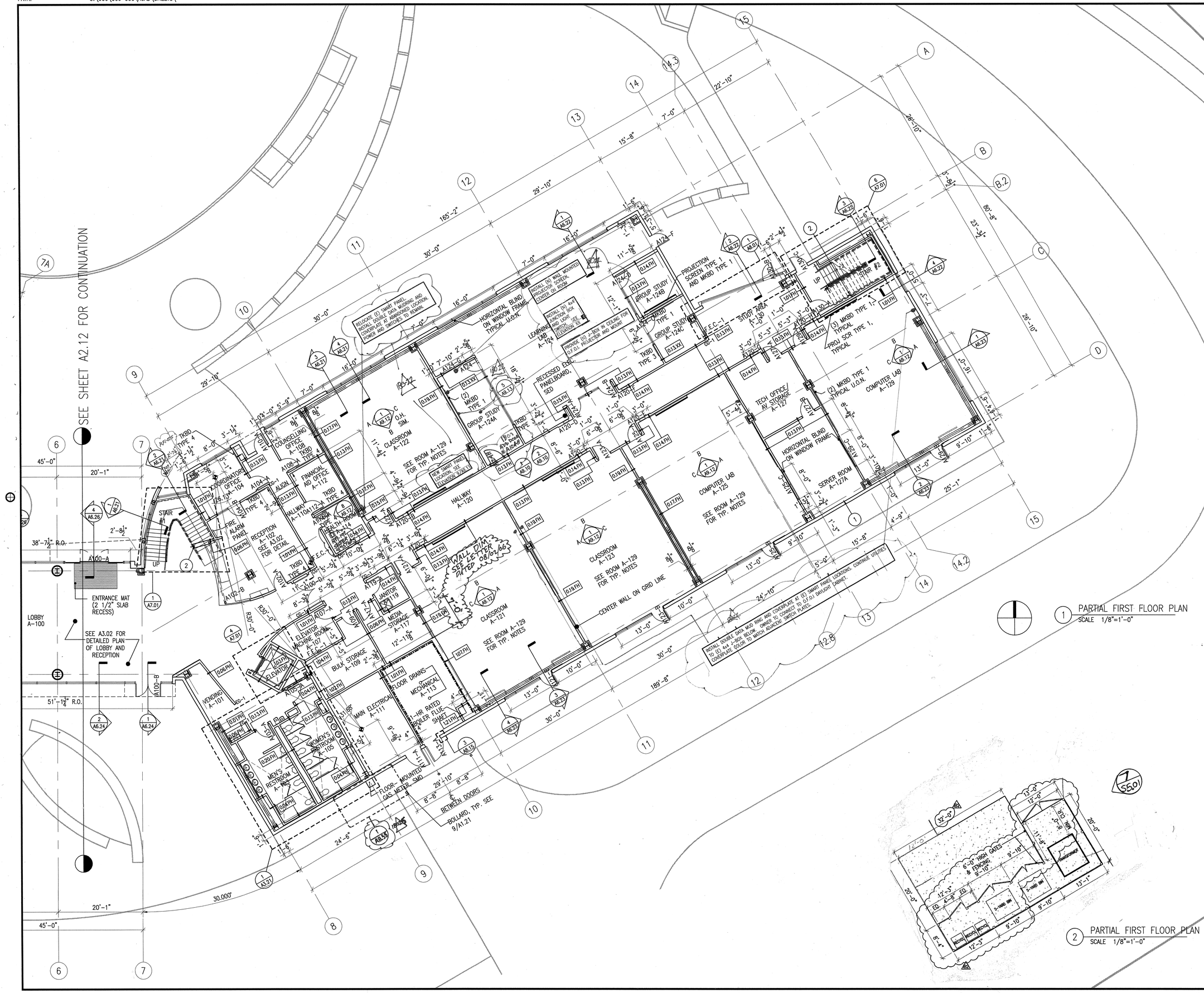

1 PARTIAL FIRST FLOOR PLAN
SCALE 1/8"=1'-0"

2 PARTIAL FIRST FLOOR PLAN
SCALE 1/8"=1'-0"

SHEET NOTES

SEE SHEET A10.01 FOR PARTITION SCHEDULE.

SEE SHEET A10.10 FOR OPENING SCHEDULE.

ALL EXTERIOR DIMENSIONS ON THIS SHEET INDICATE ROUGH OPENINGS AND OUTSIDE FACE OF FINISH FOR BUILDING CORNERS WITH RESPECT TO GRID LINES UNLESS OTHERWISE NOTED.

INSTALL HORIZONTAL BLINDS ON ALL EXTERIOR WINDOW FRAMES AND DOORS WITH GLAZING TYPICAL WITH THE EXCEPTION OF LOBBY, STUDY ZONES, & LECTURE HALL.

SEE 8/A10.04 FOR TYPICAL COLUMN FURRING DETAILS

KEY NOTES

1. INSTALL FIRE RETARDANT TREATED PLY WOOD BACKING FULL HEIGHT INTERIOR SIDE OF SERVER ROOM A-127A SOUTH WALL
2. FIRE HOSE CONNECTION & SPRINKLER RISER/VALVE ASSEMBLY

APPROVAL STAMP
IDENTIFICATION STAMP
DIVISION OF THE STATE ARCHITECT
APPL 02- 107417
FLS TH SS MC
DATE: 12/21/05

NO.	ISSUED FOR	DATE
1	DSA APPROVAL SET	12/08/05

LICENSED ARCHITECT
ROY S. LAUKA
NO. C7256
REN 7-31-07
STATE OF CALIFORNIA
CERTIFIED BY

K M D
KAPLAN McLAUGHLIN DIAZ
ARCHITECTURE PLANNING
222 VALLEJO SAN FRANCISCO, CA 94111
(415) 398-5191 FAX (415) 394-7158

SOLANO COMMUNITY COLLEGE

SCCD
VALLEJO CENTER
Contract # A003.6123.01.V1

PROJECT NO.	DATE
419-201	12-08-05

PARTIAL FIRST FLOOR PLAN
AS BUILTS

A2.11

PLOT DATE:

COPYRIGHT © 2004 BY KMD (KAPLAN McLAUGHLIN DIAZ). ALL RIGHTS RESERVED.

PATH: G:\000\000-000\ACAD\SHEETS\

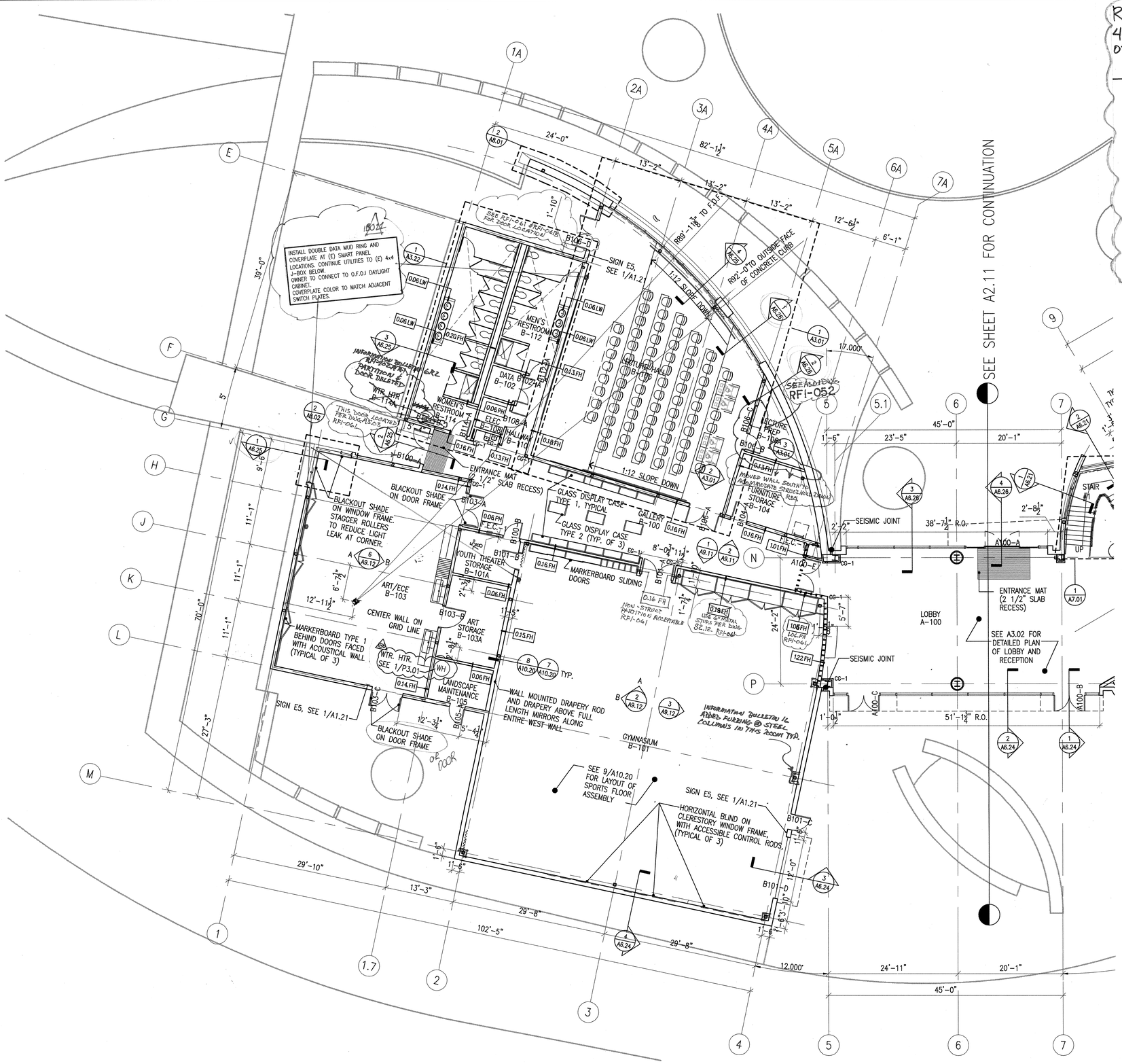

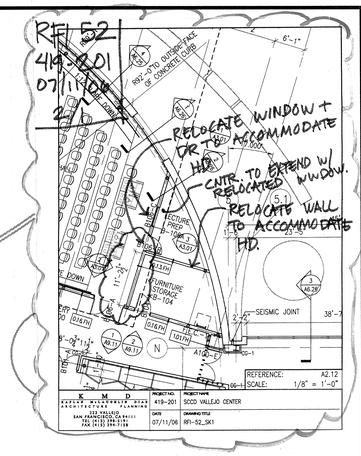

SHEET NOTES

SEE SHEET A10.01 FOR PARTITION SCHEDULE.

SEE SHEET A10.10 FOR OPENING SCHEDULE.

ALL EXTERIOR DIMENSIONS ON THIS SHEET INDICATE ROUGH OPENINGS AND OUTSIDE FACE OF FINISH FOR BUILDING CORNERS WITH RESPECT TO GRID LINES UNLESS OTHERWISE NOTED.

INSTALL HORIZONTAL BLINDS ON ALL EXTERIOR WINDOW FRAMES AND DOORS WITH GLAZING TYPICAL WITH THE EXCEPTION OF LOBBY, STUDY ZONES, & LECTURE HALL.

SEE 8/A10.04 FOR TYPICAL COLUMN FURRING DETAILS

KEY NOTES

APPROVAL STAMP
IDENTIFICATION STAMP
DIVISION OF THE STATE ARCHITECT
APPL. 02- 107417
AC FLS. RH SS WL
DATE: 12/21/05

NO.	ISSUED FOR	DATE
1	DSA APPROVAL SET	12/08/05

LICENSED ARCHITECT ROY S. LATTA NO. C7256 REN. 7-31-07 STATE OF CALIFORNIA
CERTIFIED BY

K M D
KAPLAN McLAUGHLIN DIAZ
ARCHITECTURE PLANNING
222 VALLEJO SAN FRANCISCO, CA 94111
(415) 398-5191 FAX (415) 394-7158

SOLANO COMMUNITY COLLEGE

SCCD
VALLEJO CENTER
Contract # A003.6123.01.V1

PROJECT NO.	DATE
419-201	12-08-05

PARTIAL FIRST FLOOR PLAN
AS BUILTS

A2.12

1 PARTIAL FIRST FLOOR PLAN
SCALE 1/8" = 1'-0"

PLOT DATE:

COPYRIGHT © 2004 BY KMD (KAPLAN McLAUGHLIN DIAZ). ALL RIGHTS RESERVED.

PATH: G:\000\000-000\ACAD\SHEETS\

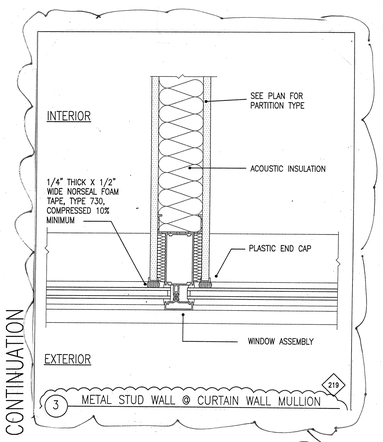

SEE SHEET A2.22 FOR CONTINUATION

INSTALL DOUBLE DATA MUD RING AND COVERPLATE AT (E) SMART PANEL LOCATIONS, CONTINUE UTILITIES TO (E) 4x4 J-BOX BELOW. COVERPLATE COLOR TO MATCH ADJACENT SWITCH PLATES.

SHEET NOTES

SEE SHEET A10.01 FOR PARTITION SCHEDULE.

SEE SHEET A10.10 FOR OPENING SCHEDULE.

ALL EXTERIOR DIMENSIONS ON THIS SHEET INDICATE ROUGH OPENINGS AND OUTSIDE FACE OF FINISH FOR BUILDING CORNERS WITH RESPECT TO GRID LINES UNLESS OTHERWISE NOTED.

INSTALL HORIZONTAL BLINDS ON ALL EXTERIOR WINDOW FRAMES AND DOORS WITH GLAZING TYPICAL WITH THE EXCEPTION OF LOBBY, STUDY ZONES, & LECTURE HALL.

SEE 8/A10.04 FOR TYPICAL COLUMN FURRING DETAILS.

KEY NOTES

1. FIRE HOSE CONNECTION
2. DIMENSION STRING IS FROM ROUGH OPENING OR GRID LINE TO EAST SIDE OF MULLION

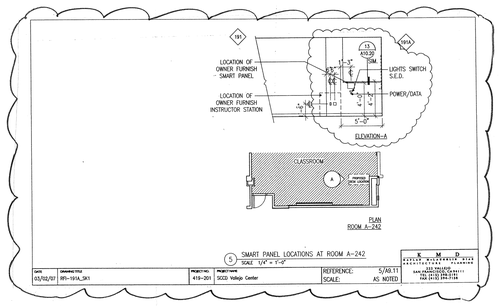

1 PARTIAL SECOND FLOOR PLAN
SCALE 1/8" = 1'-0"

RECEIVED
KITCHELL CEM
MAY 21 2007
SOLANO COMMUNITY COLLEGE FIELD OFFICE

APPROVAL STAMP
IDENTIFICATION STAMP
DIVISION OF THE STATE ARCHITECT
APPL 02- 107417
AC _____ FLS _____ SS _____
DATE: _____

NO.	ISSUED FOR	DATE
2	INFORMATION BULLETIN #23	05/18/07
1	DSA APPROVAL SET	12/08/05

LICENSED ARCHITECT ROY S. LAVKA NO. C7256 REN 7-31-07 STATE OF CALIFORNIA CERTIFIED ARCHITECT

K M D
KAPLAN McLAUGHLIN DIAZ
ARCHITECTURE PLANNING
222 VALLEJO SAN FRANCISCO, CA 94111
(415)398-5191 FAX (415)394-7158

SOLANO COMMUNITY COLLEGE

SCCD
VALLEJO CENTER
Contract # A003.6123.01.V1

PROJECT NO.	DATE
419-201	12-08-05

PARTIAL SECOND FLOOR PLAN

A2.21

PLOT DATE:

COPYRIGHT © 2004 BY KMD (KAPLAN McLAUGHLIN DIAZ). ALL RIGHTS RESERVED.

PATH: G:\000\000-000\ACAD\SHEETS\

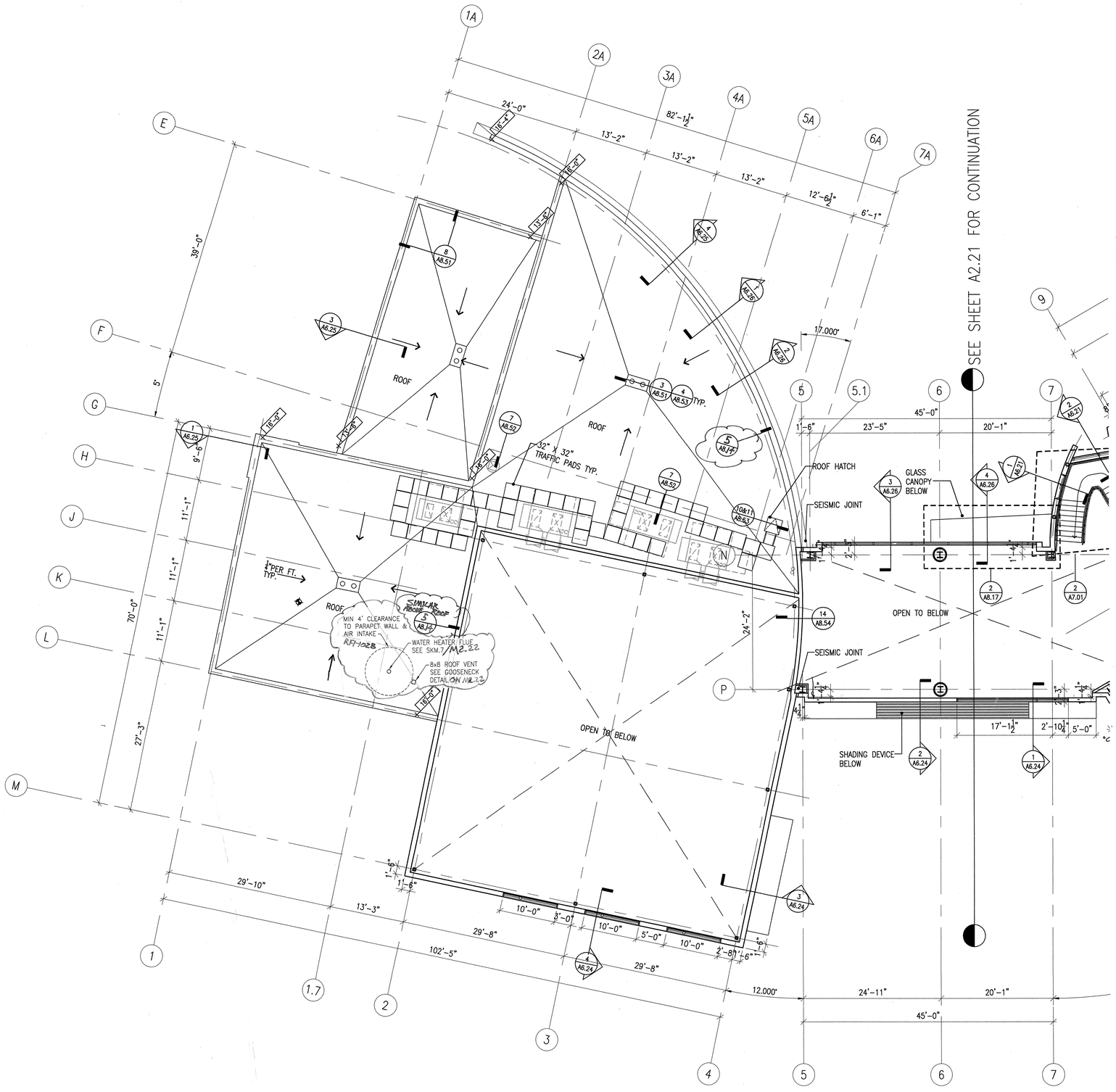

1 PARTIAL SECOND FLOOR PLAN
SCALE 1/8" = 1'-0"

APPROVAL STAMP
IDENTIFICATION STAMP
DIVISION OF THE STATE ARCHITECT
APPL. NO. 107417
AC FLS TH SS ML
DATE: 12/21/05

NO.	ISSUED FOR	DATE
1	DSA APPROVAL SET	12/08/05

LICENSED ARCHITECT
BOY S. LAU
NO. C7256
REN. 7-31-07
STATE OF CALIFORNIA
CERTIFIED

K M D
KAPLAN McLAUGHLIN DIAZ
ARCHITECTURE PLANNING
222 VALLEJO SAN FRANCISCO, CA 94111
(415) 398-5191 FAX (415) 394-7158

SOLANO COMMUNITY COLLEGE

SCCD
VALLEJO CENTER
Contract # A003.6123.01.V1

PROJECT NO. 419-201
DATE 12-08-05

PARTIAL SECOND FLOOR PLAN
AS BUILTS

A2.22

PLOT DATE:

COPYRIGHT © 2004 BY KMD (KAPLAN McLAUGHLIN DIAZ). ALL RIGHTS RESERVED.

PATH: G:\000\000-000\ACAD\SHEETS\

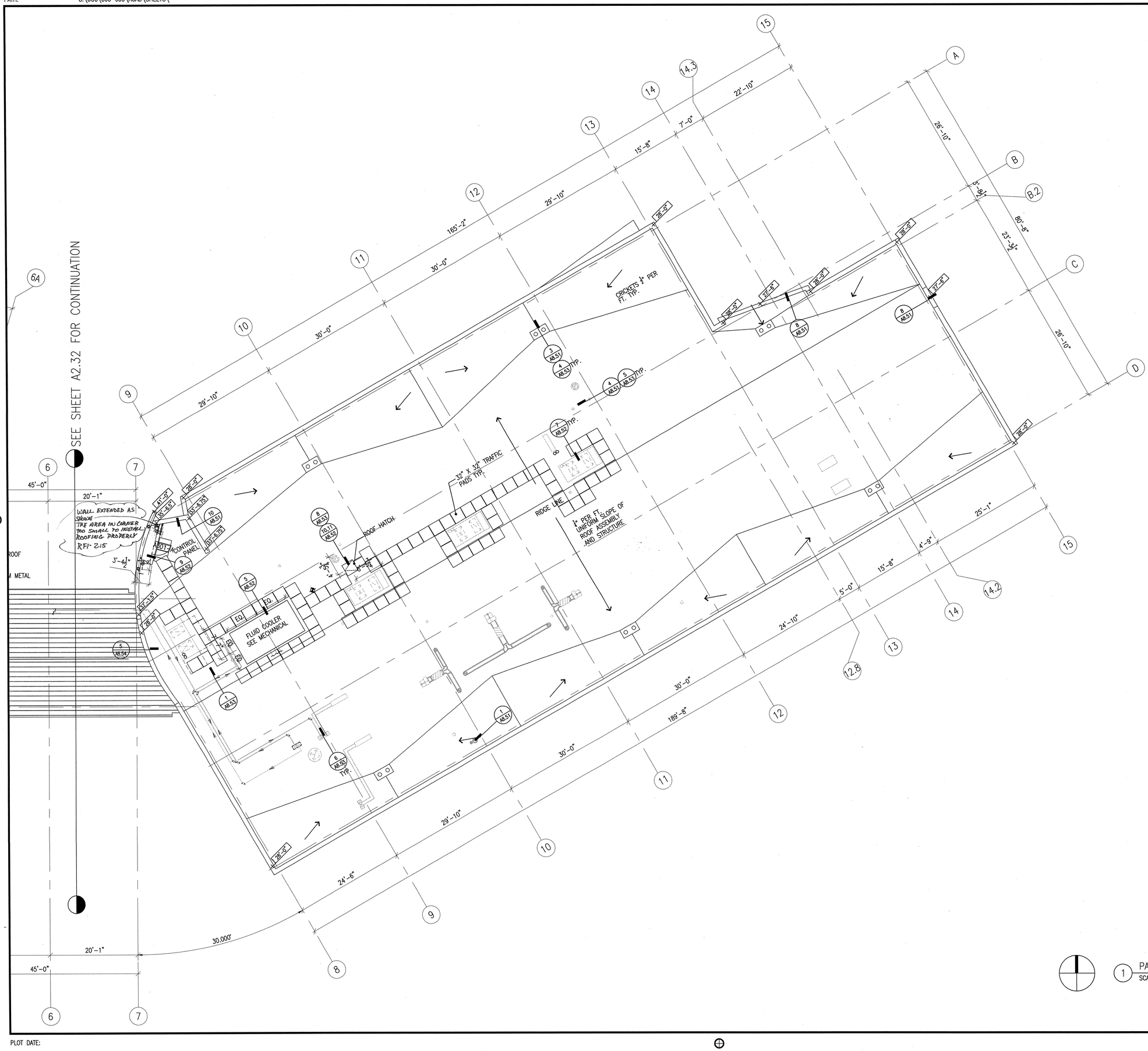

1 PARTIAL ROOF PLAN
SCALE 1/8" = 1'-0"

Ralph Larsen & Son, Inc.
General Contractor License No. 582541
583 8th Avenue
San Mateo, CA 94401-4201
Tel: (650) 579-5330
Fax: (650) 579-5343

Request for Information: 215
Detailed, RFIs Grouped by RFI Number

Vallejo Center for Solano Community College Dis
Project # 3934
Tel: (707) 644-8321
Fax: (707) 553-9724
Ralph Larsen & Son, Inc.
1480 Columbus Parkway
Vallejo, CA 94591

RFI #: 215
Date Created: 12/19/2005
Answer Company
Answered By
Author Company
Ralph Larsen & Son, Inc.
583 8th Avenue
San Mateo, CA 94401
Authored By
Jay Tucker
Co-Respondent
Author RFI Number
Subject
Conflict between wall location and window location
Discipline
Category
Cc: Company Name
Contact Name
Copies
Notes
Question
Date Required: 12/19/2005
Review attached sketches modified from Contract drawings A2.31 and 1/A8.03. The space between the NORTH end of window #1 and the adjacent parapet wall just to the NORTH will not provide the minimum 12"clearance required between vertical turn-up of roofing. The NORTH wall of the window access structure (1/A8.51) can not be constructed 6 inches from the center of the vertical roofing membrane at the NORTH end of window #1 and still provide the minimum 12" clearance standard requires 12 inch clearance. This standard spacing is shown in detail 12/A8.52. We would not be able to issue a roofing manufacturer's 10 year warranty unless the minimum 12 inches is achieved. The attached MODIFIED copies of sheets A2.31 and 1/A8.03 show the proposed solution. The NORTH wall of the access structure will have the 12 inches of clear space between vertical turn-up of roofing materials. We had constructed the parapet wall at the NORTH end of stair #1 before we realized that this conflict existed. This NORTH (of Stair #1) parapet must be removed and reconstructed 6 inches to the NORTH in order to allow the exterior parapet cap coping to become the counter flashing to the sloped metal roofing. To raise the NORTH parapet at Stair #1, we intend to sever metal studs beside the vertical studs a minimum of 24 inches and screw Simpson strong tie A35 clips to the studs with #10 screws at 8" O.C. acceptable to the Structural engineer?
1. Will this 24 inches of metal roof lap connection with #10 screws at 8" O.C. acceptable to the Structural engineer?
Suggestion
Answer
Date Answered
1. Contractor's proposed metal stud splice for raising the parapet 4" is structurally acceptable.
Chih-hung/DASSE
12/19/06

APPROVAL STAMP
IDENTIFICATION STAMP
DIVISION OF THE STATE ARCHITECT
APPL 02- 107417
AP FLS SS
DATE: 12/21/05

NO.	ISSUED FOR	DATE
1	DSA APPROVAL SET	12/08/05

LICENSED ARCHITECT
ROY S. LADING
No. C7256
REN. 7-31-06
STATE OF CALIFORNIA
CERTIFIED BY

K M D
KAPLAN McLAUGHLIN DIAZ
ARCHITECTURE PLANNING
222 VALLEJO SAN FRANCISCO, CA 94111
(415) 398-5191 FAX (415) 394-7158

SOLANO COMMUNITY COLLEGE

SCCD
VALLEJO CENTER
Contract # A003.6123.01.V1

PROJECT NO.	DATE
419-201	12-08-05

PARTIAL ROOF PLAN
AS BUILTS

A2.31

PLOT DATE:

COPYRIGHT © 2004 BY KMD (KAPLAN McLAUGHLIN DIAZ). ALL RIGHTS RESERVED.

PATH: G:\000\000-000\ACAD\SHEETS\

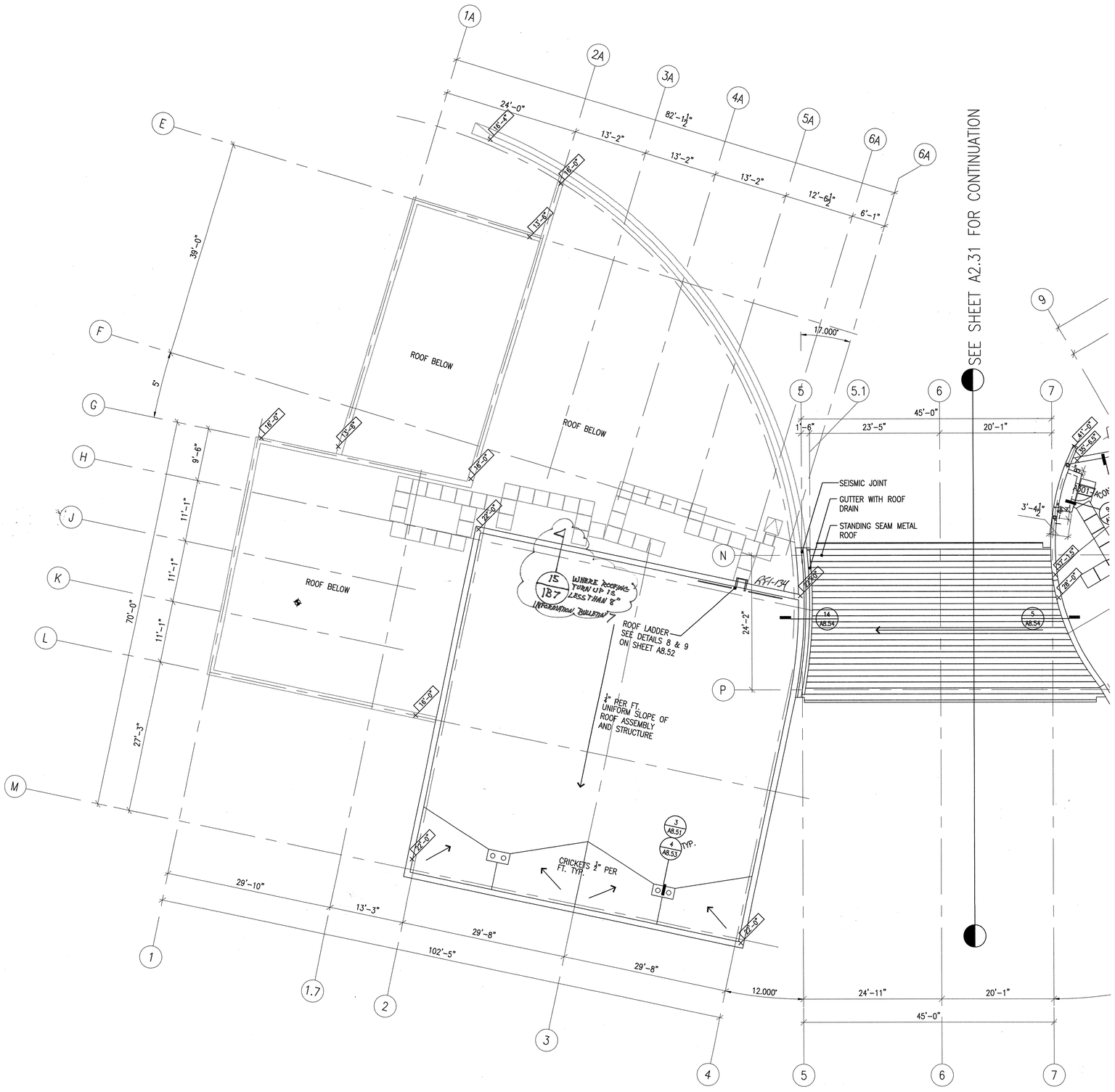

1 PARTIAL ROOF PLAN
SCALE 1/8" = 1'-0"

FROM IB #7

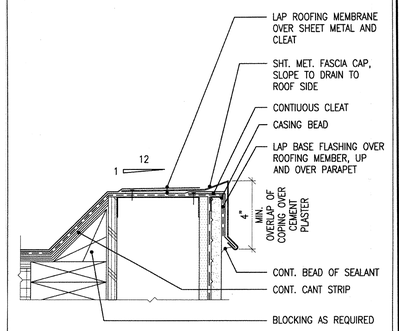

15/A8.15 SECTION – GRAVEL STOP AT CEMENT PLASTER
SCALE 3"=1'-0" CODE
FILE 09113-37-419 SPEC

INFORMATIONAL BULLETIN #7

REFERENCE: 15/A8.15
SCALE: AS NOTED

K M D
KAPLAN McLAUGHLIN DIAZ
ARCHITECTURE PLANNING
222 VALLEJO SAN FRANCISCO, CA 94111
TEL (415) 398-5191 FAX (415) 394-7158

PROJECT NO. 419-201
PROJECT NAME SCCD Vallejo Center
DATE 11/01/06
DRAWING TITLE IB7-SK2

APPROVAL STAMP
IDENTIFICATION STAMP
DIVISION OF THE STATE ARCHITECT
APPL. 02- 107417
AC. FLS SS
DATE: 12/21/05

NO.	ISSUED FOR	DATE
1	DSA APPROVAL SET	12/08/05

LICENSED ARCHITECT
ROY S. KAPLAN
No. C7256
EXP. 7-31-06
STATE OF CALIFORNIA
CERTIFIED BY

K M D
KAPLAN McLAUGHLIN DIAZ
ARCHITECTURE PLANNING
222 VALLEJO SAN FRANCISCO, CA 94111
(415) 398-5191 FAX (415) 394-7158

SOLANO COMMUNITY COLLEGE

SCCD
VALLEJO CENTER
Contract # A003.6123.01.V1

PROJECT NO. 419-201
DATE 12-08-05

PARTIAL ROOF PLAN
AS BUILTS

A2.32

PLOT DATE:

COPYRIGHT © 2004 BY KMD (KAPLAN McLAUGHLIN DIAZ). ALL RIGHTS RESERVED.

PATH: G:\000\000-000\ACAD\SHEETS\

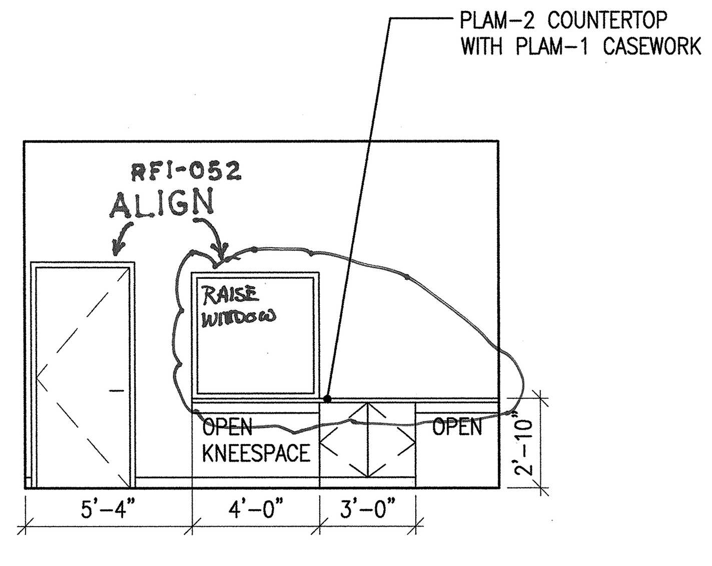

3 LECTURE PREP B-106A ELEVATION
SCALE 1/4" = 1'-0"

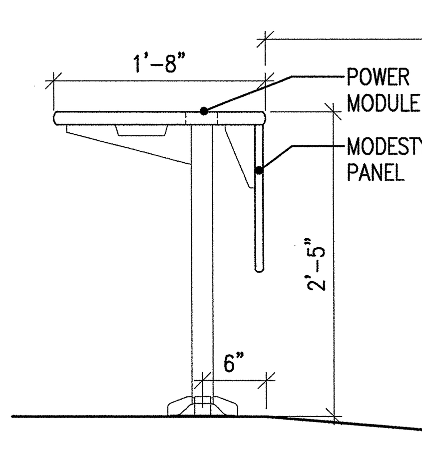

4 ACCESSIBLE TABLE DETAIL
SCALE 1" = 1'-0"

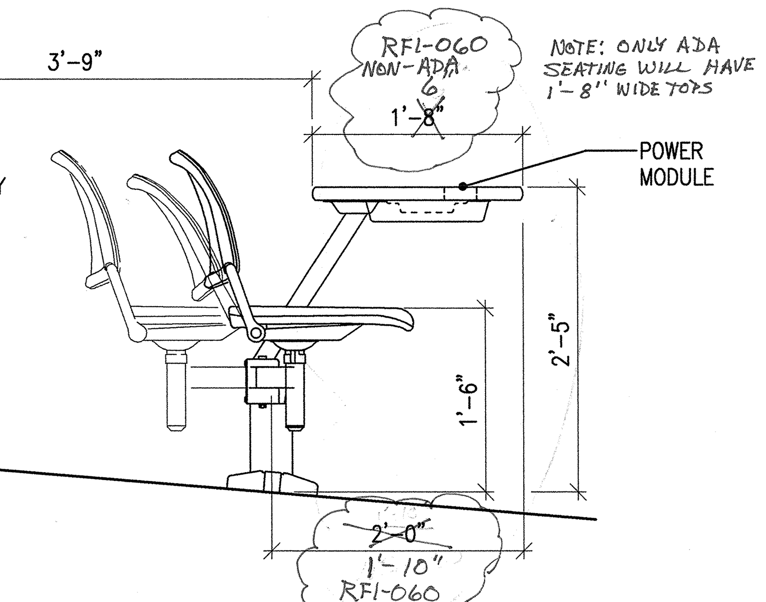

5 TYPICAL FIXED TABLE & SEAT DETAIL
SCALE 1" = 1'-0"

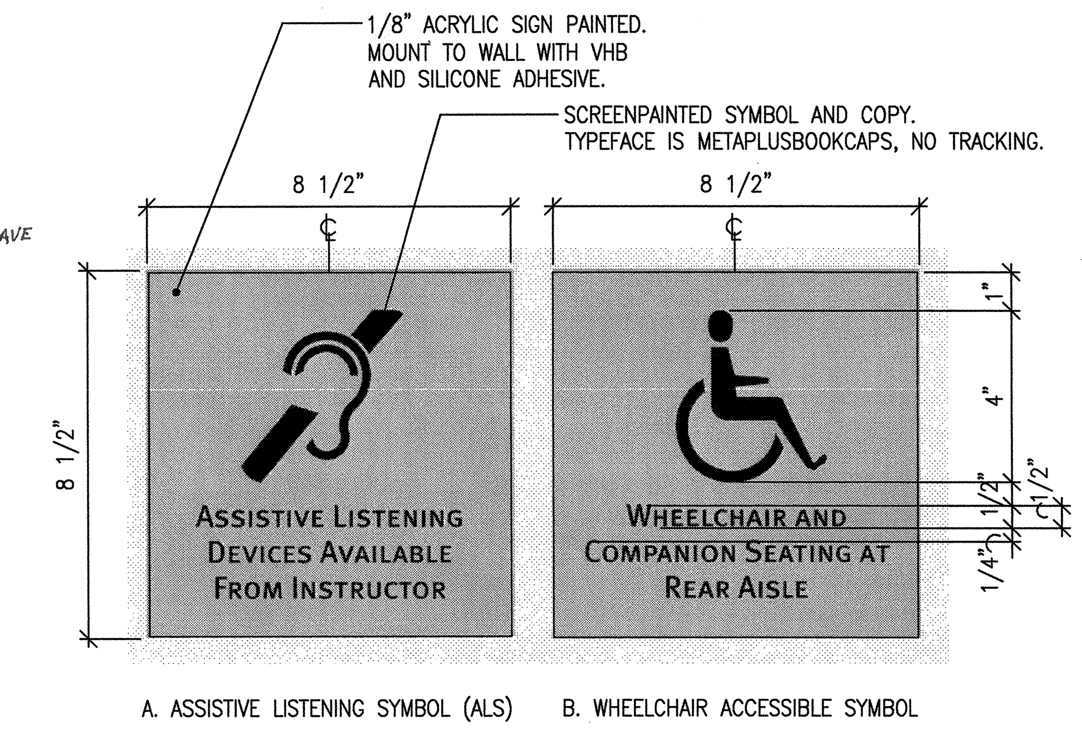

6 ACCESSIBLE SIGNAGE
SCALE NOT TO SCALE

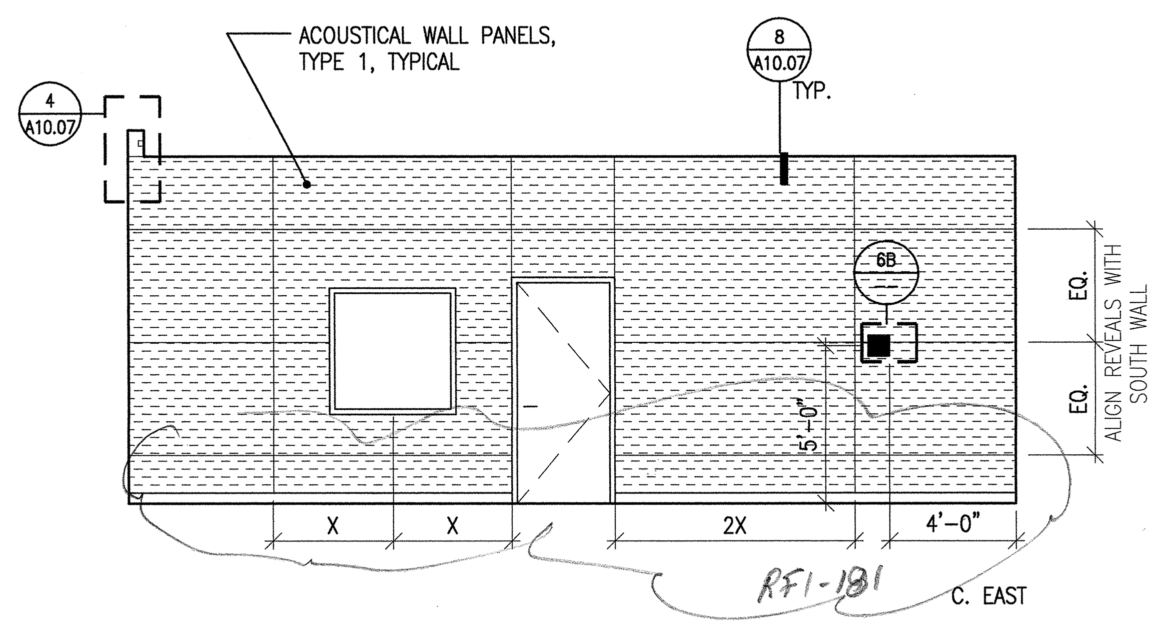

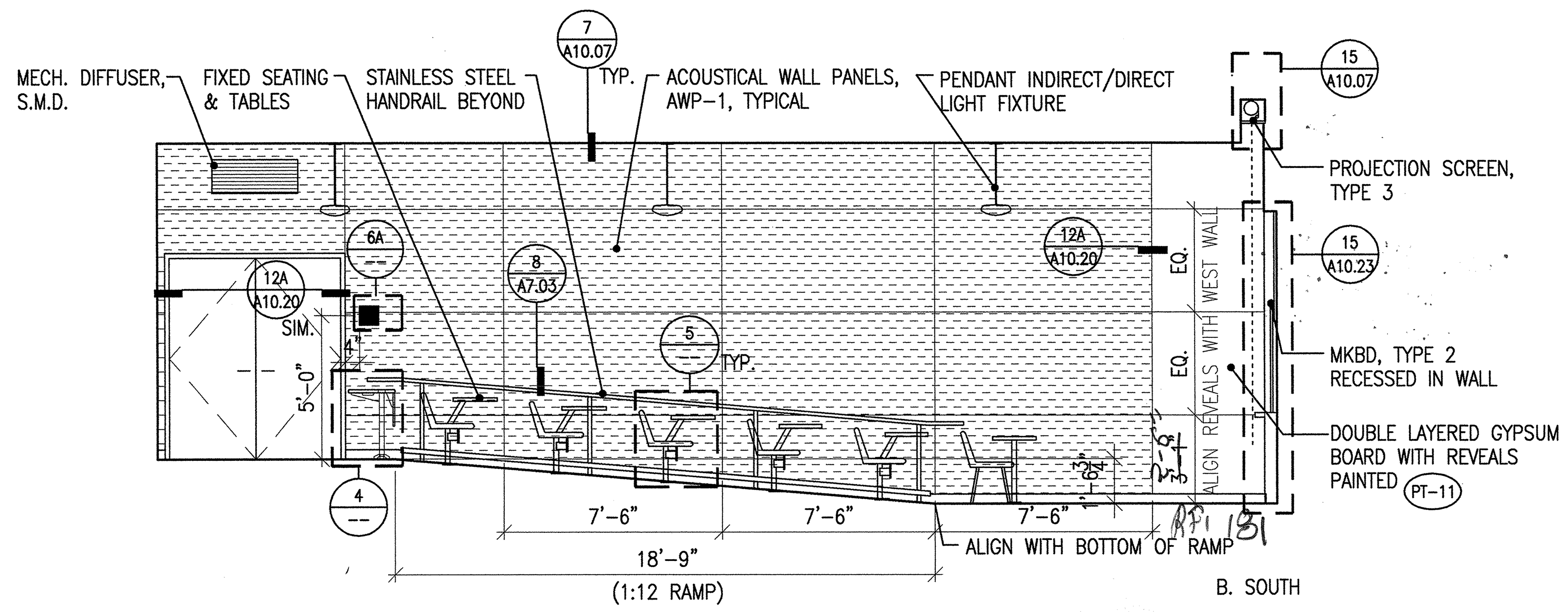

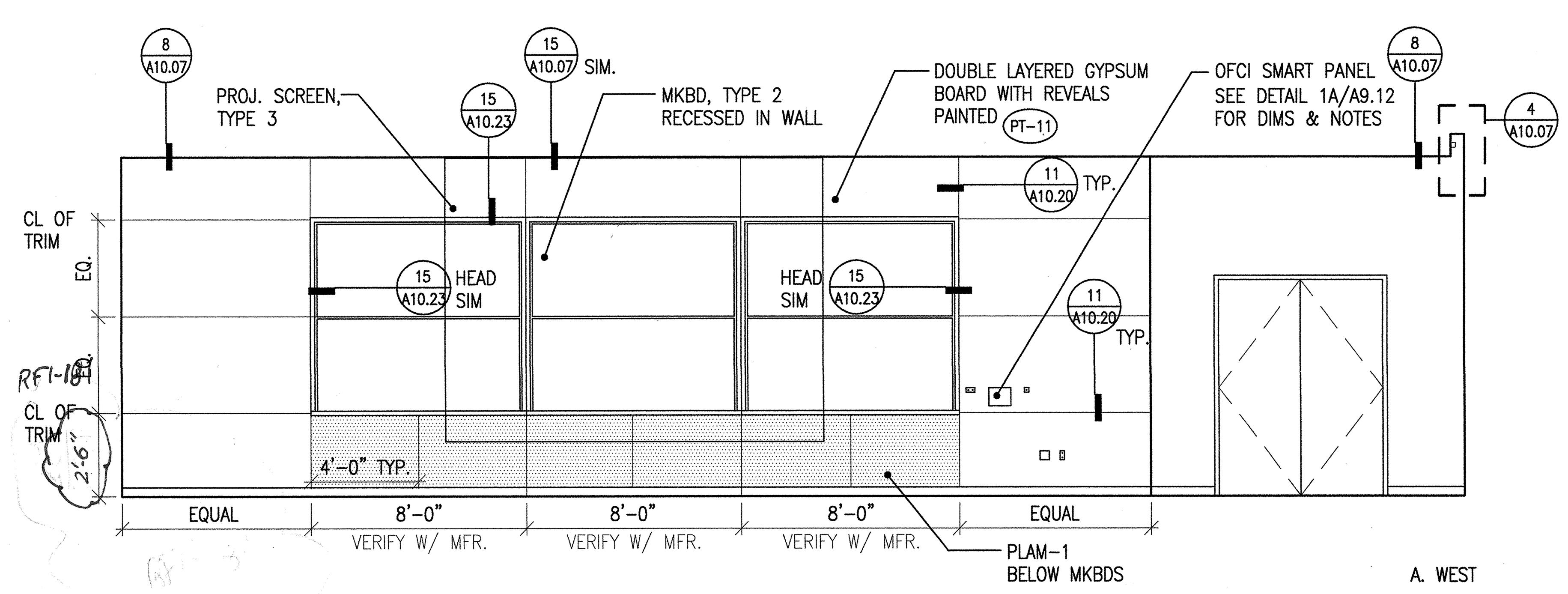

2 LECTURE HALL B-106 ELEVATIONS
SCALE 1/4" = 1'-0"

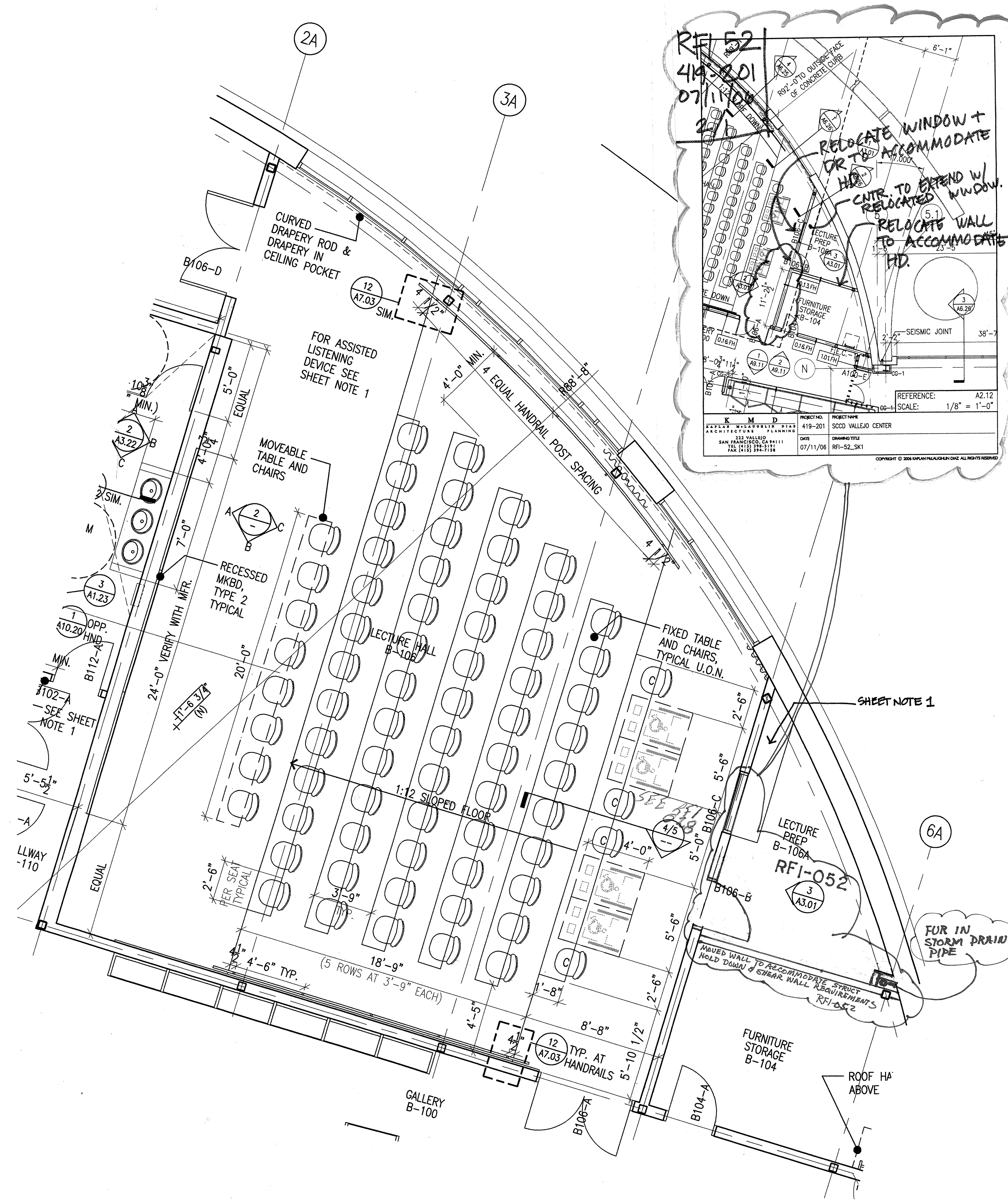

1 LECTURE HALL B-106 DETAILED PLAN
SCALE 1/4" = 1'-0"

SHEET NOTES

1. OWNER WILL PROVIDE PERMANENT ASSISTED LISTENING DEVICE FOR LECTURE HALL.

PER CBC 1104B.2.1: 4% OF SEATS TO HAVE ASSISTED LISTENING DEVICES. 4% OF 75 = 3 DEVICES.

PER CBC 1104B.3.4, TABLE 11B-1

SEATING CAPACITY	NO. OF WHEELCHAIR SEATING SPACES
4 to 26	1
27 to 50	2
51 to 300	4
301 to 500	6

PER CBC 1104B.3.4, 1% OF FIXED SEATS SHALL BE AISLE SEATS WITH NO ARMRESTS ON THE AISLE SIDE. NOTE ALL SEATS ARE WITHOUT ARMRESTS.

PER CBC 1104B.3.8: 2% OF SEATS TO ACCOMODATE SEMI-AMBULANT INDIVIDUALS WITH 24" CLEAR LEG SPACE BETWEEN FRONT OF SEAT TO NEAREST OBSTRUCTION OR BACK OF THE SEAT IMMEDIATELY IN FRONT OF THEM. NOTE MOST SEATS MEET THIS CRITERIA.

APPROVAL STAMP
IDENTIFICATION STAMP
DIVISION OF THE STATE ARCHITECT
APPL 02- 107417
AC [signature] FLS TH SS [signature]
DATE: 12/21/05

NO.	ISSUED FOR	DATE
1	DSA APPROVAL SET	12/08/05

LICENSED ARCHITECT ROY S. LATKA NO. C7256 REN. 7-31-07 STATE OF CALIFORNIA
CERTIFIED BY

K M D
KAPLAN McLAUGHLIN DIAZ
ARCHITECTURE PLANNING
222 VALLEJO SAN FRANCISCO, CA 94111
(415) 398-5191 FAX (415) 394-7158

SOLANO COMMUNITY COLLEGE

SCCD
VALLEJO CENTER
Contract # A003.6123.01.V1

PROJECT NO. 419-201
DATE 12-08-05

DETAILED FLOOR PLAN AND ELEVATIONS - LECTURE HALL
AS BUILTS

A3.01

PLOT DATE:

COPYRIGHT © 2004 BY KMD (KAPLAN McLAUGHLIN DIAZ). ALL RIGHTS RESERVED.

PATH: G:\000\000-000\ACAD\SHEETS\

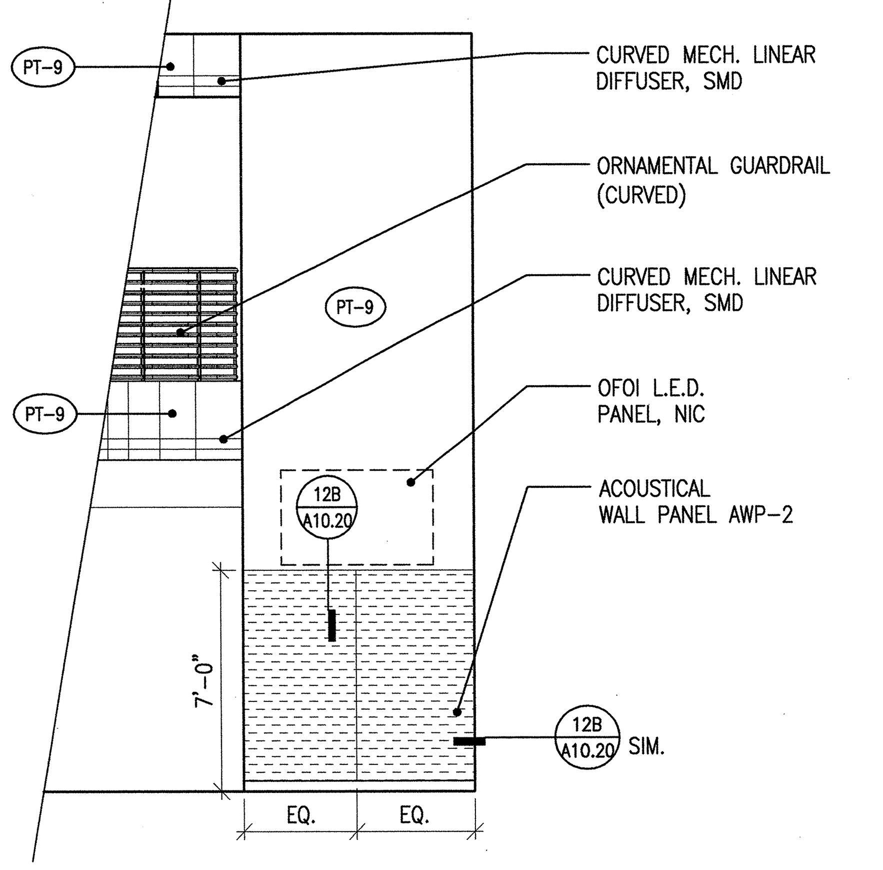

3 INTERIOR ELEVATION OF LOBBY A-100 SOUTH WALL
SCALE 1/4" = 1'-0"

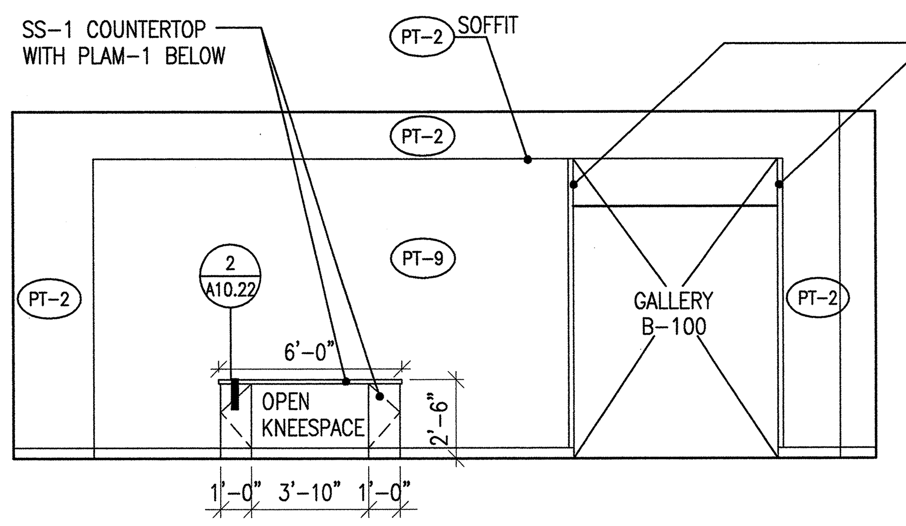

4 INTERIOR ELEVATION OF LOBBY WEST WALL
SCALE 1/4" = 1'-0"

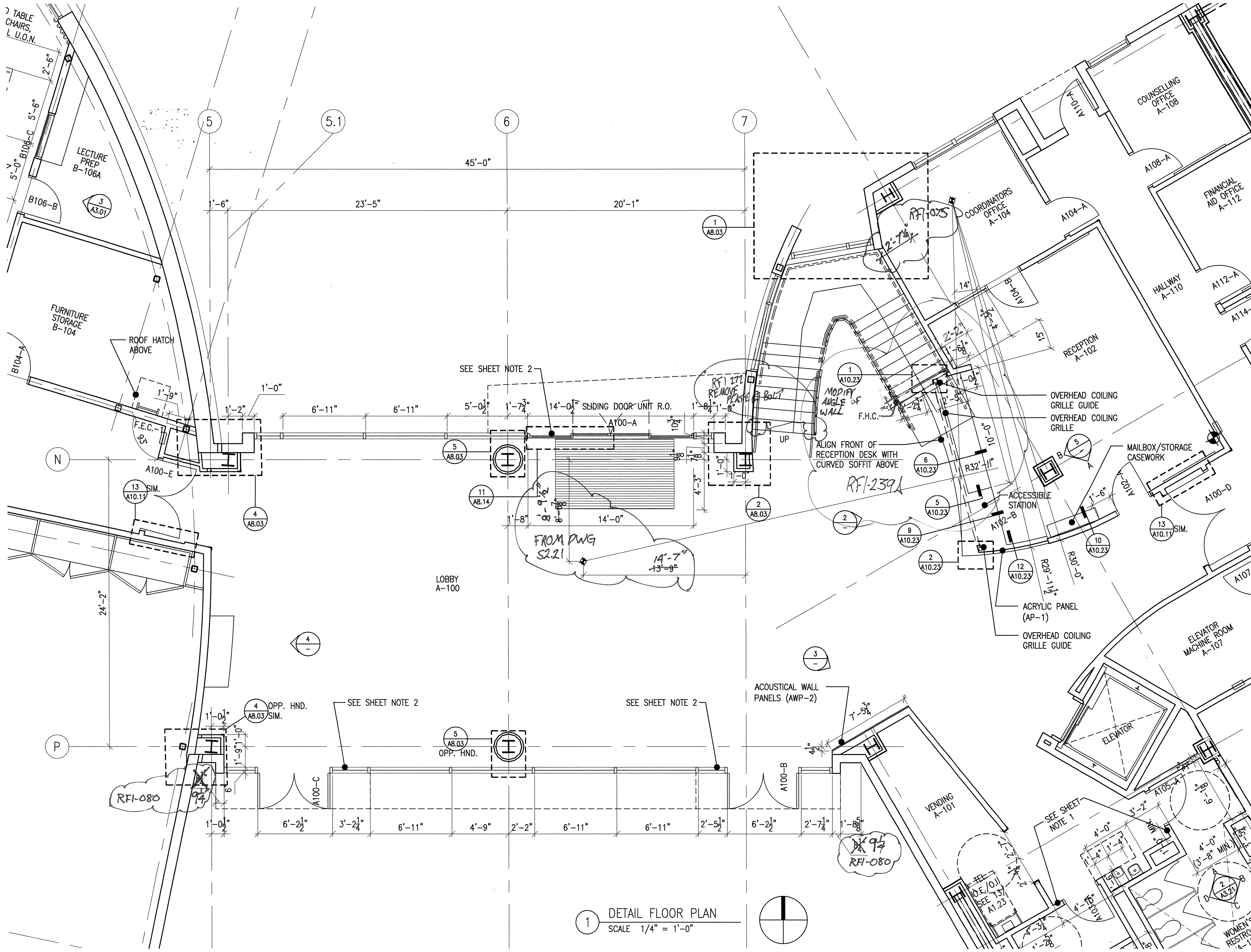

1 DETAIL FLOOR PLAN
SCALE 1/4" = 1'-0"

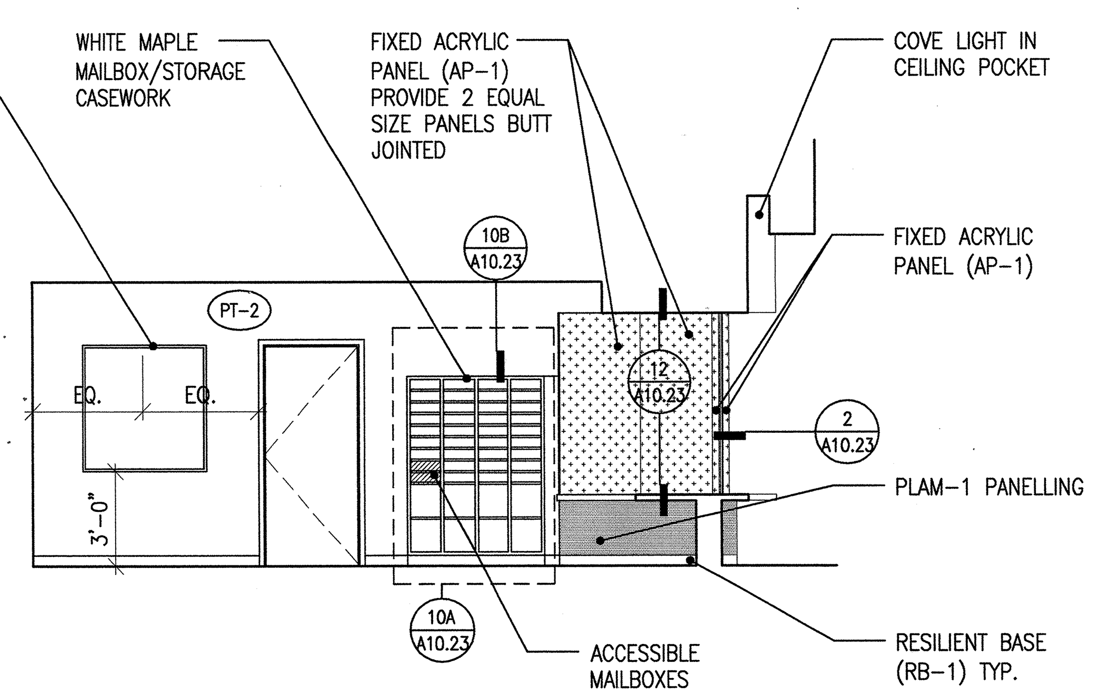

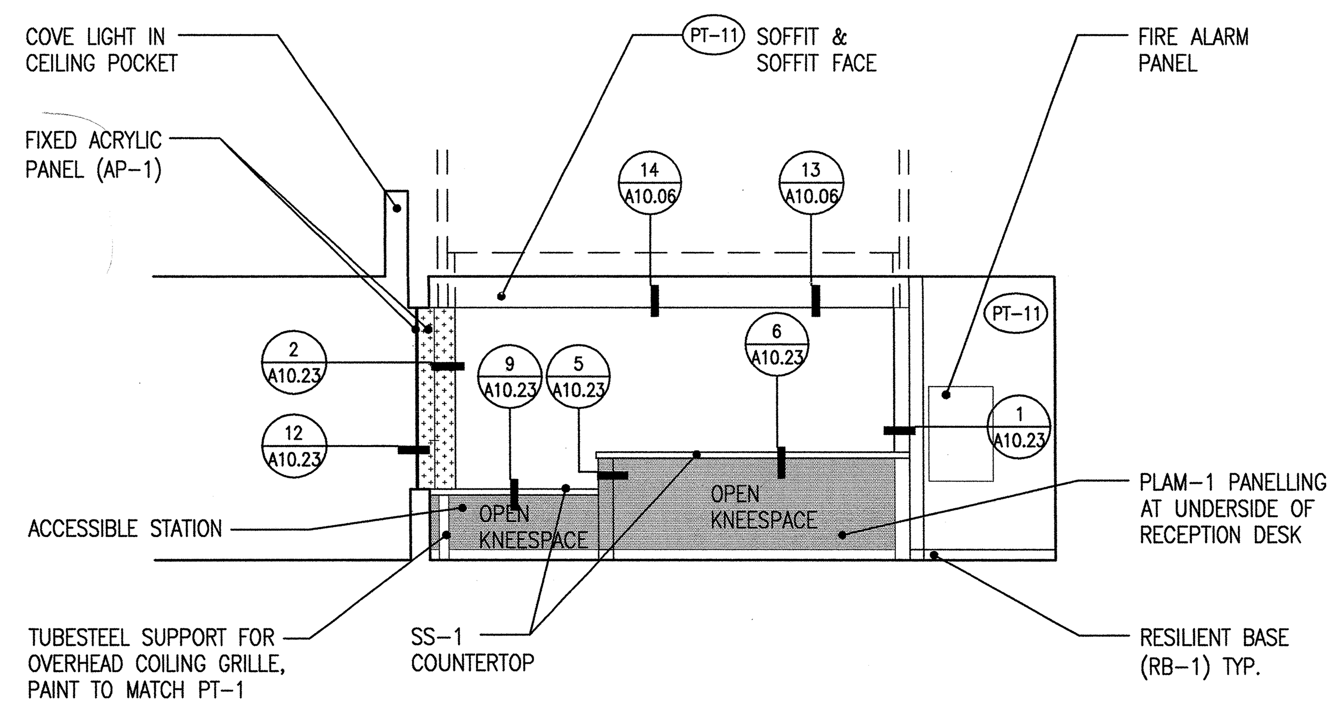

5 INTERIOR ELEVATION OF RECEPTION A-102
SCALE 1/4" = 1'-0"

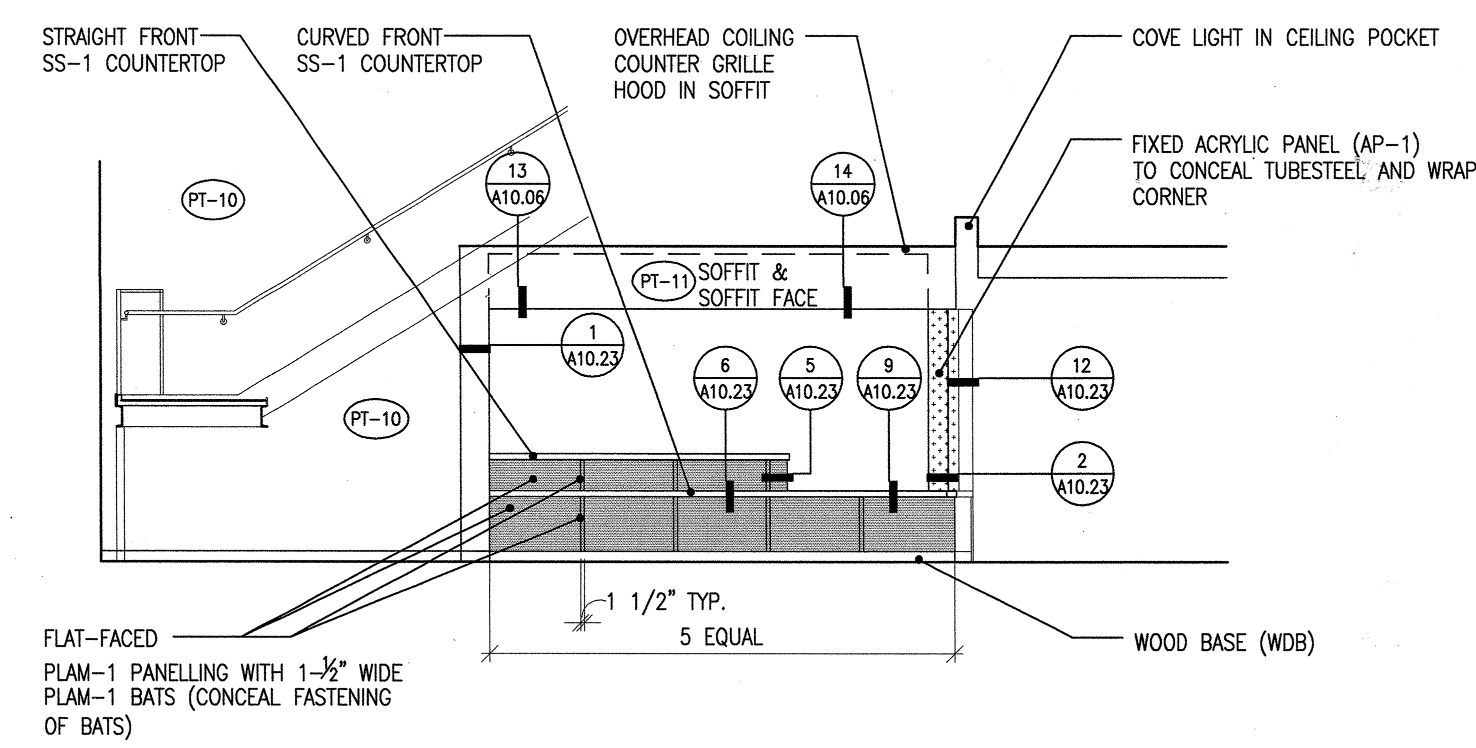

2 INTERIOR ELEVATION OF RECEPTION FROM LOBBY
SCALE 1/4" = 1'-0"

SHEET NOTES

1. SEE 4/A1.21 FOR ROOM SIGN AND DOOR SIGN AT RESTROOMS.
2. SEE ELEVATIONS AND 3/A1.21 FOR ACCESSIBLE ENTRY SIGNAGE.

Ralph Larsen & Son, Inc.
General Contractors License No. 189341
300 8th Avenue
San Mateo, CA 94401-4221
Phone (650) 579-0339
Fax (650) 579-0349

Request for Information 239A

Detailed, RFIs Grouped by RFI Number

Vallejo Center for Solano Community College Dis
Northgate Business Park
545 Columbus Parkway
Vallejo, CA 94591

Project # 2604
Tel: (707) 649-8327 Fax: (707) 553-9728

Ralph Larsen & Son, Inc.

Date Created: 2/4/2007

RFI #: 239A
Answer Company
Answered By
Author Company: Ralph Larsen & Son, Inc. 300 8th Avenue San Mateo, CA 94401
Authored By: Jay Tucker
Co-Respondent
Author RFI Number
Subject: Conflicts between structural stairs versus soffit height and radius.
Discipline
Category
Cc: Company Name Contact Name Copies Notes
Date Required:

Question
Coordination of the radius center points has not resolved all the conflicts at the reception counter, walls and soffit framing. I have set some photographs (by email) to Matt Youdall that shows the conflicts. Please discuss this RFI-239A with Mr. Youdall. Review the attached sketches showing CHANGES to the Contract Drawings needed to resolve the conflicts. The structural support beam and bracket (shown in detail 15a/S7.05) protrudes beyond the finish soffit. Look at detail 7/A7.03 the detail shows installing one 7/8" furring channel on the bent plate and then applying one layer of gypsum board. We could extend the vertical soffit framing (beyond the bent plate) by about 4 inches (versus the 1½" shown) if we allow the vertical stud framing to be installed outside of the bent plate. This change in framing would reduce the finish radius dimension and allow the vertical gypsum board to conceal the steel beam and bracket that supports the (tube steel) stair stringer.
The wall framing at the North end of the reception desk is shown a an angle that is not parallel with the stair risers. If the North wall at the reception desk is constructed where shown the stair risers at the South side of the wall are lower than the 10'- 6" soffit height required by detail 7/A7.03. The bottom of the lowest stair tread is about 9'- 5" near the West end of this (north end of reception counter) wall. If we change the angle for the North wall (at the reception counter) we could align this wall with the stair tread and achieve a bottom of stair tread of about 10'- 0" AFF on the South side of this wall. By aligning the (North) wall at the reception counter with the stair treads we could achieve a bottom of finish soffit elevation of about 9'- 10½" versus the 10'- 6" shown in 7/A7.03). Mr. Youdall want the North end of (vertical face of) the soffit to be straight and located under the (tube steel) stair stringer until the soffit ends at the North wall of the Reception counter.
The approved submittal (copy attached) shows the grill operator located on the NORTH end of the Coiling Grill. The automatic operator and motor are too tall to be installed on the NORTH end of the Grill. The stair treads are too low where the Coiling Grill motor must be located at the North end. If we move the automatic operator to the South end of the Coiling Grill the conflict with the low stair treads is resolved.
1. Do you want us to proceed with the changes described above?

Suggestion

Answer
1. Yes

Melanie Kung / KMD
02/15/07

APPROVAL STAMP
IDENTIFICATION STAMP
DIVISION OF THE STATE ARCHITECT
APPL 02- 107417
AC [signature] FLS TH SS RL
DATE: 12/21/05

NO.	ISSUED FOR	DATE
1	DSA APPROVAL SET	12/08/05

LICENSED ARCHITECT ROY S. LATKA NO. C7256 REN. 7-31-07 STATE OF CALIFORNIA
CERTIFIED BY

K M D
KAPLAN McLAUGHLIN DIAZ
ARCHITECTURE PLANNING
222 VALLEJO SAN FRANCISCO, CA 94111
(415) 398-5191 FAX (415) 394-7158

SOLANO COMMUNITY COLLEGE

SCCD
VALLEJO CENTER
Contract # A003.6123.01.V1

PROJECT NO. 419-201
DATE 12-08-05

DETAILED FLOOR PLAN AND ELEVATIONS - LOBBY
AS BUILTS

A3.02

PLOT DATE:

COPYRIGHT © 2004 BY KMD (KAPLAN McLAUGHLIN DIAZ). ALL RIGHTS RESERVED.

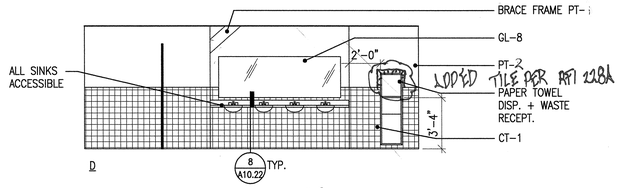

SEE SHEET A1.23 FOR TYPICAL MOUNTING HEIGHTS OF FIXTURES, TOILET ACCESSORIES AND GRAB BAR DETAILS.

4 INTERIOR ELEVATIONS A-103
SCALE 1/4" = 1'-0"

RFI-228 CLARIFIED THE PAINT TO BE PT-2 IN THE TOILET RMS.

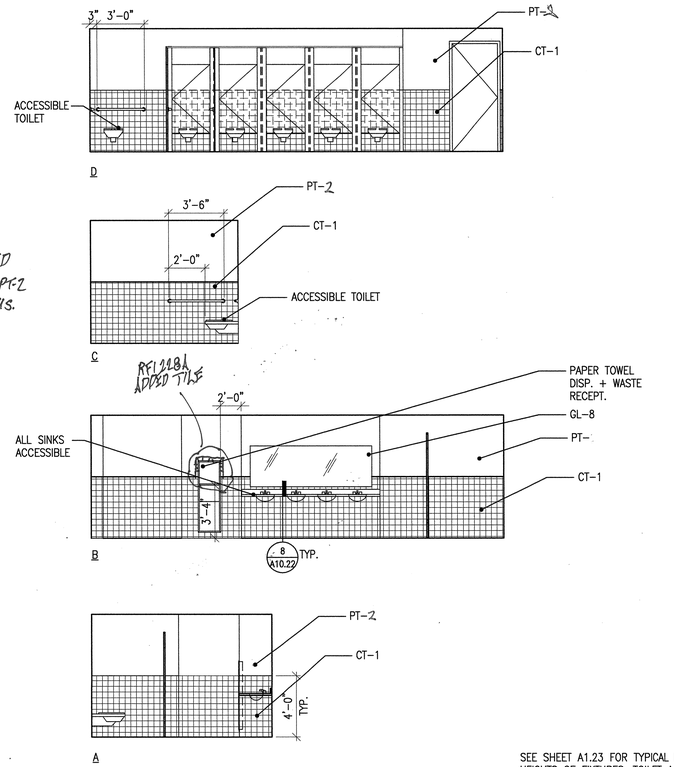

SEE SHEET A1.23 FOR TYPICAL MOUNTING HEIGHTS OF FIXTURES, TOILET ACCESSORIES AND GRAB BAR DETAILS.

2 INTERIOR ELEVATIONS A-105
SCALE 1/4" = 1'-0"

SHEET NOTES

1. SEE 4/A1.21 FOR ROOM SIGN AND DOOR SIGN AT RESTROOMS.

SEE SHEET A1.23 FOR TYPICAL MOUNTING HEIGHTS OF FIXTURES, TOILET ACCESSORIES AND GRAB BAR DETAILS.

5 INTERIOR ELEVATIONS A-228
SCALE 1/4" = 1'-0"

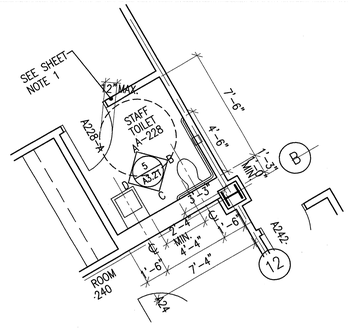

SEE SHEET A1.23 FOR TYPICAL MOUNTING HEIGHTS OF FIXTURES, TOILET ACCESSORIES AND GRAB BAR DETAILS.

3 DETAILED FLOOR PLAN
SCALE 1/4" = 1'-0"

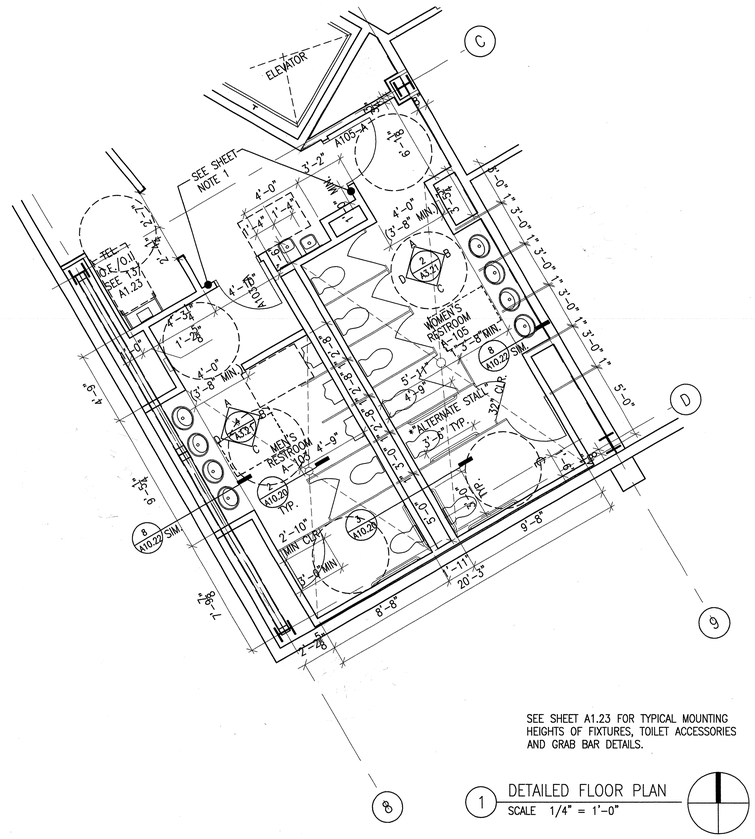

SEE SHEET A1.23 FOR TYPICAL MOUNTING HEIGHTS OF FIXTURES, TOILET ACCESSORIES AND GRAB BAR DETAILS.

1 DETAILED FLOOR PLAN
SCALE 1/4" = 1'-0"

APPROVAL STAMP
IDENTIFICATION STAMP
DIVISION OF THE STATE ARCHITECT
APPL 02- 107417
AC FLS SS
DATE: 12/21/05

NO.	ISSUED FOR	DATE
1	DSA APPROVAL SET	12/08/05

LICENSED ARCHITECT ROY STANLEY NO. C7256 REN. 7-31-07 STATE OF CALIFORNIA
CERTIFIED BY

K M D
KAPLAN McLAUGHLIN DIAZ
ARCHITECTURE PLANNING
222 VALLEJO SAN FRANCISCO, CA 94111
(415) 398-5191 FAX (415) 394-7158

SOLANO COMMUNITY COLLEGE

SCCD
VALLEJO CENTER
Contract # A003.6123.01.V1

PROJECT NO.	DATE
419-201	12-08-05

DETAILED PLANS AND ELEVATIONS RESTROOMS
AS BUILTS

A3.21

COPYRIGHT © 2004 BY KMD (KAPLAN McLAUGHLIN DIAZ). ALL RIGHTS RESERVED.

PATH: G:\000\000-000\ACAD\SHEETS\

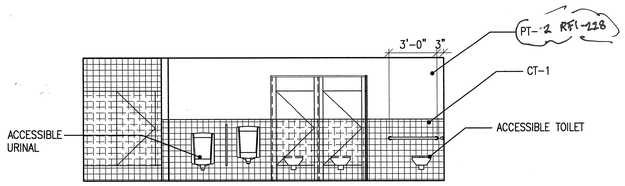

D

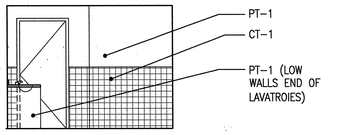

C

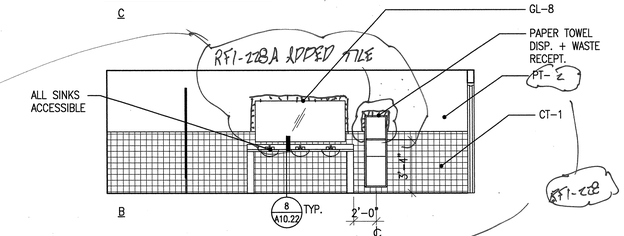

B

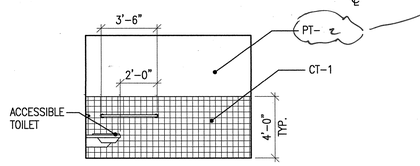

A

SEE SHEET A1.23 FOR TYPICAL MOUNTING HEIGHTS OF FIXTURES, TOILET ACCESSORIES AND GRAB BAR DETAILS.

2 INTERIOR ELEVATIONS B-112
SCALE 1/4" = 1'-0"

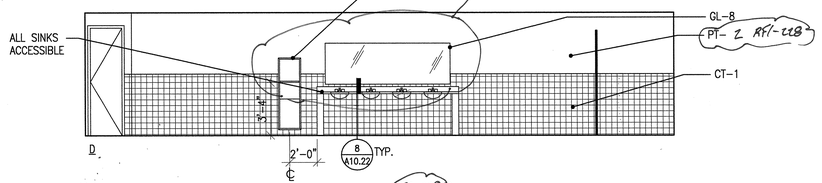

D

SEE RFI-227 FOR TILE WALL LAYOUT

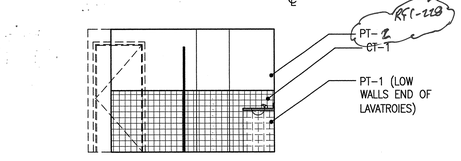

C

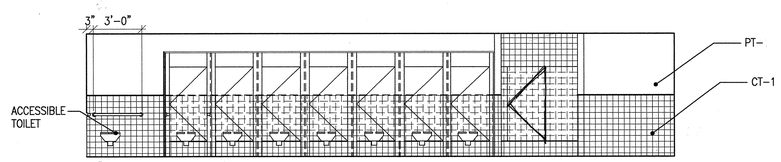

B

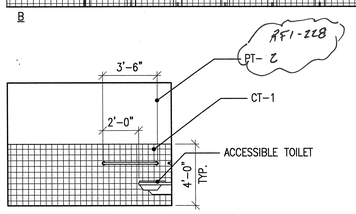

A

SEE SHEET A1.23 FOR TYPICAL MOUNTING HEIGHTS OF FIXTURES, TOILET ACCESSORIES AND GRAB BAR DETAILS.

3 INTERIOR ELEVATIONS B-114
SCALE 1/4" = 1'-0"

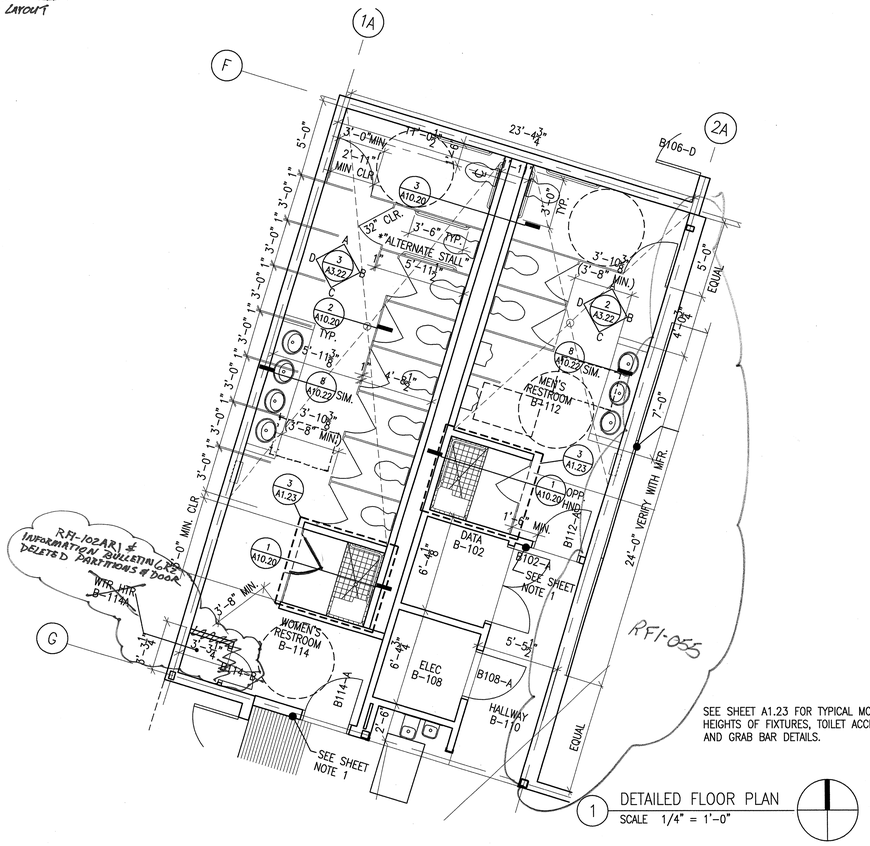

SEE SHEET A1.23 FOR TYPICAL MOUNTING HEIGHTS OF FIXTURES, TOILET ACCESSORIES AND GRAB BAR DETAILS.

1 DETAILED FLOOR PLAN
SCALE 1/4" = 1'-0"

SHEET NOTES

1. SEE 4/A1.21 FOR ROOM SIGN AND DOOR SIGN AT RESTROOMS.

APPROVAL STAMP
IDENTIFICATION STAMP
DIVISION OF THE STATE ARCHITECT
APPL 02- 107417
AC MD FLS TH SS MC
DATE: 12/21/05

NO.	ISSUED FOR	DATE
1	DSA APPROVAL SET	12/08/05

LICENSED ARCHITECT ROY S. LAVIA NO. C7256 EXPIRES 7-31-07 STATE OF CALIFORNIA
CERTIFIED

K M D
KAPLAN McLAUGHLIN DIAZ
ARCHITECTURE PLANNING
222 VALLEJO SAN FRANCISCO, CA 94111
(415) 398-5191 FAX (415) 394-7158

SOLANO COMMUNITY COLLEGE

SCCD
VALLEJO CENTER
Contract # A003.6123.01.V1

PROJECT NO. 419-201
DATE 12-08-05

DETAILED PLANS AND ELEVATIONS RESTROOMS
AS BUILTS

A3.22

PLOT DATE:

COPYRIGHT © 2004 BY KMD (KAPLAN McLAUGHLIN DIAZ). ALL RIGHTS RESERVED.

PATH: G:\000\000-000\ACAD\SHEETS\

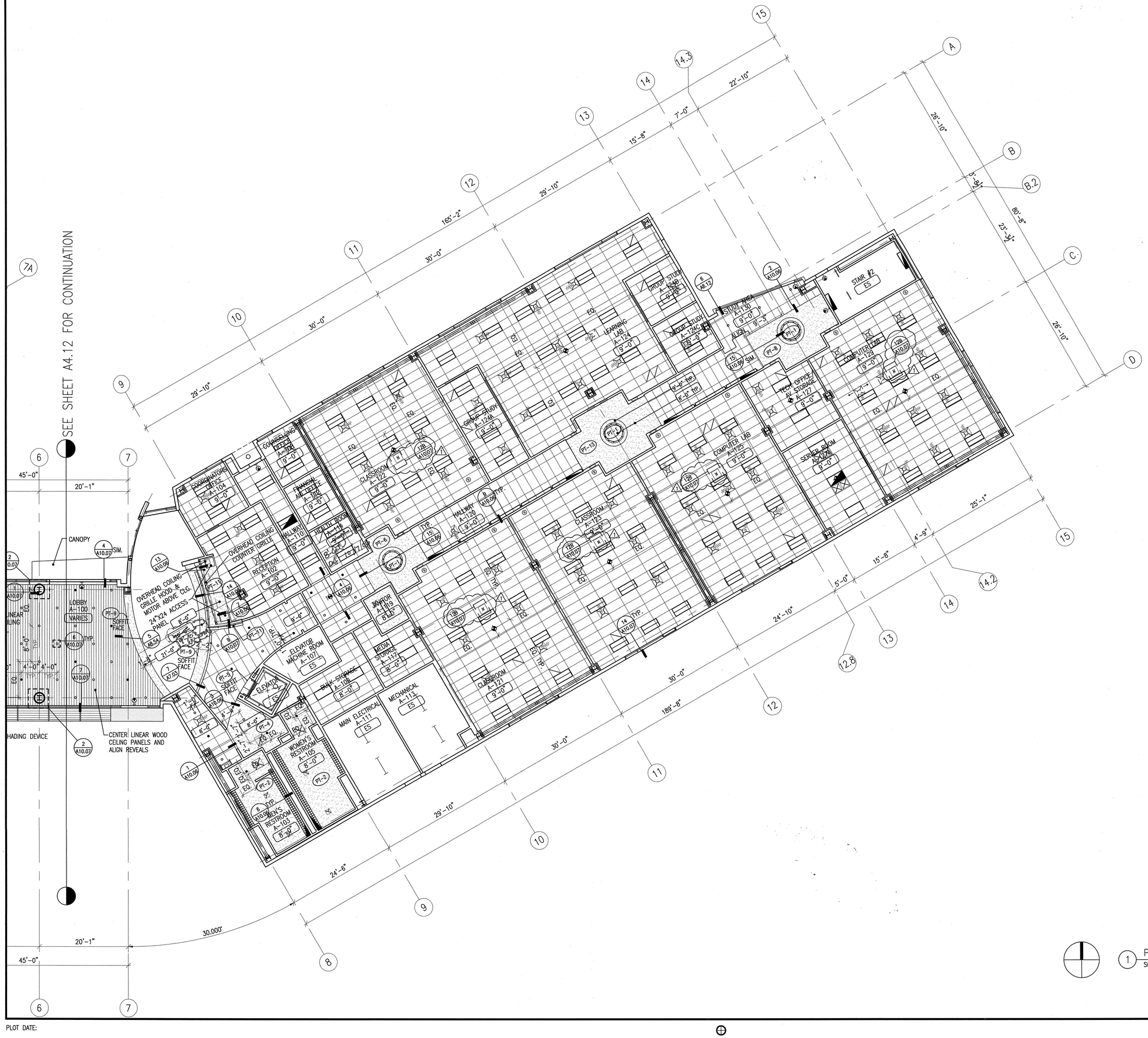

1 PARTIAL FIRST FLOOR RCP
SCALE 1/8" = 1'-0"

REFLECTED CEILING PLAN LEGEND

- ACOUSTIC CEILING TILES SEE A10.XX FOR SUSPENDED GRID REQUIREMENTS
- GYPSUM BOARD CEILING SEE A10.31 FOR SUSPENDED FRAMING REQ.
- GYPSUM BOARD CEILING SEE A10.31 FOR SUSPENDED FRAMING REQ.
- SEE ELECTRICAL LIGHTING DRAWINGS WITH LIGHT FIXTURE TYPES
- MECH DIFFUSER/RETURN GRILLE, SEE MECH. DRAWINGS
- E.S EXPOSED STRUCTURE
- 9'-0" CEILING HEIGHT A.F.F.
- CEILING MOUNTED SPEAKERS
- EXIT SIGN S.E.D.
- CEILING MOUNTED EQUIPMENT, SEE EQUIP. SCH.
- EXTERIOR WALL SCONCE
- CEILING RECESSED PROJECTOR LIFT

GENERAL NOTES

A SEE MECHANICAL AND ELECTRICAL FOR ADDITIONAL DEVICES AND FIXTURES NOT INDICATED.

B CENTER CEILING GRID IN ROOMS U.O.N. CENTER LIGHT FIXTURES IN G.W.B. CEILINGS U.O.N.

C NO CUT CEILING TILES LESS THAN 6" ALLOWED.

D CENTER SMOKE DETECTORS, THERMAL DETECTORS, SPRINKLER HEADS, MECH. DIFFUSERS, LIGHT FIXTURES IN CEILING TILES.

E ALL CEILING SUSPENSION SYSTEMS SHALL HAVE SEISMIC RESTRAINTS PER LOCAL BUILDING CODES AND ORDINANCES.

F PROVIDE 2'-0"X2'-0" ACCESS PANELS IN G.W.B CEILINGS, AS REQUIRED FOR MECH. & ELEC. CO-ORDINATE WITH MECH & ELEC.

G IN DOUBLE HEIGHT SPACES, CEILING HEIGHT GIVEN IS FROM FINISH FLOOR OF PLAN ON WHICH IT IS DRAWN.

H SEE ROOM FINISH SCHEDULE FOR ADDITIONAL INFO.

APPROVAL STAMP
IDENTIFICATION STAMP
DIVISION OF THE STATE ARCHITECT
APPL 02- 107417
AC ____ FLS ____ SS ____
DATE: ____

NO.	ISSUED FOR	DATE
1	DSA APPROVAL SET	12/08/05
2	ADDENDUM #1	02/03/06

LICENSED ARCHITECT ROY S. LAING NO. C7256 REN 7-31-07 STATE OF CALIFORNIA CERTIFIED

K M D
KAPLAN McLAUGHLIN DIAZ
ARCHITECTURE PLANNING
222 VALLEJO SAN FRANCISCO, CA 94111
(415) 398-5191 FAX (415) 394-7158

SOLANO COMMUNITY COLLEGE

SCCD
VALLEJO CENTER
Contract # A003.6123.01.V1

PROJECT NO. 419-201
DATE 12-08-05

PARTIAL REFLECTED CEILING PLAN
AS BUILTS

A4.11

PLOT DATE:

COPYRIGHT © 2004 BY KMD (KAPLAN McLAUGHLIN DIAZ). ALL RIGHTS RESERVED.

PATH: G:\000\000-000\ACAD\SHEETS\

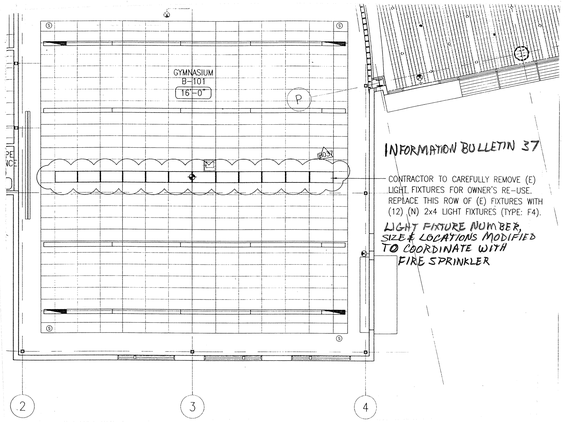

INFORMATION BULLETIN 37

CONTRACTOR TO CAREFULLY REMOVE (E) LIGHT FIXTURES FOR OWNER'S RE-USE. REPLACE THIS ROW OF (E) FIXTURES WITH (12) (N) 2x4 LIGHT FIXTURES (TYPE F4).

LIGHT FIXTURE NUMBER, SIZE & LOCATIONS MODIFIED TO COORDINATE WITH FIRE SPRINKLER

1 PARTIAL FIRST FLOOR RCP
SCALE 1/8" = 1'-0"

Copy sent by e-mail to East Bay Drywall & Long Elect. on 8-28-06

Ralph Larsen & Son, Inc.
General Contractor License No. 185241
300 8th Avenue
Santa Rosa, CA 95401-4221
Phone: (800) 579-6228
Fax (800) 579-6349

Request for Information 089

Detailed, RFIs Grouped by RFI Number

Vallejo Center for Solano Community College Dist.
Northgate Business Park
545 Columbus Parkway
Vallejo, CA 94591

Project # 3004
Tel: (707) 649-8327 Fax: (707) 553-9728

Ralph Larsen & Son, Inc.

RFI #: 089
Answer Company

Answered By

Author Company
Ralph Larsen & Son, Inc.
300 8th Avenue
San Mateo, CA 94401

Author RFI Number

Date Created: 8/23/2006
Authored By
Jay Tucker

Co-Respondent

Subject
Detail for support wires at metal decking with no concrete fill.

Discipline

Category

Cc Company Name Contact Name Copies Notes

Question
Drawings do not found any detail for ceiling support wires at the (non concrete filled) metal decking at the roof level over Room B101 GYM. The attached detail is the most common detail we have seen used for DSA projects to support ceiling support and seismic wires at (no concrete fill) metal decking.
1. Is the attached detail acceptable for use at suspended ceilings, light fixtures, and seismic wires for acoustical ceilings?
Drawing A4.12 requires us to use detail 10/A10.06 for the perimeter soffit framing in Room B101. Detail 10/A10.05 implies that the 2x12 blocking at the perimeter is not required for framing to the roof structure. Detail 10/A10.05 implies that the metal decking over room B101 will have concrete fill, however this concrete fill in the metal decking over Room B101 is not shown on the structural drawings or the roof section details for this area of the Building.
2. Are any revisions required for the attachment of metal stud framing to the underside of the metal decking at Room B101, because it does not receive concrete fill?

Suggestion

Date Required: 9/4/2006

Answer
Date Answered:

1. SEE ATTACHED SKETCH FOR DESIGN TEAM RECOMMENDATION.
2. NO. SEE 10/A10.05.

PD/KMD
419-201
08/24/06
2/1

Printed on: 8/23/2006 RAL/Pri

Printing Manager

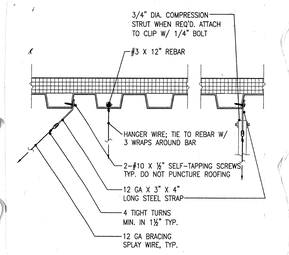

CEILING SUPPORT AT STEEL DECK
SCALE 3"=1'-0" CODE
FILE 095000-09-GS SPEC

REFLECTED CEILING PLAN LEGEND

- ACOUSTIC CEILING TILES SEE A10.XX FOR SUSPENDED GRID REQUIREMENTS
- GYPSUM BOARD CEILING SEE A10.31 FOR SUSPENDED FRAMING REQ.
- GYPSUM BOARD CEILING SEE A10.31 FOR SUSPENDED FRAMING REQ.
- SEE ELECTRICAL LIGHTING DRAWINGS WITH LIGHT FIXTURE TYPES
- MECH DIFFUSER/RETURN GRILLE, SEE MECH. DRAWINGS
- E.S EXPOSED STRUCTURE
- 9'-0" CEILING HEIGHT A.F.F.
- CEILING MOUNTED SPEAKERS
- EXIT SIGN S.E.D.
- CEILING MOUNTED EQUIPMENT, SEE EQUIP. SCH.
- EXTERIOR WALL SCONCE
- CEILING RECESSED PROJECTOR LIFT

GENERAL NOTES

A SEE MECHANICAL AND ELECTRICAL FOR ADDITIONAL DEVICES AND FIXTURES NOT INDICATED.

B CENTER CEILING GRID IN ROOMS U.O.N. CENTER LIGHT FIXTURES IN G.W.B. CEILINGS U.O.N.

C NO CUT CEILING TILES LESS THAN 6" ALLOWED.

D CENTER SMOKE DETECTORS, THERMAL DETECTORS, SPRINKLER HEADS, MECH. DIFFUSERS, LIGHT FIXTURES IN CEILING TILES.

E ALL CEILING SUSPENSION SYSTEMS SHALL HAVE SEISMIC RESTRAINTS PER LOCAL BUILDING CODES AND ORDINANCES.

F PROVIDE 2'-0"X2'-0" ACCESS PANELS IN G.W.B CEILINGS, AS REQUIRED FOR MECH. & ELEC. CO-ORDINATE WITH MECH & ELEC.

G IN DOUBLE HEIGHT SPACES, CEILING HEIGHT GIVEN IS FROM FINISH FLOOR OF PLAN ON WHICH IT IS DRAWN.

H SEE ROOM FINISH SCHEDULE FOR ADDITIONAL INFO.

APPROVAL STAMP

IDENTIFICATION STAMP
DIVISION OF THE STATE ARCHITECT
APP# 02- 107417
AC FLS SS
DATE: 12/21/05

NO.	ISSUED FOR	DATE
1	DSA APPROVAL SET	12/08/05

LICENSED ARCHITECT ROY S. LATTA NO. C7256 REN. 7-31-07 STATE OF CALIFORNIA
CERTIFIED BY

K M D
KAPLAN McLAUGHLIN DIAZ
ARCHITECTURE PLANNING
222 VALLEJO SAN FRANCISCO, CA 94111
(415) 398-5191 FAX (415) 394-7158

SOLANO COMMUNITY COLLEGE

SCCD
VALLEJO CENTER
Contract # A003.6123.01.V1

PROJECT NO.	DATE
419-201	12-08-05

PARTIAL FIRST FLOOR REFLECTED CEILING PLAN
AS BUILTS

A4.12

PLOT DATE:

COPYRIGHT © 2004 BY KMD (KAPLAN McLAUGHLIN DIAZ). ALL RIGHTS RESERVED.

PATH: G:\000\000-000\ACAD\SHEETS\

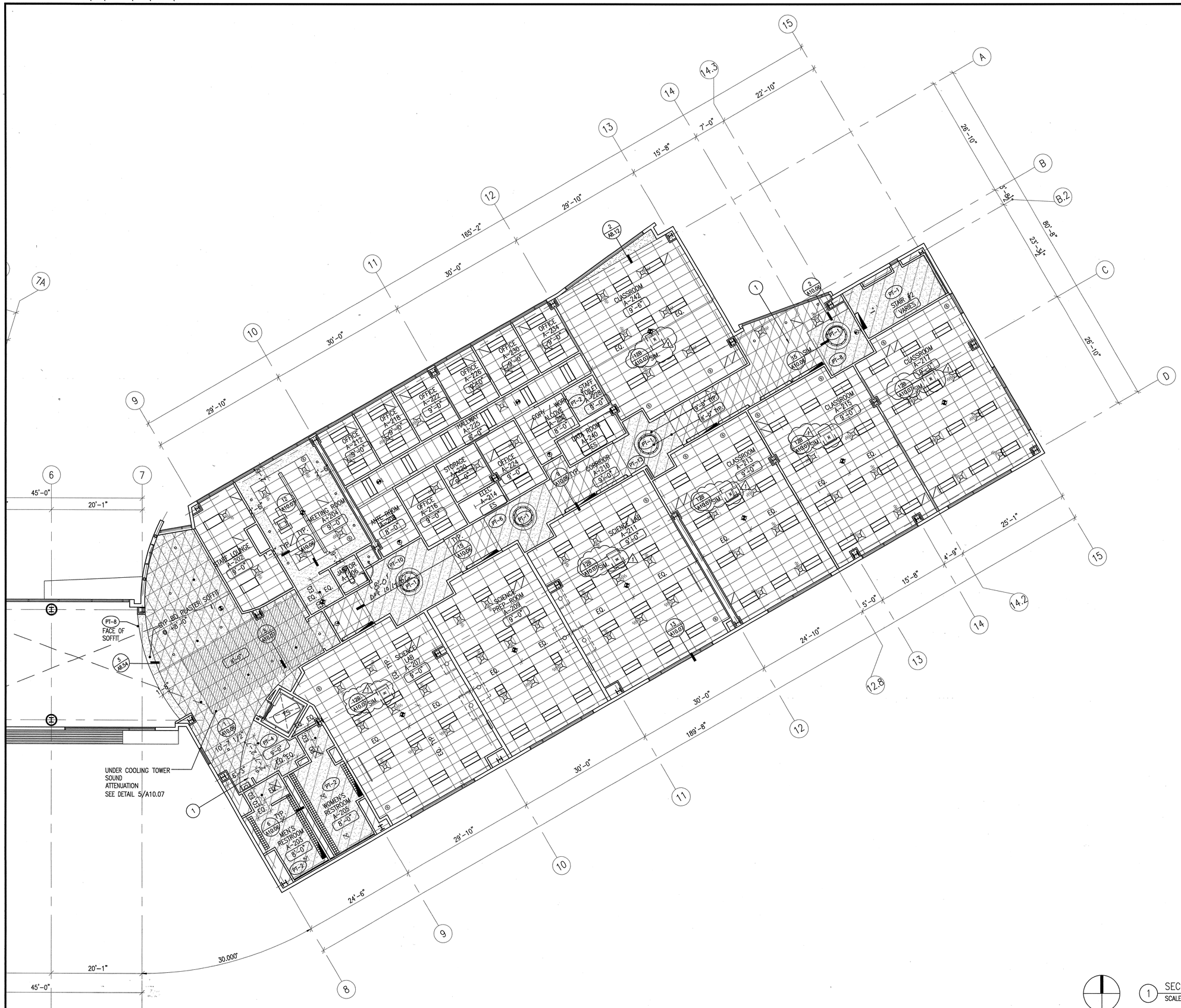

1 SECOND FLOOR RCP
SCALE 1/8" = 1'-0"

REFLECTED CEILING PLAN LEGEND

- ACOUSTIC CEILING TILES SEE A10.XX FOR SUSPENDED GRID REQUIREMENTS
- GYPSUM BOARD CEILING SEE A10.31 FOR SUSPENDED FRAMING REQ.
- GYPSUM BOARD CEILING SEE A10.31 FOR SUSPENDED FRAMING REQ.
- SEE ELECTRICAL LIGHTING DRAWINGS WITH LIGHT FIXTURE TYPES
- MECH DIFFUSER/RETURN GRILLE, SEE MECH. DRAWINGS
- E.S — EXPOSED STRUCTURE
- 9'-0" — CEILING HEIGHT A.F.F.
- CEILING MOUNTED SPEAKERS
- EXIT SIGN S.E.D.
- CEILING MOUNTED EQUIPMENT, SEE EQUIP. SCH.
- EXTERIOR WALL SCONCE
- CEILING RECESSED PROJECTOR LIFT

GENERAL NOTES

A SEE MECHANICAL AND ELECTRICAL FOR ADDITIONAL DEVICES AND FIXTURES NOT INDICATED.
B CENTER CEILING GRID IN ROOMS U.O.N. CENTER LIGHT FIXTURES IN G.W.B. CEILINGS U.O.N.
C NO CUT CEILING TILES LESS THAN 6" ALLOWED.
D CENTER SMOKE DETECTORS, THERMAL DETECTORS, SPRINKLER HEADS, MECH. DIFFUSERS, LIGHT FIXTURES IN CEILING TILES,
E ALL CEILING SUSPENSION SYSTEMS SHALL HAVE SEISMIC RESTRAINTS PER LOCAL BUILDING CODES AND ORDINANCES.
F PROVIDE 2'-0"x2'-0" ACCESS PANELS IN G.W.B CEILINGS, AS REQUIRED FOR MECH. & ELEC. CO-ORDINATE WITH MECH & ELEC.
G IN DOUBLE HEIGHT SPACES, CEILING HEIGHT GIVEN IS FROM FINISH FLOOR OF PLAN ON WHICH IT IS DRAWN.
H SEE ROOM FINISH SCHEDULE FOR ADDITIONAL INFO.

KEY NOTES

1 AREA OF CROSS HATCH INDICATES REQUIRED 1-HOUR FIRE RESISTIVE CEILING, ROOF ASSEMBLY PER GYPSUM ASSOCIATION FILE NO. FC 5406 SEE DETAIL 6/A8.54.

APPROVAL STAMP
IDENTIFICATION STAMP
DIVISION OF THE STATE ARCHITECT
APPL 02- **107417**
AC ____ FLS ____ SS ____
DATE: ____

NO.	ISSUED FOR	DATE
1	DSA APPROVAL SET	12/08/05
1	ADDENDUM #1	02/03/06

LICENSED ARCHITECT ROY S. LAMA NO. C7256 EXP. 7-31-07 STATE OF CALIFORNIA CERTIFIED

K M D
KAPLAN McLAUGHLIN DIAZ
ARCHITECTURE PLANNING
222 VALLEJO SAN FRANCISCO, CA 94111
(415) 398-5191 FAX (415) 394-7158

SOLANO COMMUNITY COLLEGE

SCCD
VALLEJO CENTER
Contract # A003.6123.01.V1

PROJECT NO. 419-201
DATE 12-08-05

PARTIAL SECOND FLOOR CEILING PLAN
AS BUILTS

A4.21

PLOT DATE:

COPYRIGHT © 2004 BY KMD (KAPLAN McLAUGHLIN DIAZ). ALL RIGHTS RESERVED.

PATH: G:\000\000-000\ACAD\SHEETS\

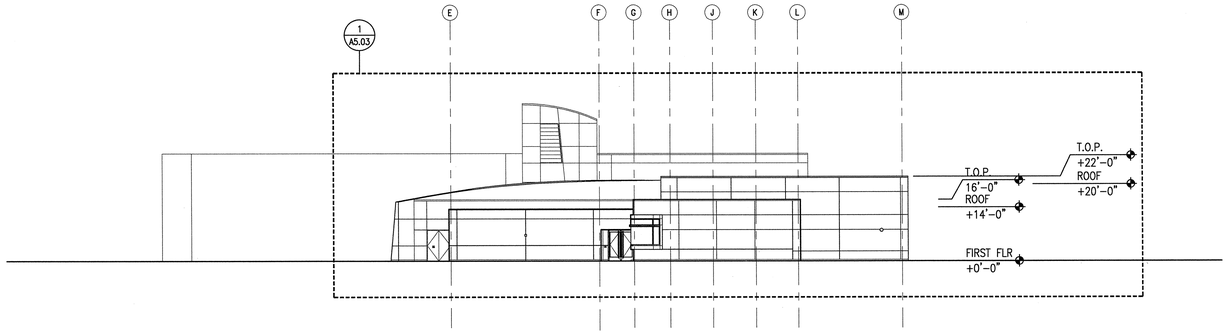

1 WEST ELEVATION
SCALE 1/16"=1'-0"

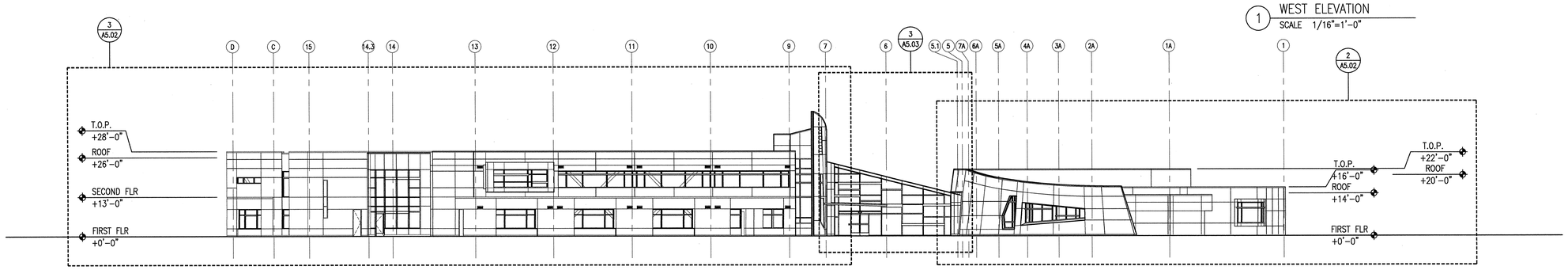

2 NORTH ELEVATION
SCALE 1/16"=1'-0"

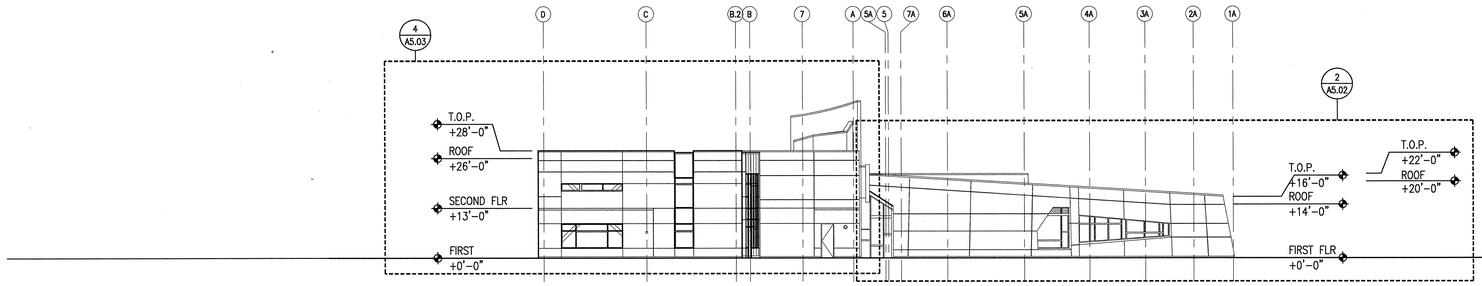

3 EAST ELEVATION
SCALE 1/16"=1'-0"

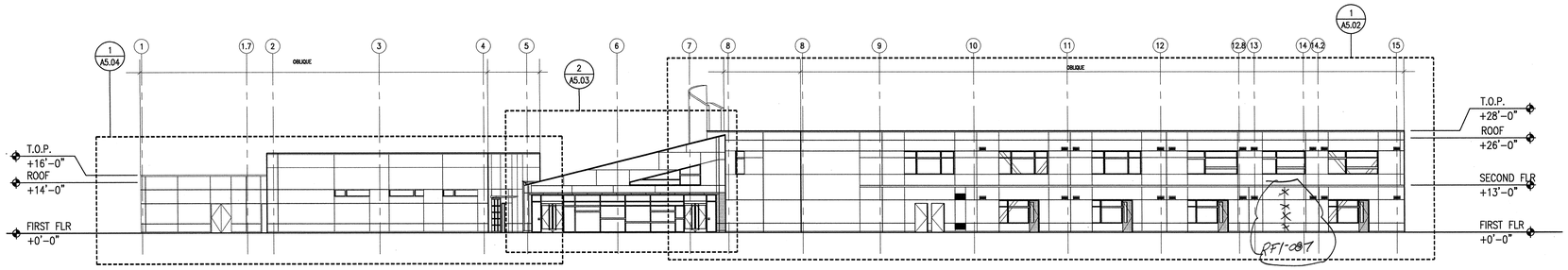

4 SOUTH ELEVATION
SCALE 1/16"=1'-0"

SHEET NOTE:

0'-0" = CITY DATUM
ELEVATION +231.00'

APPROVAL STAMP
IDENTIFICATION STAMP
DIVISION OF THE STATE ARCHITECT
APP. 02- 107417
AS FLS TH SS
DATE: 12/21/05

NO.	ISSUED FOR	DATE
1	DSA APPROVAL SET	12/08/05

LICENSED ARCHITECT ROY S. LATKA NO. C7256 REN. 7-31-05 STATE OF CALIFORNIA
CERTIFIED BY

K M D
KAPLAN McLAUGHLIN DIAZ
ARCHITECTURE PLANNING
222 VALLEJO SAN FRANCISCO, CA 94111
(415) 398-5191 FAX (415) 394-7158

SOLANO COMMUNITY COLLEGE

SCCD
VALLEJO CENTER
Contract # A003.6123.01.V1

PROJECT NO. 419-201
DATE 12-08-05

OVERALL EXTERIOR ELEVATIONS
AS BUILTS

A5.01

PLOT DATE:

COPYRIGHT © 2004 BY KMD (KAPLAN McLAUGHLIN DIAZ). ALL RIGHTS RESERVED.

PATH: G:\000\000-000\ACAD\SHEETS\

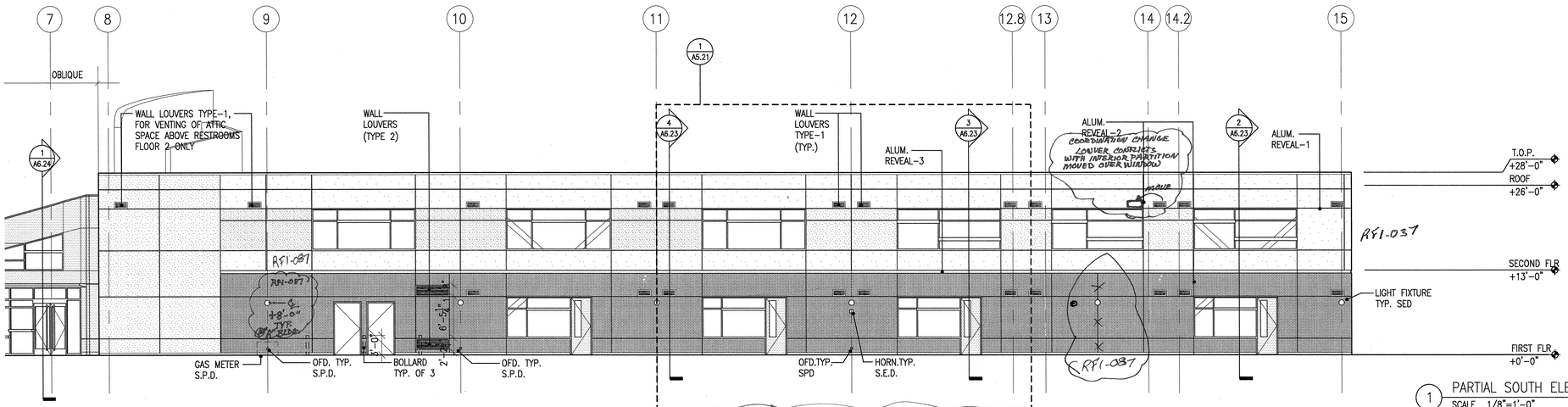

1 PARTIAL SOUTH ELEVATION–BUILDING A
SCALE 1/8"=1'-0"

Copy sent by e-mail to: AIRE S. M. July 12, 2006

Ralph Larsen & Son, Inc.
General Contractors License No. 185341
300 8th Avenue
San Mateo, CA 94401-4221
Phone: (650) 579-0228
Fax: (650) 579-0349

Request for Information 037

Detailed, RFIs Grouped by RFI Number

Subject Wall louvers appear to be in conflict with columns
Discipline
Category

Cc: Company Name | Contact Name | Copies | Notes

Question Date Required: 7/8/2006

Review the attached RFI-4 by Aire Sheet Metal's detailer. There are louvers are shown on A5.02. They are approximately 24x12, bottom at +/- 9'-0". For the most part they have been placed either side of a column with a few exceptions. They are:
South side, 1st & 2nd floor at #15 line.
North side, 1st & 2nd floor at #9 line; 2nd floor at #12 line; and 1st & 2nd floor at #13 line.
These louvers appear to be behind steel columns and cannot be ducted to.
There are no dimensions in the contract drawings to indicate where any of the louvers are located, so its difficult to ascertain which of the louvers clear the columns and wall constructions and which ones are blocked. Detail 1/A8.02 is an enlarged detail of the second floor area where louvers are shown at GRID LINES 12 and 13. This detail may be good back ground to show how to get the 24" X 12" louvers and the required ductwork to fit beside the columns and the inside corner of plaster finish at GRID 13.
1. Will you provide dimensions for the placement of these louvers and resolve the conflicts of the 7 louvers that appear to be blocked?

Suggestion

Answer Date Answered:

1) 1st & 2nd fl @ #15 line: (2) louvers, no conflict apparent, ample space appears adjacent to column to locate louver & ductwork, locate louver/ductwork min. dim away from column, exact dim. not critical
2) 1st & 2nd fl @ #9 line: (2) louvers, no conflict apparent, ample space appears adjacent to column, to locate louver/ductwork, locate louver/ductwork min. dim. away from column, exact dim not critical.
3) 2nd fl. @ #12 line: (1) louver, no conflict apparent, ample space appears

Project Manager | Printed on: 6/23/2006 | RALPH | Page 1

adjacent to column to locate louver/ductwork, locate louver/ductwork min. dim. away from column, exact dim. not critical.
4) 1st fl. @ #13 line: (1) louver, no conflict apparent, ample space appears adjacent to column, locate louver/ductwork, locate louver/ductwork min. dim. away from column, exact dim. not critical.
5) 2nd fl @ #13 line: (1) louver, conflict appears, does not appear to be adequate space to locate diffuser, rotate diffuser & transition duct work to vertical louver orientation, locate louver/ductwork min. dim. away from column, exact dim is not critical.

1. Color sample will be provided upon receipt of Submittal Samples for specification section 09900.

Louver Type #1-A (First Floor Locations):
Color to match Cement Plaster color CP-2(Sherman Williams SW6355-True Penny)

Louver Type #1-B (Second Floor Locations):
Clear Anodized Aluminum to match reveal color.

Louver Type #2 (First Floor Locations):
Color to match Cement Plaster color CP-2(Sherman Williams SW6355-True Penny)

Melanie Kung/KMD
11/16/06

RFI-194

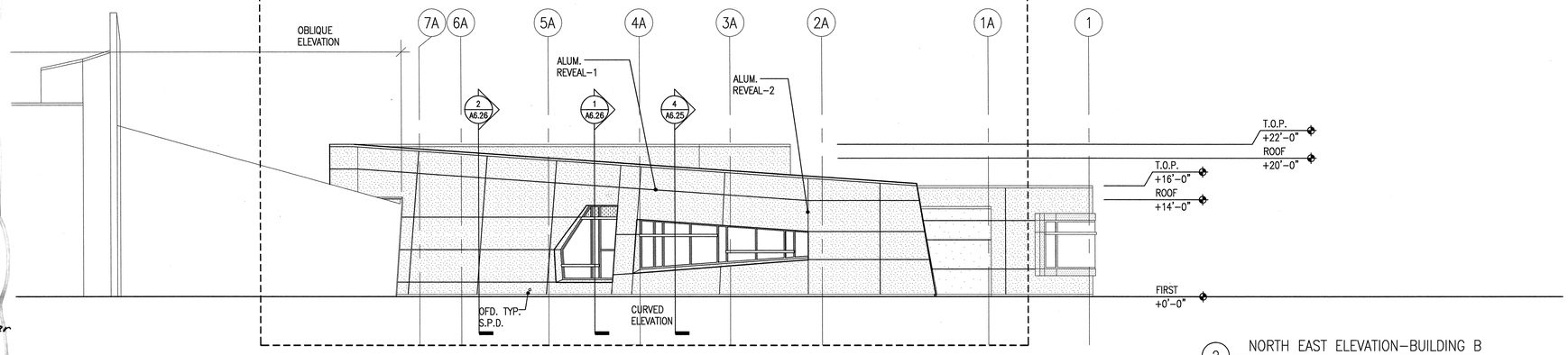

2 NORTH EAST ELEVATION–BUILDING B
SCALE 1/8"=1'-0"

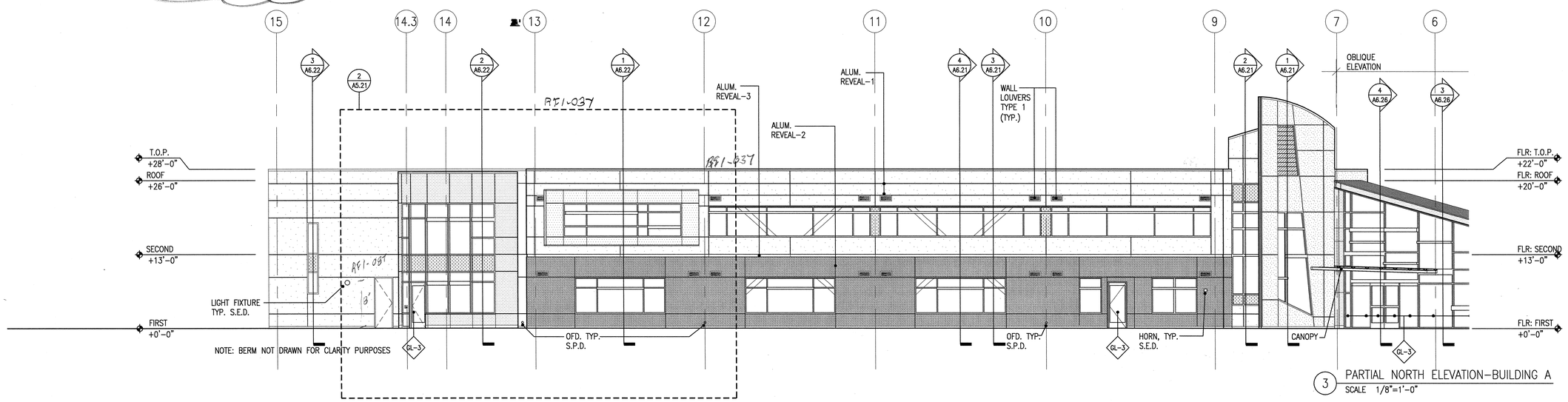

3 PARTIAL NORTH ELEVATION–BUILDING A
SCALE 1/8"=1'-0"

MATERIAL LEGEND

- CP-1 CEMENT PLASTER (SMOOTH FINISH. COLOR TO MATCH SHERWIN-WILLIAMS "EXTRA WHITE" SW 7006)
- CP-2 CEMENT PLASTER (TEXTURED FINISH. COLOR TO MATCH SHERWIN-WILLIAMS "TRUEPENNY" SW 6355)
- CP-3 CEMENT PLASTER (SMOOTH FINISH. COLOR TO MATCH SHERWIN-WILLIAMS "DENIM" SW 6523)
- CP-4 CEMENT PLASTER (SMOOTH FINISH. COLOR TO MATCH SHERWIN-WILLIAMS "IVOIRE" 6217)
- GL-1 VISION GLASS
- GL-2 SPANDREL GLASS
- GL-3 GL-3 TEMPERED GLASS
- GL-5 TRANSLUCENT GLASS
- GL-9.2 SAND BLASTED GLASS
- COMPOSITE METAL PANEL-1
- COMPOSITE METAL PANEL-2

SHEET NOTES

1. ALL EXTERIOR GLAZING TYPE GL-1 U.O.N.
2. 0'-0" CITY DATUM ELEVATION +231.00'
3. SHT. MET. FLASHING ON FIRST FLOOR CONC. CURB PAINT TO MATCH CEMENT PLASTER COLOR IMMEDIATELY ABOVE. NO PAINT WHEN UNDER COMPOSITE METAL PANEL.
3. ALL HORIZONTAL ALUMINUM REVEALS ARE TYPE-1, ALL VERTICAL REVEALS ARE TYPE-2, U.O.N.
3. SEE DETAILS 1 & 2 ON SHEET A8.15 FOR WATERPROOFING APPLICATION SEQUENCE FOR OPENINGS IN EXTERIOR CEMENT PLASTER WALLS.

APPROVAL STAMP
IDENTIFICATION STAMP
DIVISION OF THE STATE ARCHITECT
APP'D 07- 107417
APP'D FLS ~~TH~~ SS AVL
DATE: 12/21/05

NO.	ISSUED FOR	DATE
1	DSA APPROVAL SET	12/08/05

LICENSED ARCHITECT ROY S. LANGE NO. C7256 REN 7-31-07 STATE OF CALIFORNIA CERTIFIED

K M D
KAPLAN McLAUGHLIN DIAZ
ARCHITECTURE PLANNING
222 VALLEJO SAN FRANCISCO, CA 94111
(415) 398-5191 FAX (415) 394-7158

SOLANO COMMUNITY COLLEGE

SCCD
VALLEJO CENTER
Contract # A003.6123.01.V1

PROJECT NO. 419-201 | DATE 12-08-05

EXTERIOR ELEVATIONS
AS BUILTS

A5.02

PLOT DATE:

COPYRIGHT © 2004 BY KMD (KAPLAN McLAUGHLIN DIAZ). ALL RIGHTS RESERVED.

PATH: G:\000\000-000\ACAD\SHEETS\

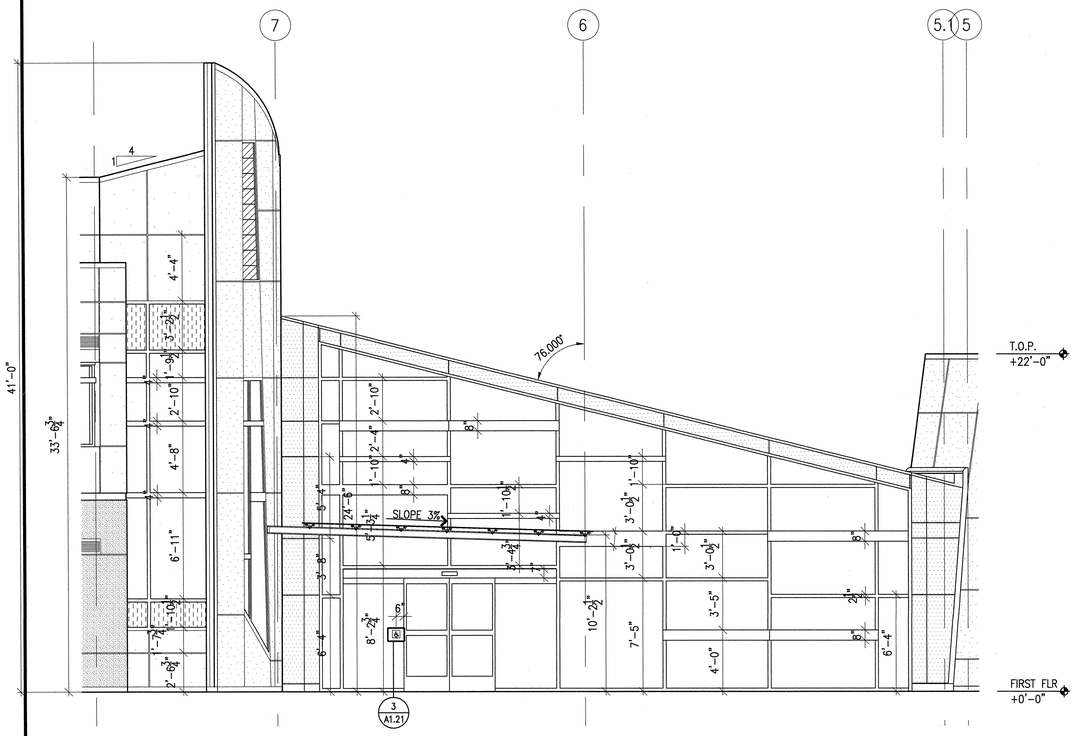

2 PARTIAL NORTH ELEVATION
SCALE 1/4"=1'-0"

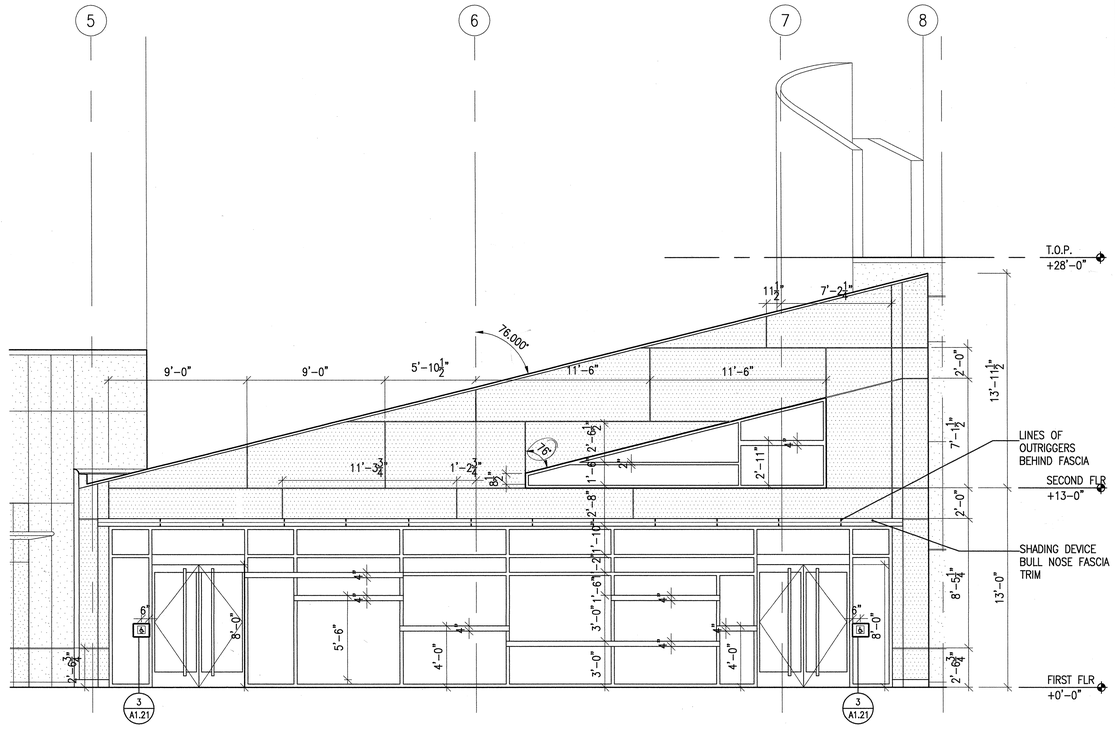

1 PARTIAL SOUTH ELEVATION
SCALE 1/4"=1'-0"

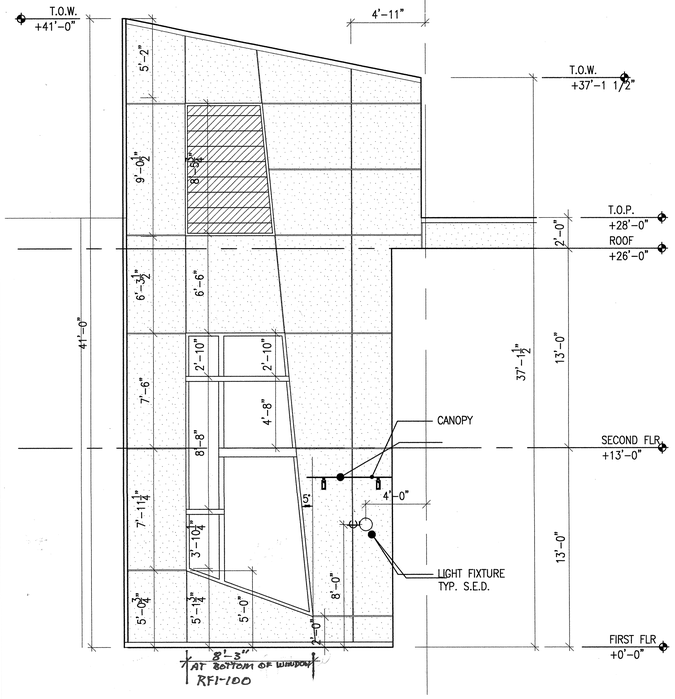

4 PARTIAL NORTH ELEVATION
SCALE 1/4"=1'-0"

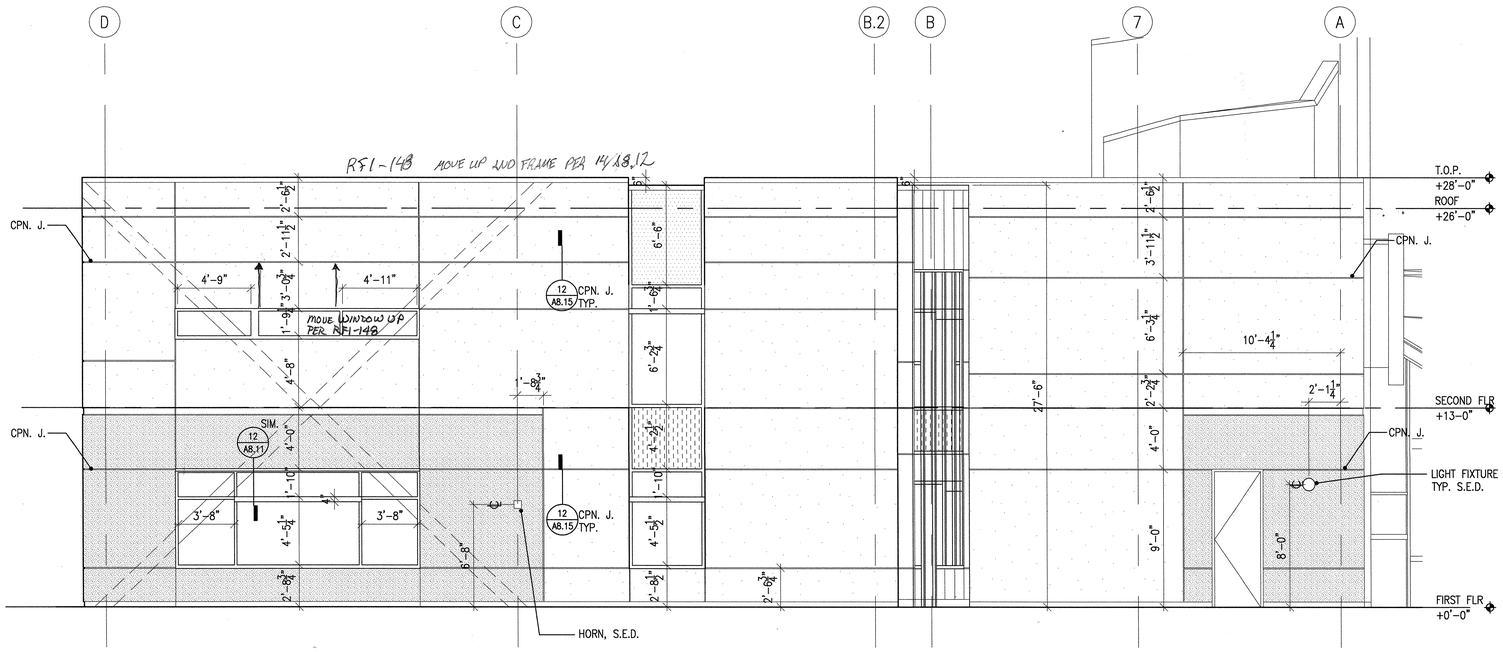

3 EAST ELEVATION
SCALE 1/4"=1'-0"

MATERIAL LEGEND

- CP-1 CEMENT PLASTER (SMOOTH FIN. COLOR TO MACTH SHERWIN-WILLIAMS "EXTRA WHITE" SW 7006)
- CP-2 CEMENT PLASTER (TEXTURED FIN. COLOR TO MATCH SHERWIN-WILLIAMS "TRUEPENNY" SW 6355)
- CP-3 CEMENT PLASTER (SMOOTH FINISH. COLOR TO MATCH SHERWIN-WILLIAMS "DENIM" 6523)
- CP-4 CEMENT PLASTER (SMOOTH FINISH. COLOR TO MATCH SHERWIN-WILLIAMS "IVOIRE" 6217)
- GL-1 VISION GLASS
- GL-2 SPANDREL GLASS
- GL-5 TRANSLUCENT GLASS
- GL-9.2 SAND BLASTED GLASS
- COMPOSITE METAL PANEL-1
- COMPOSITE METAL PANEL-2

SHEET NOTES

1. ALL EXTERIOR GLAZING TYPE GL-1 U.O.N.
2. 0'-0" CITY DATUM ELEVATION +231.00'
3. SHT. MET. FLASHING ON FIRST FLOOR CONC. CURB PAINT TO MATCH CEMENT PLASTER COLOR IMMEDIATELY ABOVE. NO PAINT WHEN UNDER COMPOSITE METAL PANEL.
4. ALL HORIZONTAL ALUMINUM REVEALS ARE TYPE-1, ALL VERTICAL REVEALS ARE TYPE-2, U.O.N.
5. SEE DETAILS 1 & 2 ON SHEET A8.15 FOR WATERPROOFING APPLICATION SEQUENCE FOR OPENINGS IN EXTERIOR CEMENT PLASTER WALLS.

APPROVAL STAMP
IDENTIFICATION STAMP
DIVISION OF THE STATE ARCHITECT
APPL 02- 107417
AC FLS SS
DATE: 12/21/05

NO.	ISSUED FOR	DATE
1	DSA APPROVAL SET	12/08/05

LICENSED ARCHITECT ROY S. LATKA NO. C7256 REN. 7-31-05 STATE OF CALIFORNIA
CERTIFIED BY:

K M D
KAPLAN McLAUGHLIN DIAZ
ARCHITECTURE PLANNING
222 VALLEJO SAN FRANCISCO, CA 94111
(415) 398-5191 FAX (415) 394-7158

SOLANO COMMUNITY COLLEGE

SCCD
VALLEJO CENTER
Contract # A003.6123.01.V1

PROJECT NO.	DATE
419-201	12-08-05

DETAILED EXTERIOR ELEVATIONS
AS BUILTS

A5.22

PLOT DATE:

COPYRIGHT © 2004 BY KMD (KAPLAN McLAUGHLIN DIAZ). ALL RIGHTS RESERVED.

PATH: G:\000\000-000\ACAD\SHEETS\

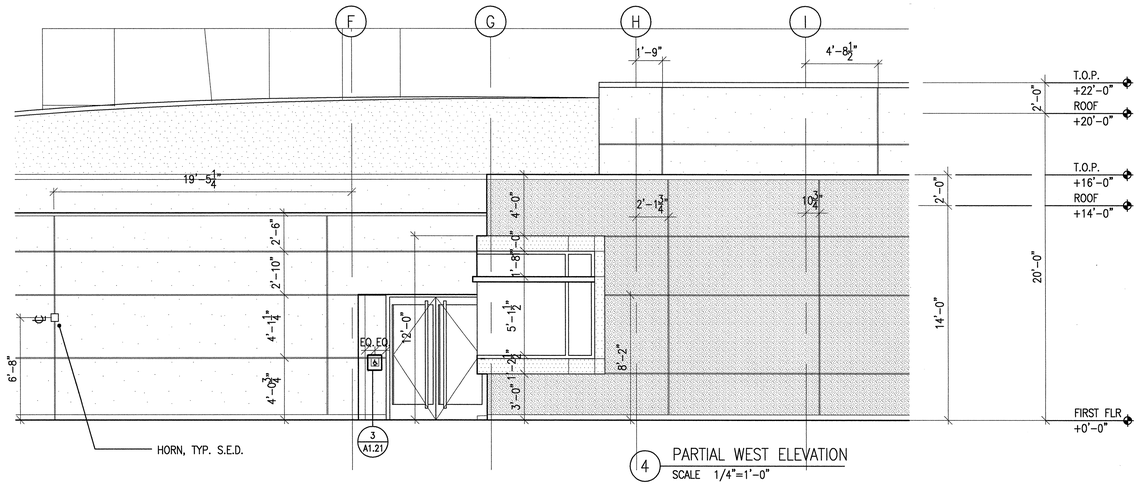

4 PARTIAL WEST ELEVATION
SCALE 1/4"=1'-0"

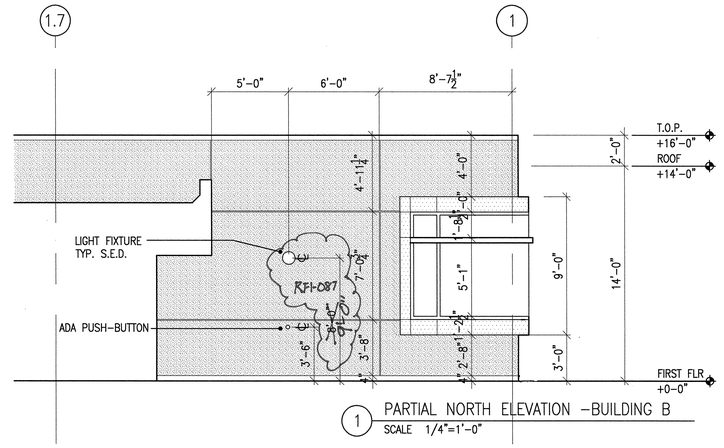

1 PARTIAL NORTH ELEVATION -BUILDING B
SCALE 1/4"=1'-0"

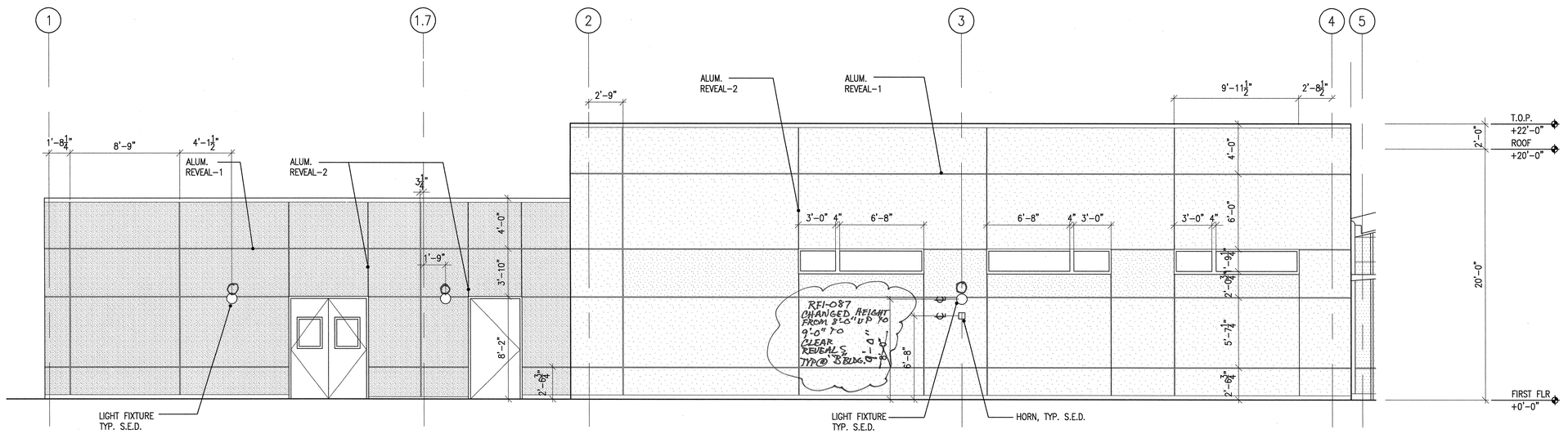

2 PARTIAL SOUTH ELEVATION
SCALE 1/4"=1'-0"

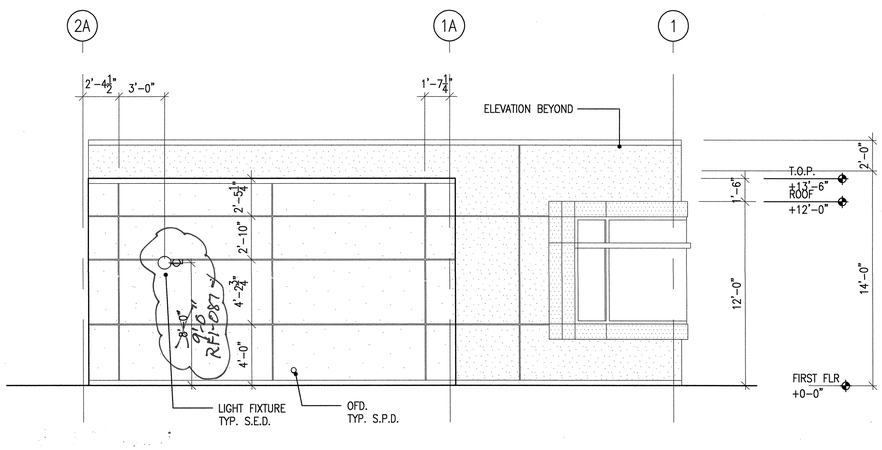

5 PARTIAL NORTH ELEVATION -BUILDING B
SCALE 1/4"=1'-0"

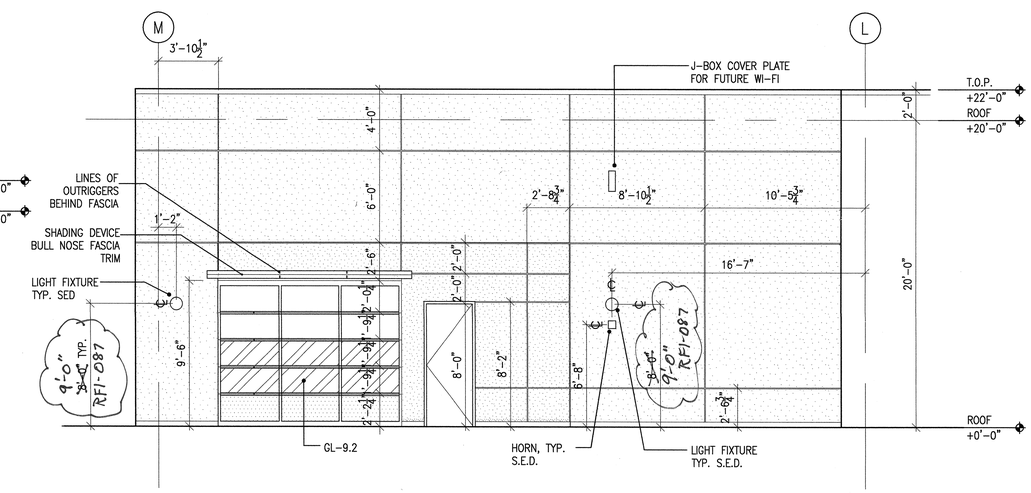

3 PARTIAL EAST ELEVATION
SCALE 1/4"=1'-0"

MATERIAL LEGEND

- CP-1 CEMENT PLASTER (SMOOTH FIN. COLOR TO MACTH SHERWIN-WILLIAMS "EXTRA WHITE' SW 7006)
- CP-2 CEMENT PLASTER (TEXTURED FIN. COLOR TO MATCH SHERWIN-WILLIAMS "TRUEPENNY" SW 6355)
- CP-3 CEMENT PLASTER (SMOOTH FINISH. COLOR TO MATCH SHERWIN-WILLIAMS "DENIM" 6523)
- CP-4 CEMENT PLASTER (SMOOTH FINISH. COLOR TO MATCH SHERWIN-WILLIAMS "IVOIRE" 6217)
- GL-1 VISION GLASS
- GL-2 SPANDREL GLASS
- GL-5 TRANSLUCENT GLASS
- GL-9.2 SAND BLASTED GLASS
- COMPOSITE METAL PANEL-1
- COMPOSITE METAL PANEL-2

SHEET NOTES

1. ALL EXTERIOR GLAZING TYPE GL-1 U.O.N.
2. 0'-0" CITY DATUM ELEVATION +231.00'
3. SHT. MET. FLASHING ON FIRST FLOOR CONC. CURB PAINT TO MATCH CEMENT PLASTER COLOR IMMEDIATELY ABOVE. NO PAINT WHEN UNDER COMPOSITE METAL PANEL.
4. ALL HORIZONTAL ALUMINUM REVEALS ARE TYPE-1, ALL VERTICAL REVEALS ARE TYPE-2, U.O.N.
5. SEE DETAILS 1 & 2 ON SHEET A8.15 FOR WATERPROOFING APPLICATION SEQUENCE FOR OPENINGS IN EXTERIOR CEMENT PLASTER WALLS.

APPROVAL STAMP
IDENTIFICATION STAMP
DIVISION OF THE STATE ARCHITECT
APP'D 02- 107417
FLS TH SS WL
DATE: 12/21/05

NO.	ISSUED FOR	DATE
1	DSA APPROVAL SET	12/08/05

LICENSED ARCHITECT ROY S. LATKA No. C7256 REN. 7-31-06 STATE OF CALIFORNIA
CERTIFIED ACCESS SPECIALIST

K M D
KAPLAN McLAUGHLIN DIAZ
ARCHITECTURE PLANNING
222 VALLEJO SAN FRANCISCO, CA 94111
(415) 398-5191 FAX (415) 394-7158

SOLANO COMMUNITY COLLEGE

SCCD
VALLEJO CENTER
Contract # A003.6123.01.V1

PROJECT NO.	DATE
419-201	12-08-05

DETAILED EXTERIOR ELEVATIONS
AS BUILTS

A5.23

PLOT DATE:

COPYRIGHT © 2004 BY KMD (KAPLAN McLAUGHLIN DIAZ). ALL RIGHTS RESERVED.

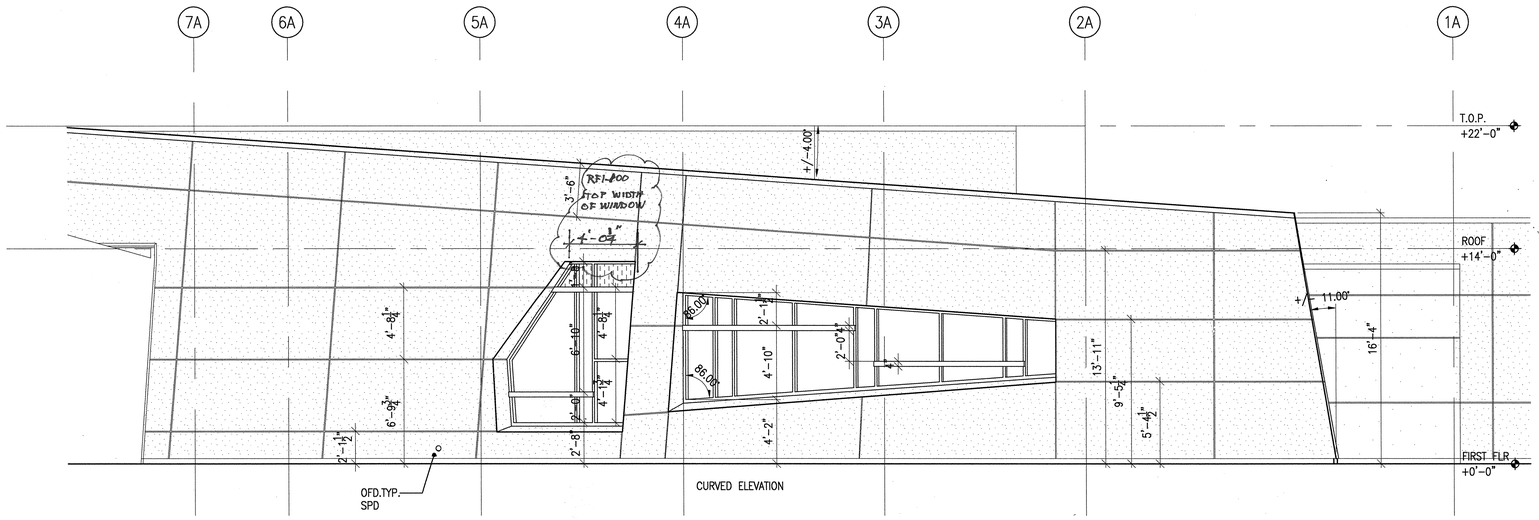

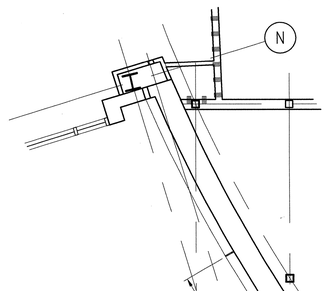

1 PARTIAL NORTH ELEVATION TRUNCATED WALL
SCALE 1/4"=1'-0"

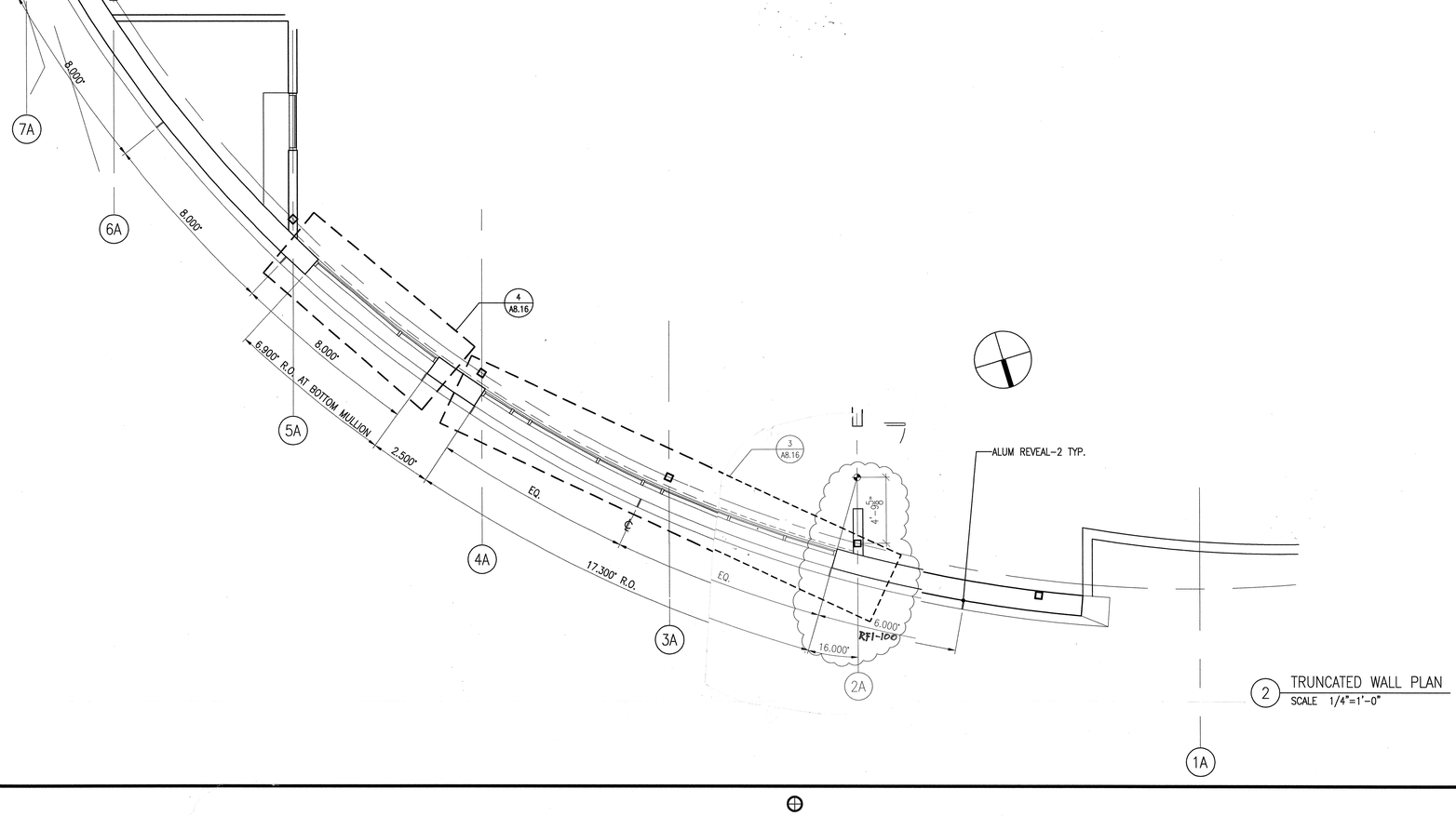

2 TRUNCATED WALL PLAN
SCALE 1/4"=1'-0"

MATERIAL LEGEND

- CP-1 CEMENT PLASTER (SMOOTH FIN. COLOR TO MACTH SHERWIN-WILLIAMS "EXTRA WHITE" SW 7006)
- CP-2 CEMENT PLASTER (TEXTURED FIN. COLOR TO MATCH SHERWIN-WILLIAMS "TRUEPENNY" SW 6355)
- CP-3 CEMENT PLASTER (SMOOTH FINISH COLOR TO MATCH SHERWIN-WILLIAMS "DENIM" 6523)
- CP-4 CEMENT PLASTER (SMOOTH FINISH COLOR TO MATCH SHERWIN-WILLIAMS "IVOIRE" 6217)
- GL-1 VISION GLASS
- GL-2 SPANDREL GLASS
- GL-5 TRANSLUCENT GLASS
- GL-9.2 SAND BLASTED GLASS
- COMPOSITE METAL PANEL-1
- COMPOSITE METAL PANEL-2

SHEET NOTES

1. ALL EXTERIOR GLAZING TYPE GL-1 U.O.N.
2. 0'-0" CITY DATUM ELEVATION +231.00'
3. SHT. MET. FLASHING ON FIRST FLOOR CONC. CURB PAINT TO MATCH CEMENT PLASTER COLOR IMMEDIATELY ABOVE. NO PAINT WHEN UNDER COMPOSITE METAL PANEL.
4. ALL HORIZONTAL ALUMINUM REVEALS ARE TYPE-1, ALL VERTICAL REVEALS ARE TYPE-2, U.O.N.
5. SEE DETAILS 1 & 2 ON SHEET A8.15 FOR WATERPROOFING APPLICATION SEQUENCE FOR OPENINGS IN EXTERIOR CEMENT PLASTER WALLS.

APPROVAL STAMP
IDENTIFICATION STAMP
DIVISION OF THE STATE ARCHITECT
APPL 02- 107417
AC FLS SS
DATE: 12/21/05

NO.	ISSUED FOR	DATE
1	DSA APPROVAL SET	12/08/05

LICENSED ARCHITECT ROY S. LAKE No. C7256 REN 7-31-07 STATE OF CALIFORNIA
CERTIFIED BY

K M D
KAPLAN McLAUGHLIN DIAZ
ARCHITECTURE PLANNING
222 VALLEJO SAN FRANCISCO, CA 94111
(415) 398-5191 FAX (415) 394-7158

SOLANO COMMUNITY COLLEGE

SCCD
VALLEJO CENTER
Contract # A003.6123.01.V1

PROJECT NO.	DATE
419-201	12-08-05

DETAILED EXTERIOR ELEVATION AND PLAN
AS BUILTS

A5.24

COPYRIGHT © 2004 BY KMD (KAPLAN McLAUGHLIN DIAZ). ALL RIGHTS RESERVED.

PATH: G:\000\000-000\ACAD\SHEETS\

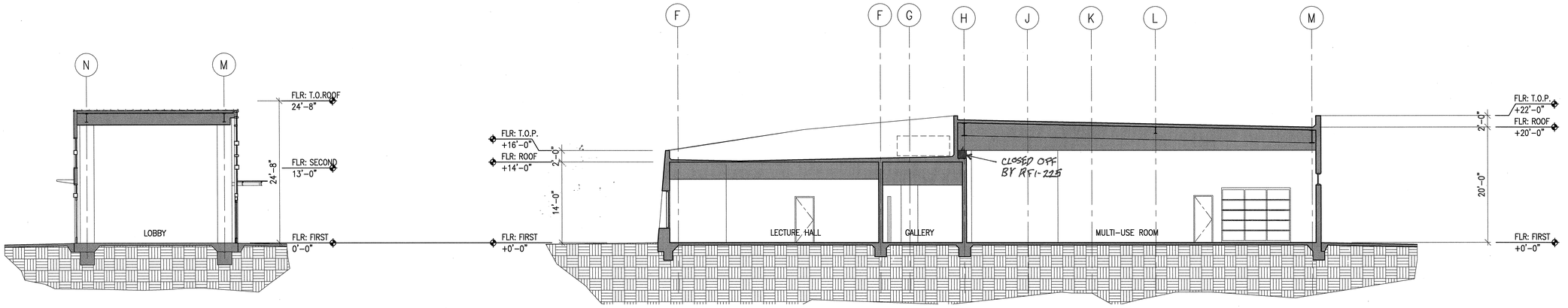

5 BUILDING SECTION
SCALE 1/8"=1'-0"

4 BUILDING SECTION
SCALE 1/8"=1'-0"

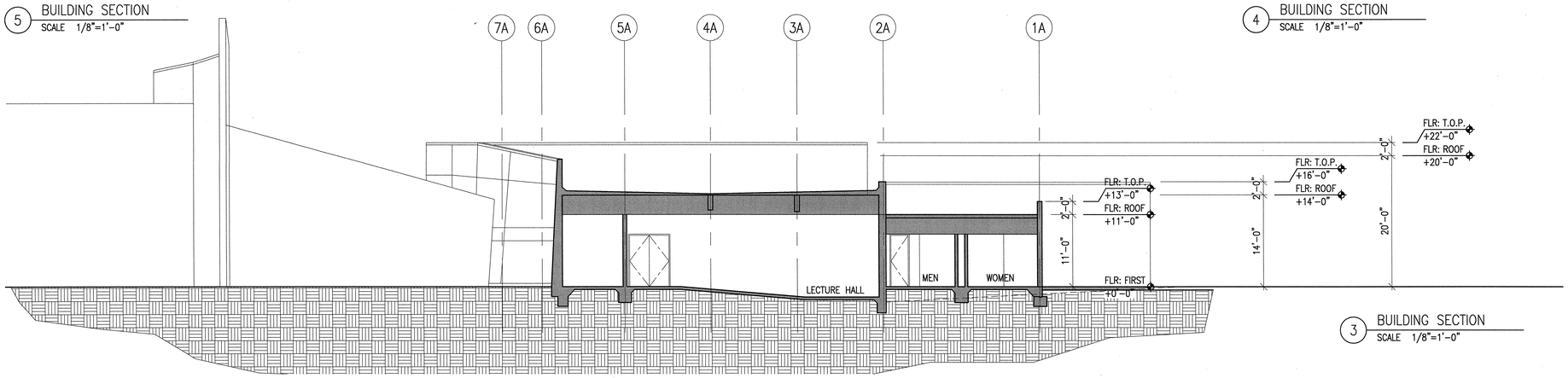

3 BUILDING SECTION
SCALE 1/8"=1'-0"

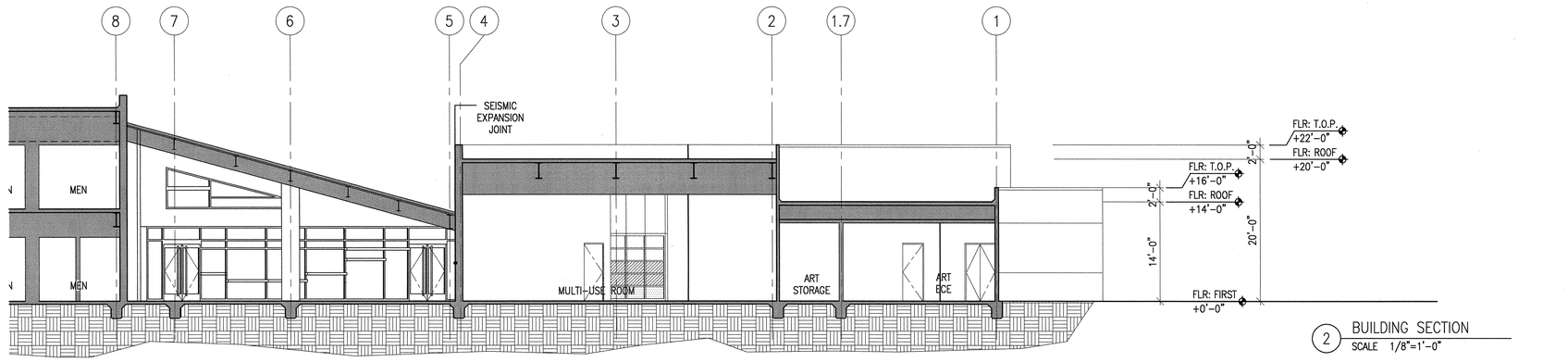

2 BUILDING SECTION
SCALE 1/8"=1'-0"

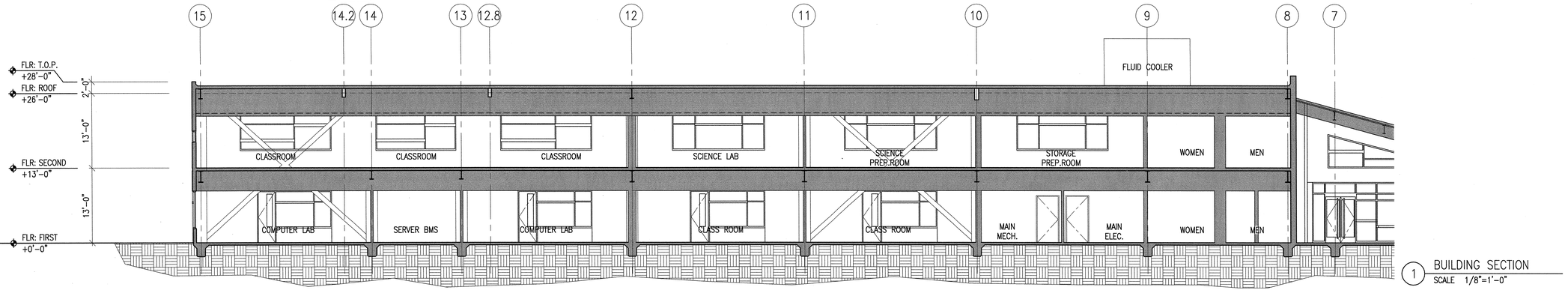

1 BUILDING SECTION
SCALE 1/8"=1'-0"

APPROVAL STAMP
IDENTIFICATION STAMP
DIVISION OF THE STATE ARCHITECT
APPL. 02- 107417
AC FLS SS
DATE: 12/21/05

NO.	ISSUED FOR	DATE
1	DSA APPROVAL SET	12/08/05

LICENSED ARCHITECT
ROY S. LANKA
No. C7256
REN. 7-31-06
STATE OF CALIFORNIA
CERTIFIED

K M D
KAPLAN McLAUGHLIN DIAZ
ARCHITECTURE PLANNING
222 VALLEJO SAN FRANCISCO, CA 94111
(415) 398-5191 FAX (415) 394-7158

SOLANO COMMUNITY COLLEGE

SCCD
VALLEJO CENTER
Contract # A003.6123.01.V1

PROJECT NO. 419-201
DATE 12-08-05

BUILDING SECTIONS
AS BUILTS

A6.01

PLOT DATE:

COPYRIGHT © 2004 BY KMD (KAPLAN McLAUGHLIN DIAZ). ALL RIGHTS RESERVED.

PATH: G:\000\000-000\ACAD\SHEETS\

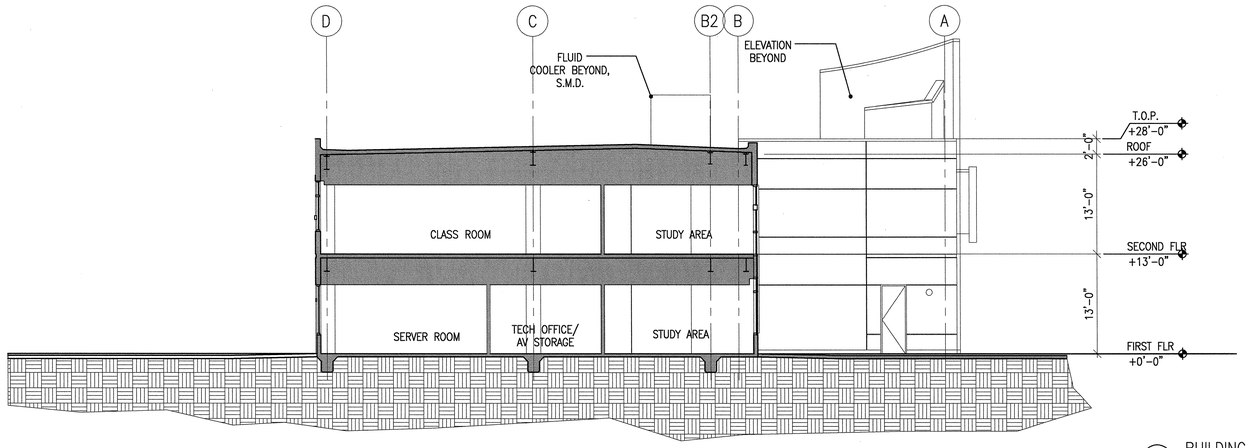

4 BUILDING SECTION
SCALE 1/8"=1'-0"

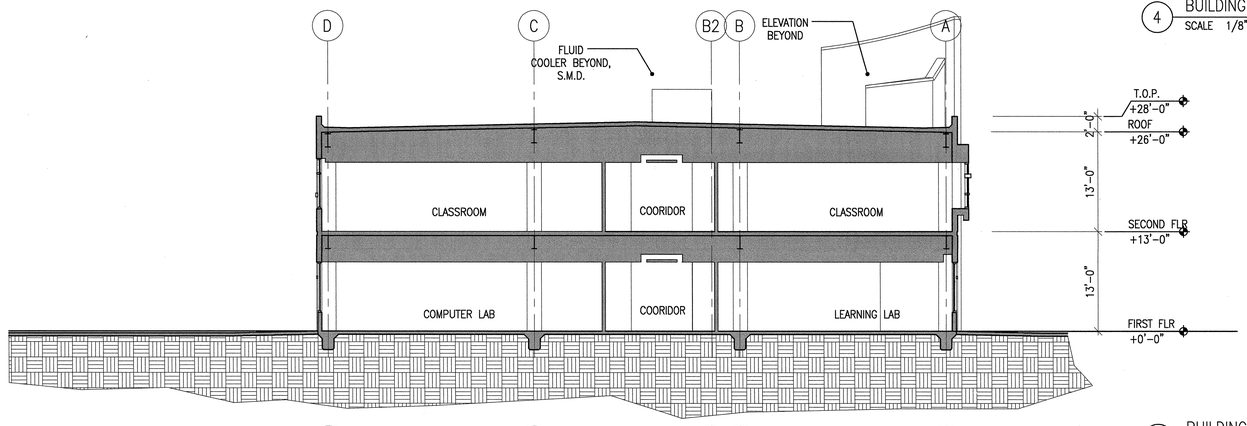

3 BUILDING SECTION
SCALE 1/8"=1'-0"

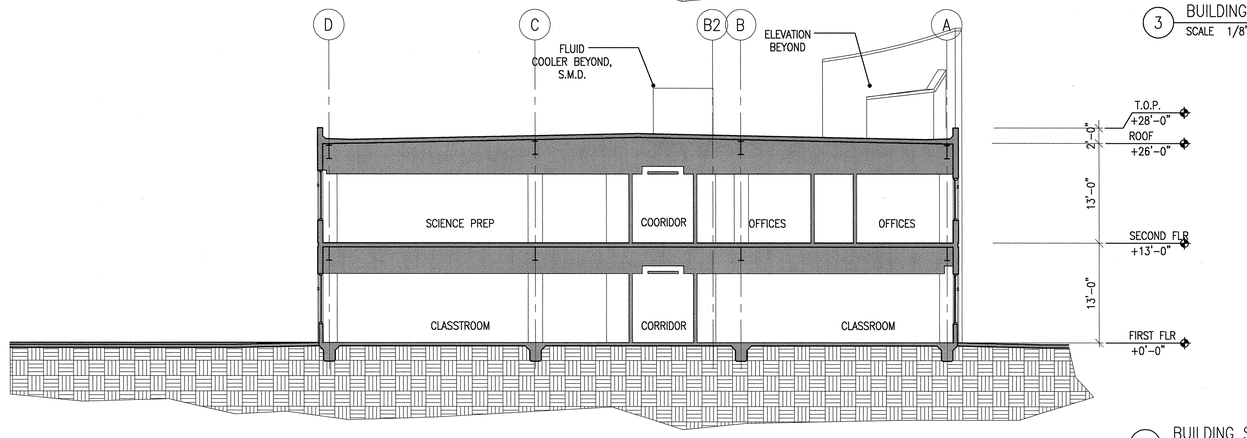

2 BUILDING SECTION
SCALE 1/8"=1'-0"

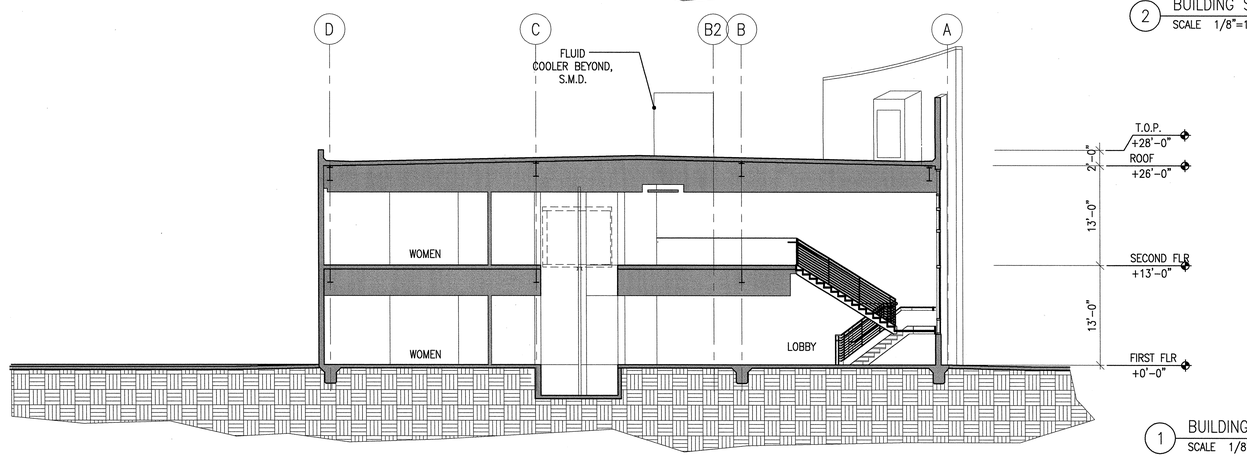

1 BUILDING SECTION
SCALE 1/8"=1'-0"

APPROVAL STAMP
IDENTIFICATION STAMP
DIVISION OF THE STATE ARCHITECT
APP'V 02- 107417
AC FLS SS
DATE: 12/21/05

NO.	ISSUED FOR	DATE
1	DSA APPROVAL SET	12/08/05

LICENSED ARCHITECT
ROY S. LAUNER
NO. C7256
REN. 7-31-07
STATE OF CALIFORNIA
CERTIFIED BY

K M D
KAPLAN McLAUGHLIN DIAZ
ARCHITECTURE PLANNING
222 VALLEJO SAN FRANCISCO, CA 94111
(415) 398-5191 FAX (415) 394-7158

SOLANO COMMUNITY COLLEGE

SCCD
VALLEJO CENTER
Contract # A003.6123.01.V1

PROJECT NO. 419-201
DATE 12-08-05

BUILDING SECTIONS
AS BUILTS

A6.02

PLOT DATE:

COPYRIGHT © 2004 BY KMD (KAPLAN McLAUGHLIN DIAZ). ALL RIGHTS RESERVED.

PATH: G:\000\000-000\ACAD\SHEETS\

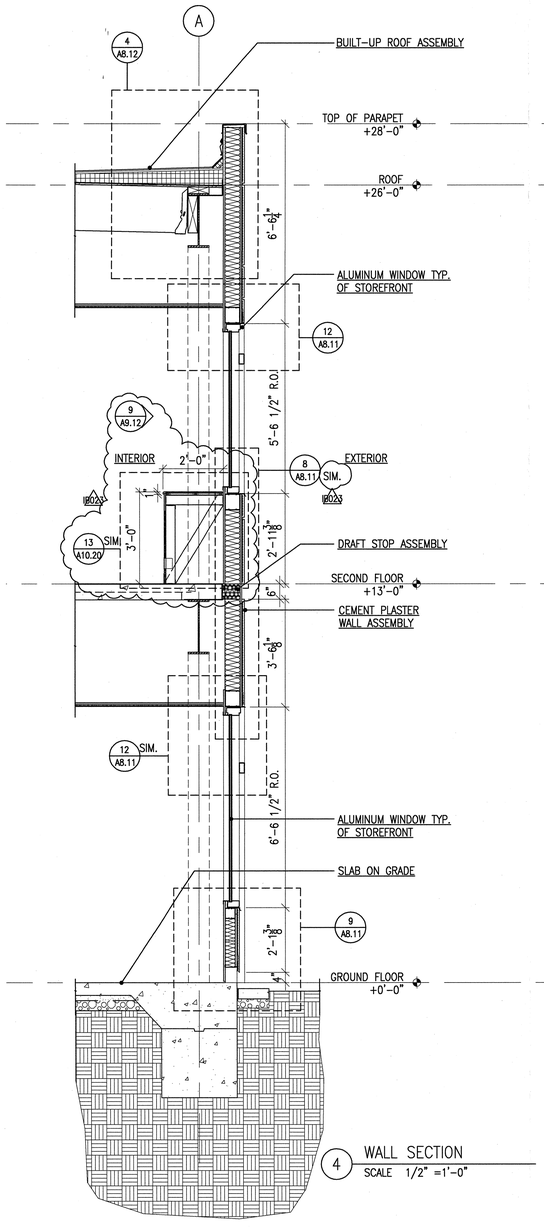

4 WALL SECTION
SCALE 1/2" =1'-0"

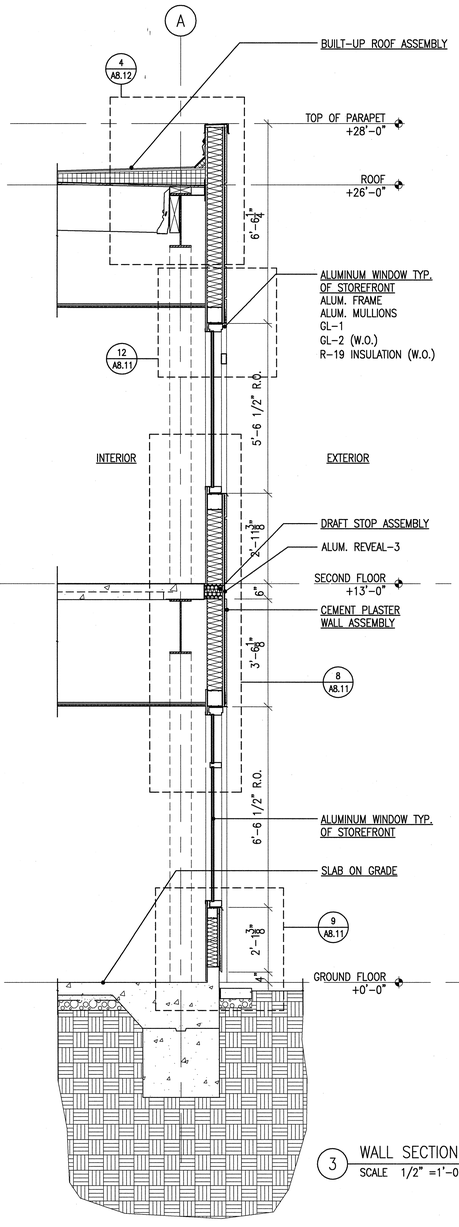

3 WALL SECTION
SCALE 1/2" =1'-0"

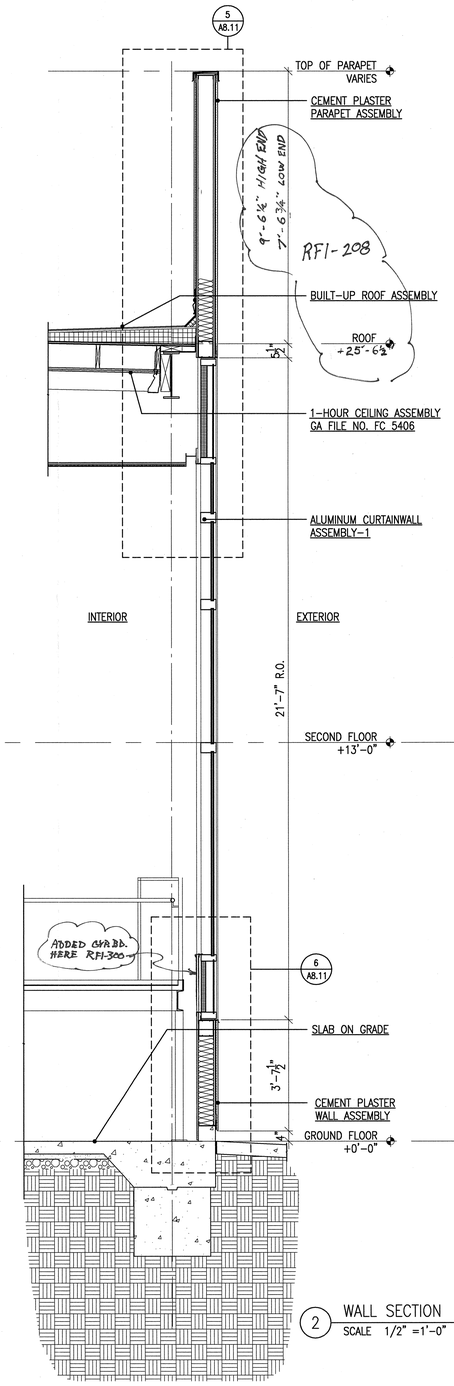

2 WALL SECTION
SCALE 1/2" =1'-0"

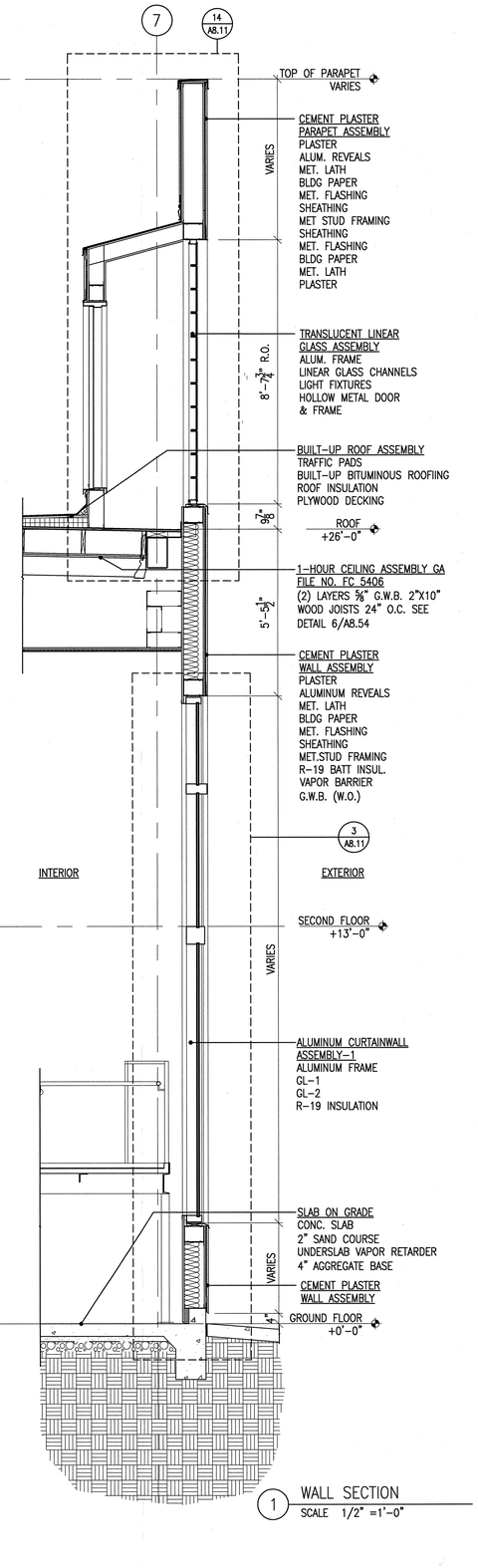

1 WALL SECTION
SCALE 1/2" =1'-0"

APPROVAL STAMP
IDENTIFICATION STAMP
DIVISION OF THE STATE ARCHITECT
APPL 02- 107417
AC ____ FLS ____ SS ____
DATE: ____

NO.	ISSUED FOR	DATE
IB023	INFORMATION BULLETIN #23	05/18/07
1	DSA APPROVAL SET	12/08/05

LICENSED ARCHITECT ROY S. LAMA NO. C7256 REN. 7-31-07 STATE OF CALIFORNIA CERTIFIED BY

K M D
KAPLAN McLAUGHLIN DIAZ
ARCHITECTURE PLANNING
222 VALLEJO SAN FRANCISCO, CA 94111
(415) 398-5191 FAX (415) 394-7158

SOLANO COMMUNITY COLLEGE

SCCD
VALLEJO CENTER
Contract # A003.6123.01.V1

PROJECT NO. 419-201
DATE 12-08-05

WALL SECTIONS

A6.21

PLOT DATE:

COPYRIGHT © 2004 BY KMD (KAPLAN McLAUGHLIN DIAZ). ALL RIGHTS RESERVED.

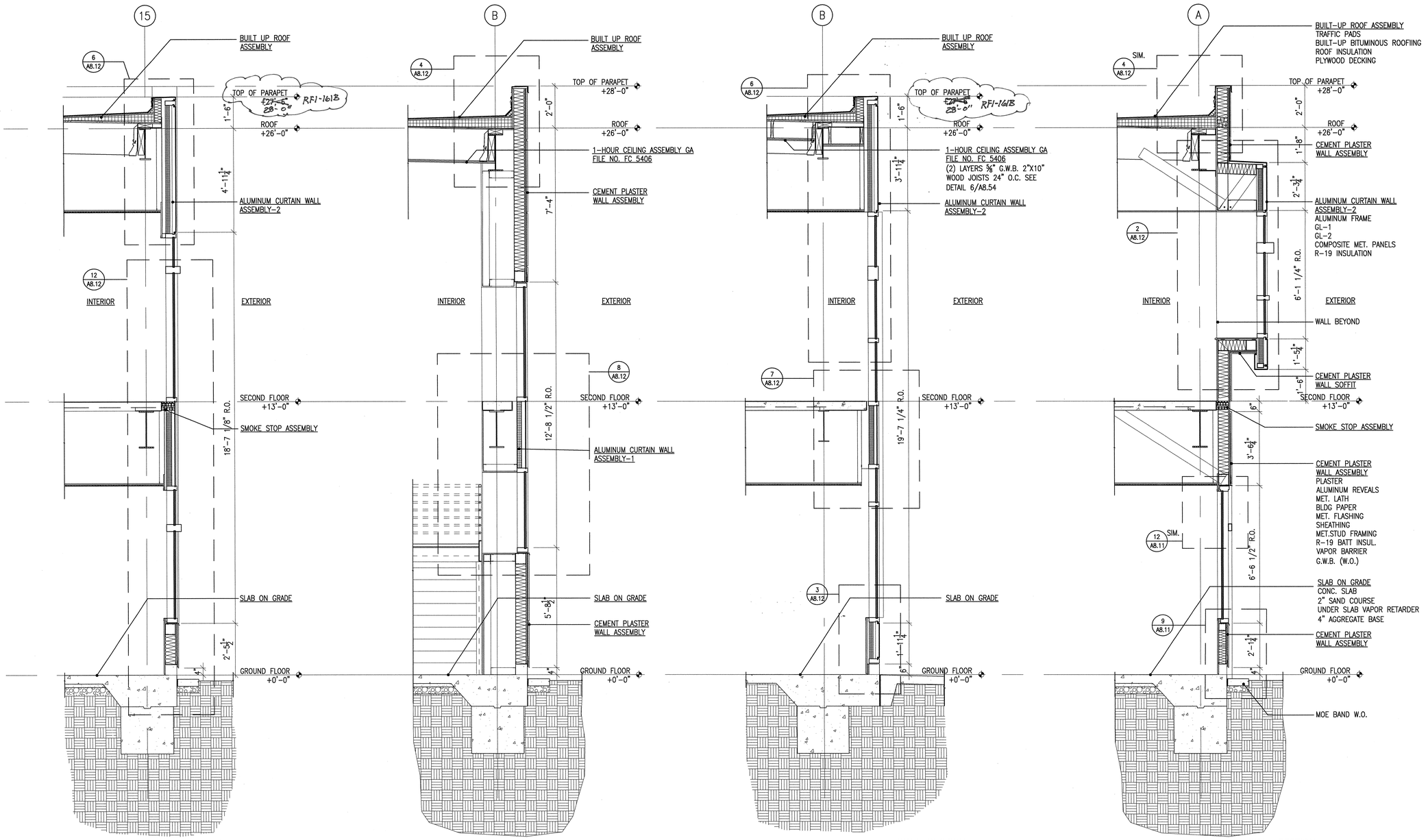

4 WALL SECTION
SCALE 1/2"=1'-0"

3 WALL SECTION
SCALE 1/2"=1'-0"

2 WALL SECTION
SCALE 1/2"=1'-0"

1 WALL SECTION
SCALE 1/2"=1'-0"

APPROVAL STAMP
IDENTIFICATION STAMP
DIVISION OF THE STATE ARCHITECT
APPL NO. 107417
ACCEPTED FLS TH SS NL
DATE: 12/21/05

NO.	ISSUED FOR	DATE
1	DSA APPROVAL SET	12/08/05

LICENSED ARCHITECT ROY S. LAMKA NO. C7256 REN. 7-31-06 STATE OF CALIFORNIA
CERTIFIED SPECIFIER

K M D
KAPLAN McLAUGHLIN DIAZ
ARCHITECTURE PLANNING
222 VALLEJO SAN FRANCISCO, CA 94111
(415)398-5191 FAX (415)394-7158

SOLANO COMMUNITY COLLEGE

SCCD
VALLEJO CENTER
Contract # A003.6123.01.V1

PROJECT NO. 419-201
DATE 12-08-05

WALL SECTIONS
AS BUILTS

A6.22

PLOT DATE:

COPYRIGHT © 2004 BY KMD (KAPLAN McLAUGHLIN DIAZ). ALL RIGHTS RESERVED.

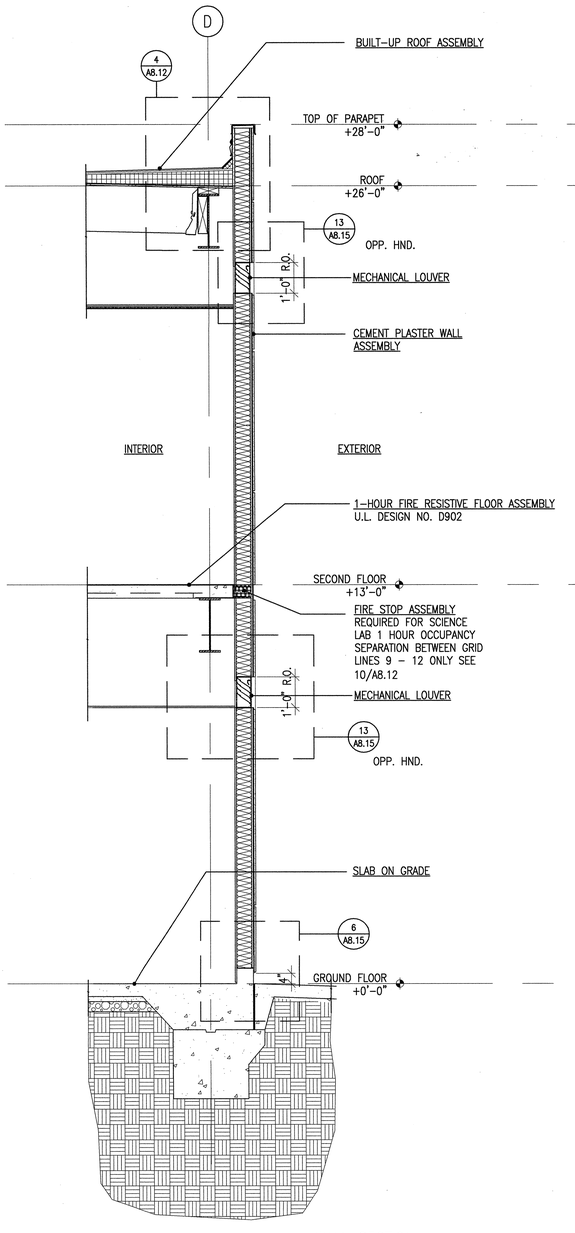

4 WALL SECTION
SCALE 1/2"=1'-0"

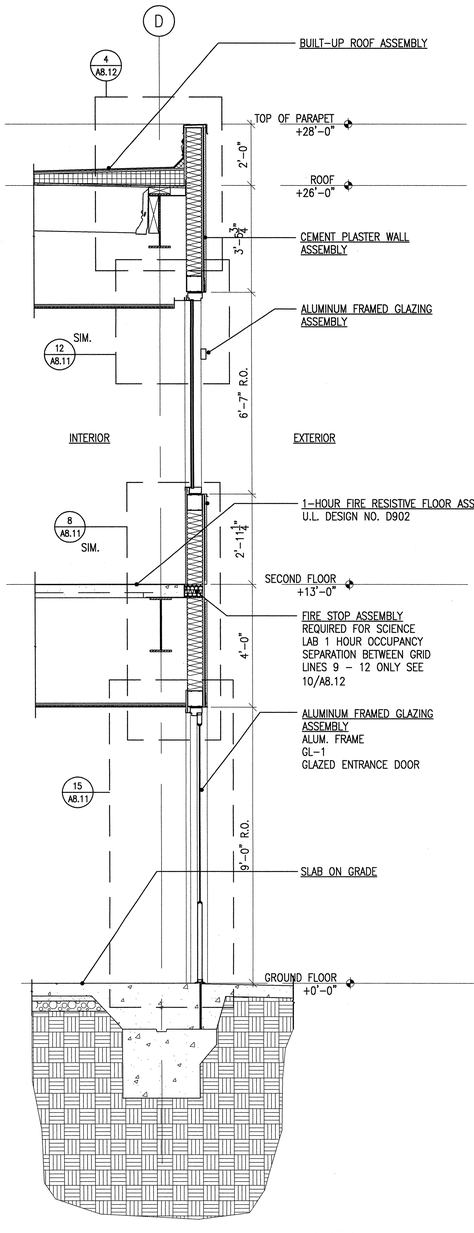

3 WALL SECTION
SCALE 1/2"=1'-0"

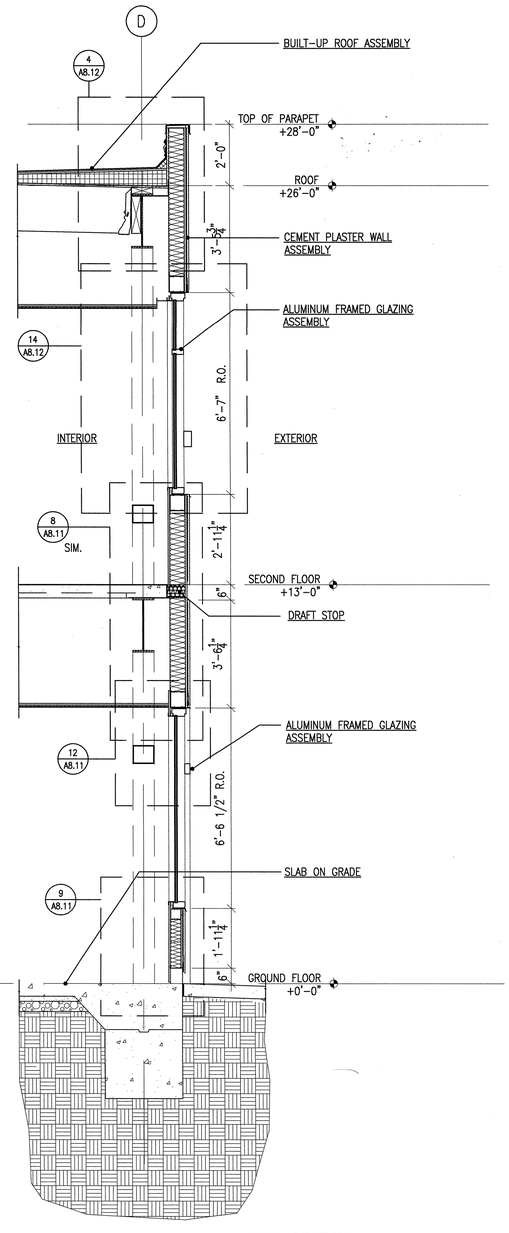

2 WALL SECTION
SCALE 1/2"=1'-0"

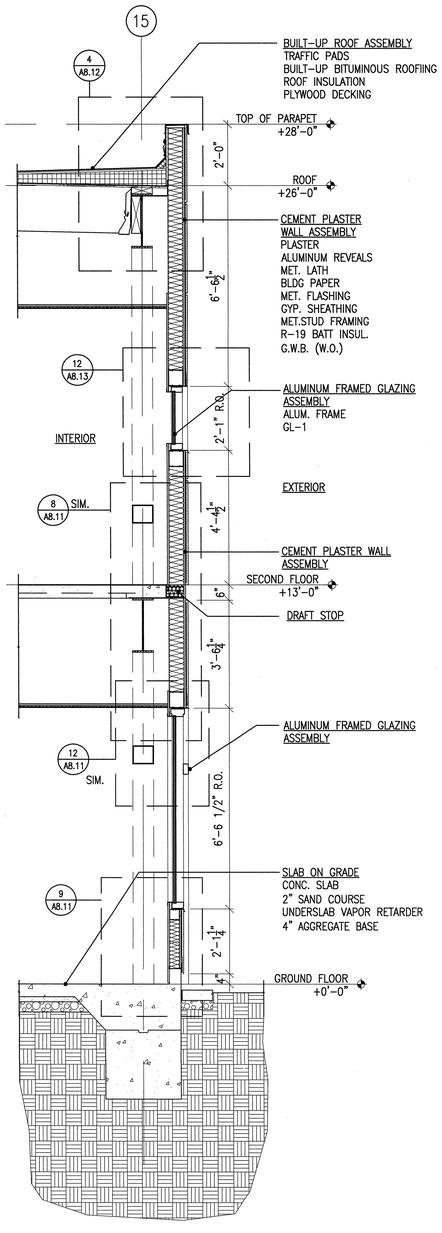

1 WALL SECTION
SCALE 1/2"=1'-0"

APPROVAL STAMP
IDENTIFICATION STAMP
DIVISION OF THE STATE ARCHITECT
APP. 02- 107417
ARCH FLS FE SS MC
DATE: 12/21/05

NO.	ISSUED FOR	DATE
1	DSA APPROVAL SET	12/08/05

LICENSED ARCHITECT ROY S. LAKE No. C7256 REN. 7-31-07 STATE OF CALIFORNIA
CERTIFIED BY

K M D
KAPLAN McLAUGHLIN DIAZ
ARCHITECTURE PLANNING
222 VALLEJO SAN FRANCISCO, CA 94111
(415) 398-5191 FAX (415) 394-7158

SOLANO COMMUNITY COLLEGE

SCCD
VALLEJO CENTER
Contract # A003.6123.01.V1

PROJECT NO. 419-201
DATE 12-08-05

WALL SECTIONS
AS BUILTS

A6.23

COPYRIGHT © 2004 BY KMD (KAPLAN McLAUGHLIN DIAZ). ALL RIGHTS RESERVED.

PATH: G:\000\000-000\ACAD\SHEETS\

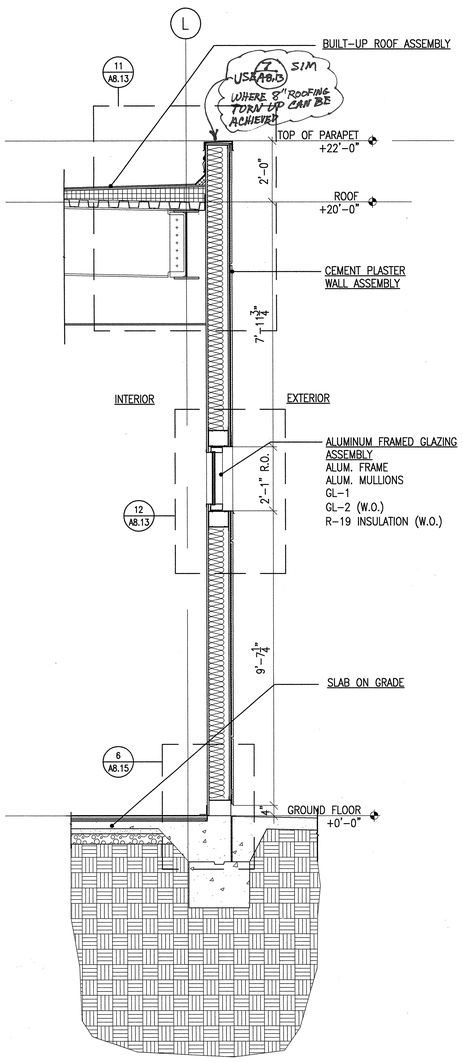

4 WALL SECTION
SCALE 1/2"=1'-0"

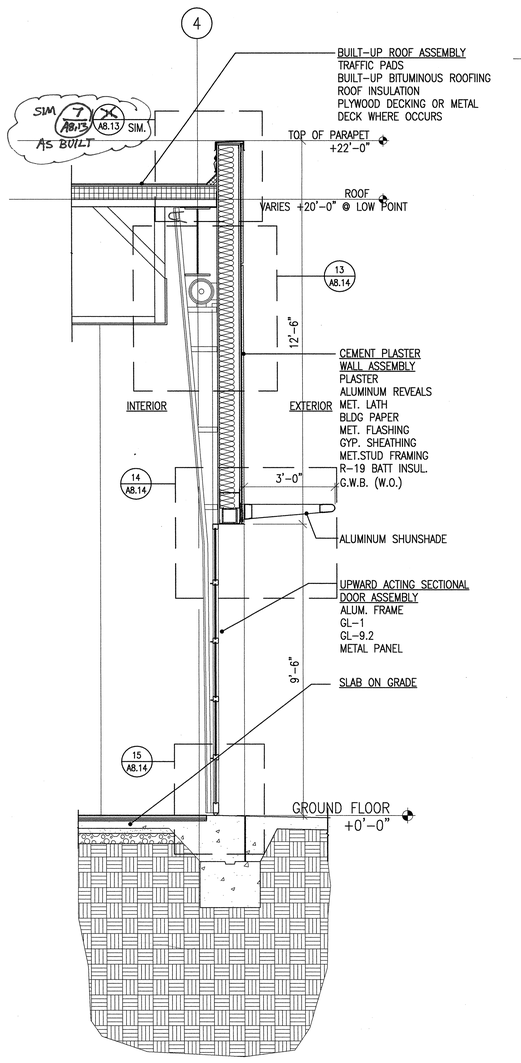

3 WALL SECTION
SCALE 1/2"=1'-0"

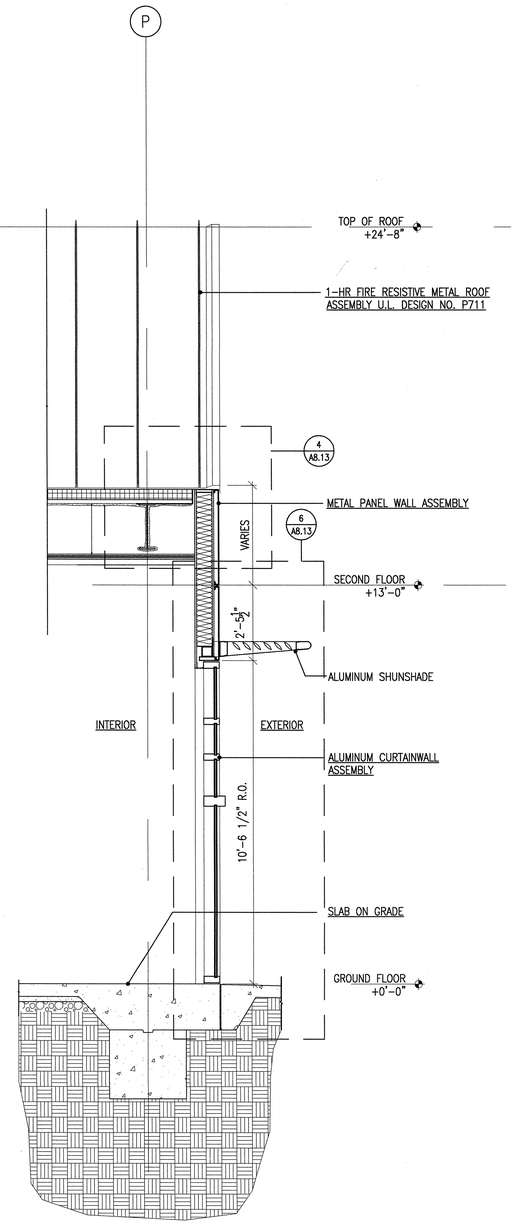

2 WALL SECTION
SCALE 1/2"=1'-0"

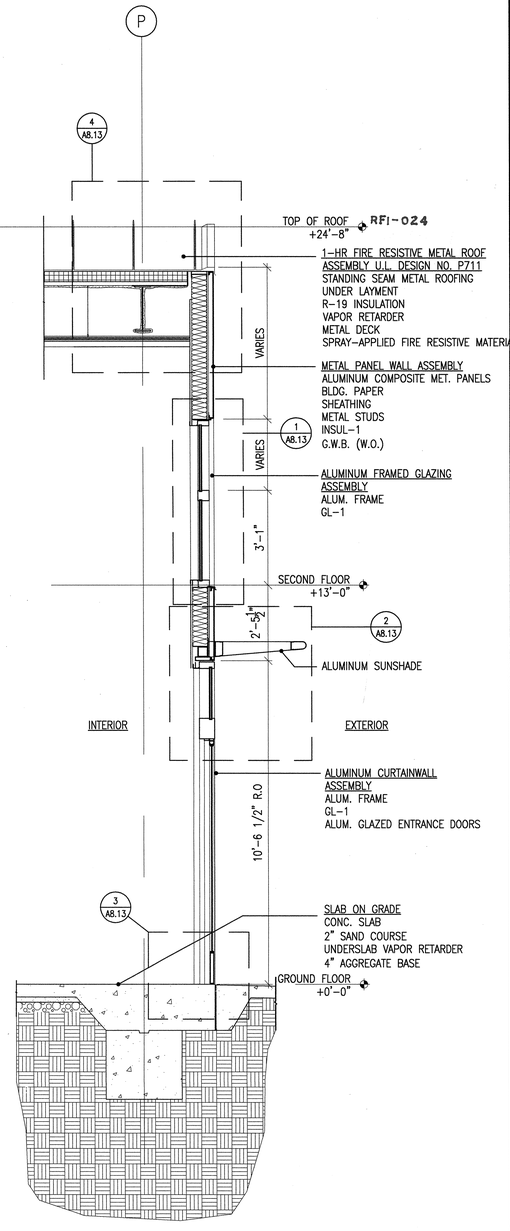

1 WALL SECTION
SCALE 1/2"=1'-0"

APPROVAL STAMP
IDENTIFICATION STAMP
DIVISION OF THE STATE ARCHITECT
APP'D 07- 107417
ACC FLS TH SS NL
DATE: 12/21/05

NO.	ISSUED FOR	DATE
1	DSA APPROVAL SET	12/08/05

LICENSED ARCHITECT
ROY S. LUNDA
No. C7256
REN. 7-31-06
STATE OF CALIFORNIA
CERTIFIED BY

K M D
KAPLAN McLAUGHLIN DIAZ
ARCHITECTURE PLANNING
222 VALLEJO SAN FRANCISCO, CA 94111
(415) 398-5191 FAX (415) 394-7158

SOLANO COMMUNITY COLLEGE

SCCD
VALLEJO CENTER
Contract # A003.6123.01.V1

PROJECT NO. 419-201
DATE 12-08-05

WALL SECTIONS
AS BUILTS

A6.24

PLOT DATE:

COPYRIGHT © 2004 BY KMD (KAPLAN McLAUGHLIN DIAZ). ALL RIGHTS RESERVED.

PATH: G:\000\000-000\ACAD\SHEETS\

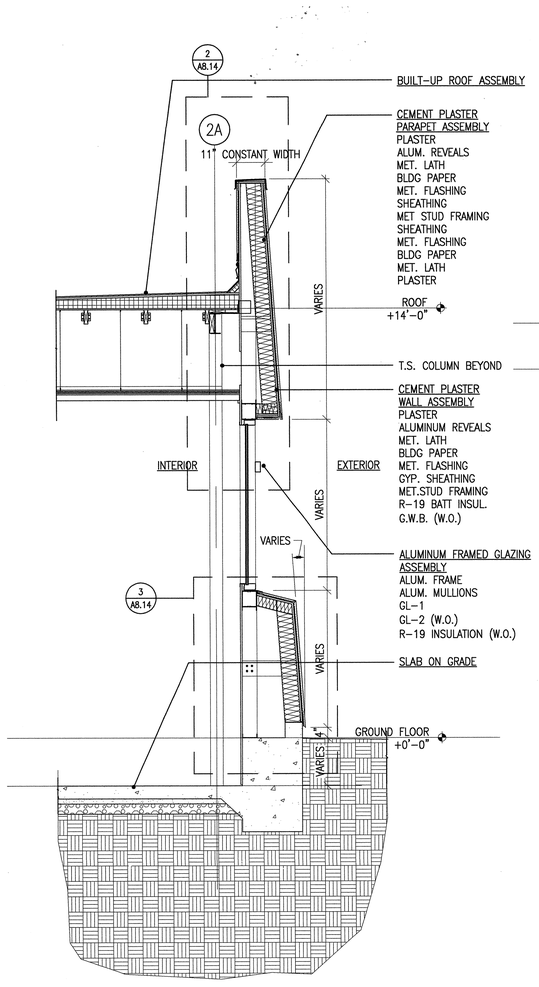

4 WALL SECTION
SCALE 1/2"=1'-0"

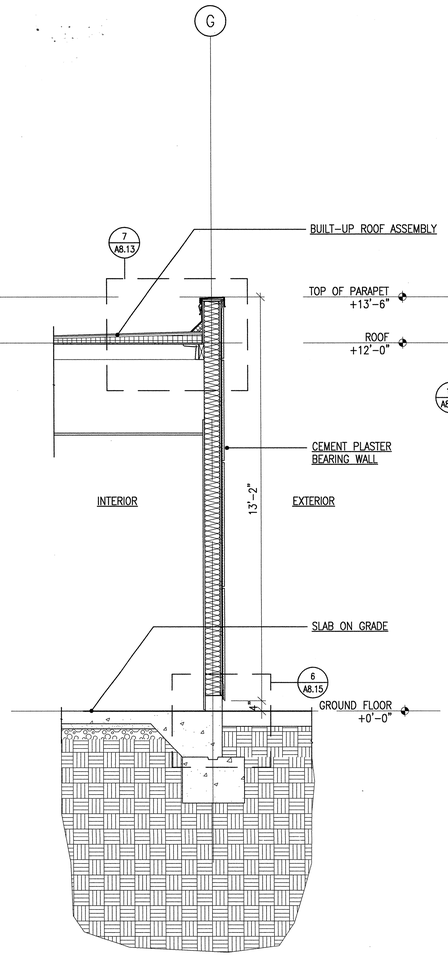

3 WALL SECTION
SCALE 1/2"=1'-0"

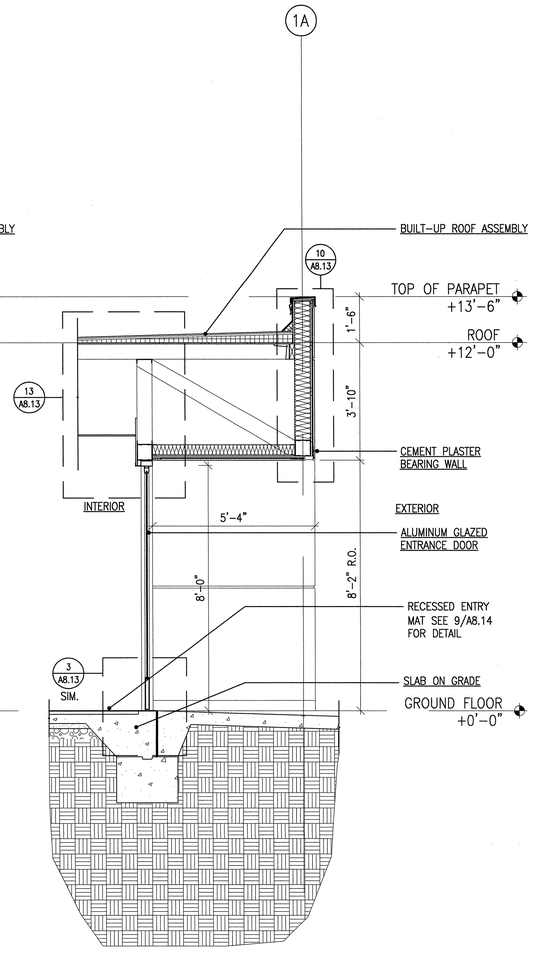

2 WALL SECTION
SCALE 1/2"=1'-0"

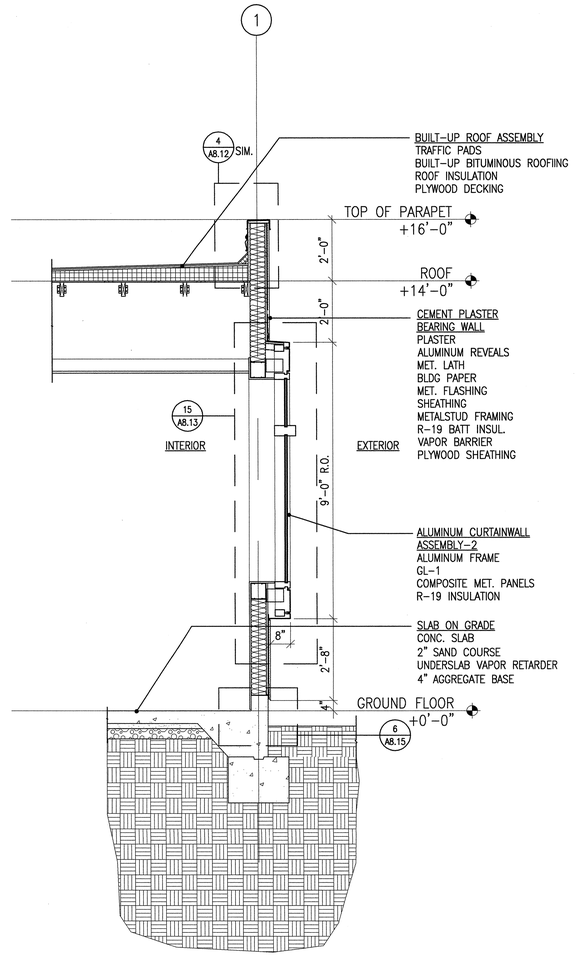

1 WALL SECTION
SCALE 1/2"=1'-0"

APPROVAL STAMP
IDENTIFICATION STAMP
DIVISION OF THE STATE ARCHITECT
APP'L 02- 107417
AC FLS SS
DATE: 12/21/05

NO.	ISSUED FOR	DATE
1	DSA APPROVAL SET	12/08/05

LICENSED ARCHITECT
ROY S. LANGE
NO. C7256
REN. 7-31-06
STATE OF CALIFORNIA
CERTIFIED BY

K M D
KAPLAN McLAUGHLIN DIAZ
ARCHITECTURE PLANNING
222 VALLEJO SAN FRANCISCO, CA 94111
(415)398-5191 FAX (415)394-7158

SOLANO COMMUNITY COLLEGE

SCCD
VALLEJO CENTER
Contract # A003.6123.01.V1

PROJECT NO. 419-201
DATE 12-08-05

WALL SECTIONS
AS BUILTS

A6.25

PLOT DATE:

COPYRIGHT © 2004 BY KMD (KAPLAN McLAUGHLIN DIAZ). ALL RIGHTS RESERVED.

PATH: G:\000\000-000\ACAD\SHEETS\

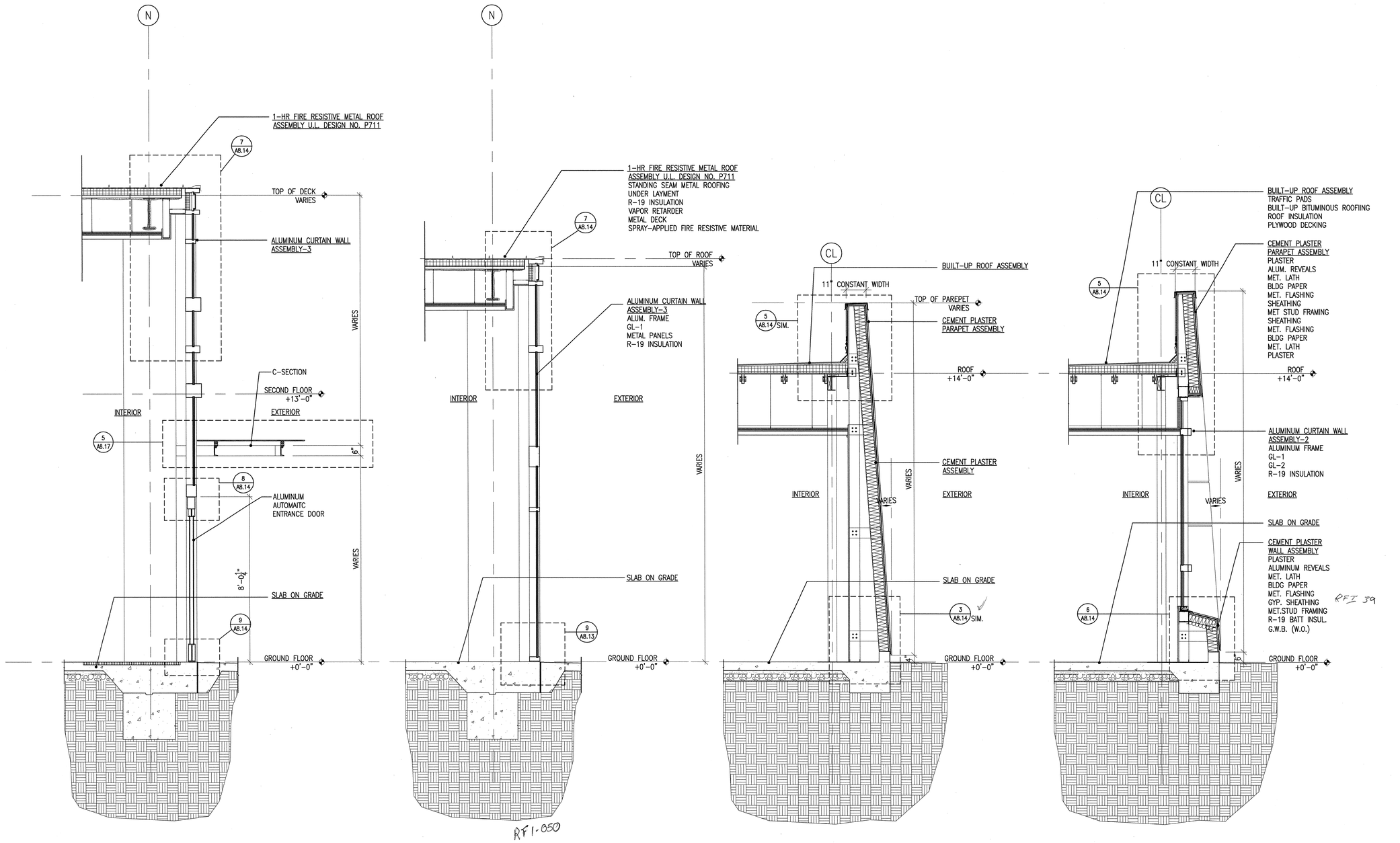

4 WALL SECTION
SCALE 1/2"=1'-0"

3 WALL SECTION
SCALE 1/2"=1'-0"

2 WALL SECTION
SCALE 1/2"=1'-0"

1 WALL SECTION
SCALE 1/2"=1'-0"

APPROVAL STAMP
IDENTIFICATION STAMP
DIVISION OF THE STATE ARCHITECT
APPL. NO. 107417
AC FLS TH SS
DATE: 12/21/05

NO.	ISSUED FOR	DATE
1	DSA APPROVAL SET	12/08/05

LICENSED ARCHITECT ROY S. LATKA NO. C7256 REN. 7-31-05 STATE OF CALIFORNIA
CERTIFIED BY

K M D
KAPLAN McLAUGHLIN DIAZ
ARCHITECTURE PLANNING
222 VALLEJO SAN FRANCISCO, CA 94111
(415) 398-5191 FAX (415) 394-7158

SOLANO COMMUNITY COLLEGE

SCCD
VALLEJO CENTER
Contract # A003.6123.01.V1

PROJECT NO. 419-201
DATE 12-08-05

WALL SECTIONS
AS BUILTS

A6.26

PLOT DATE:

COPYRIGHT © 2004 BY KMD (KAPLAN McLAUGHLIN DIAZ). ALL RIGHTS RESERVED.

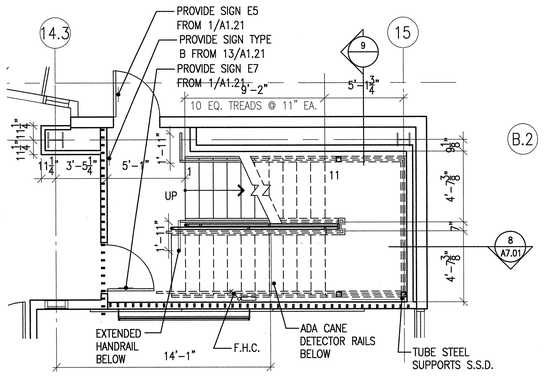

6 STAIR #2 FIRST FLOOR PLAN
SCALE 1/4"=1'-0"

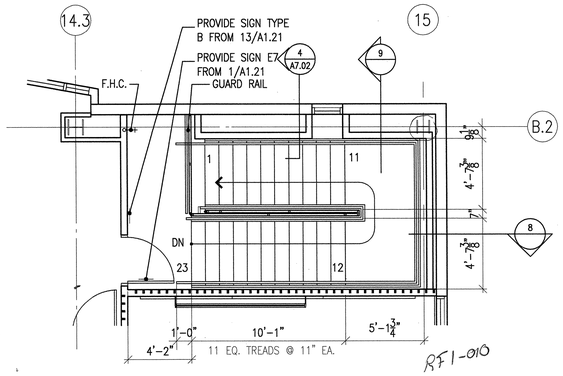

7 STAIR #2 SECOND FLOOR PLAN
SCALE 1/4"=1'-0"

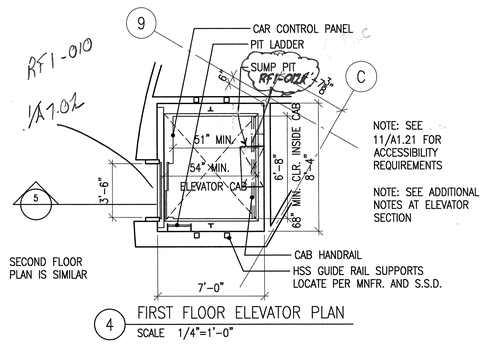

4 FIRST FLOOR ELEVATOR PLAN
SCALE 1/4"=1'-0"

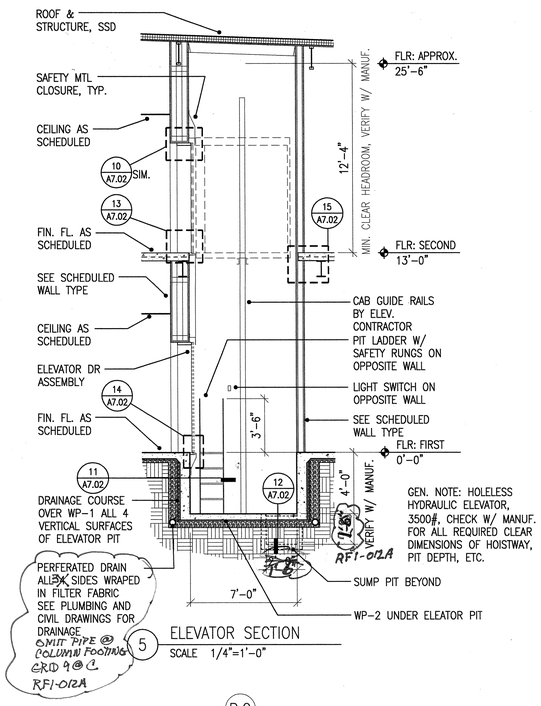

5 ELEVATOR SECTION
SCALE 1/4"=1'-0"

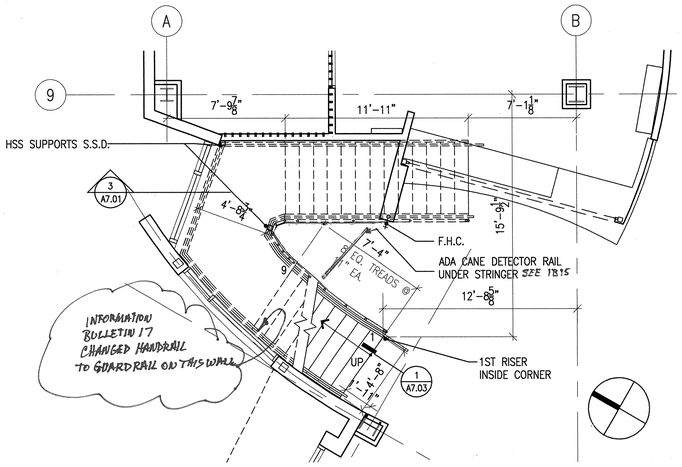

1 STAIR #1 FIRST FLOOR PLAN
SCALE 1/4"=1'-0"

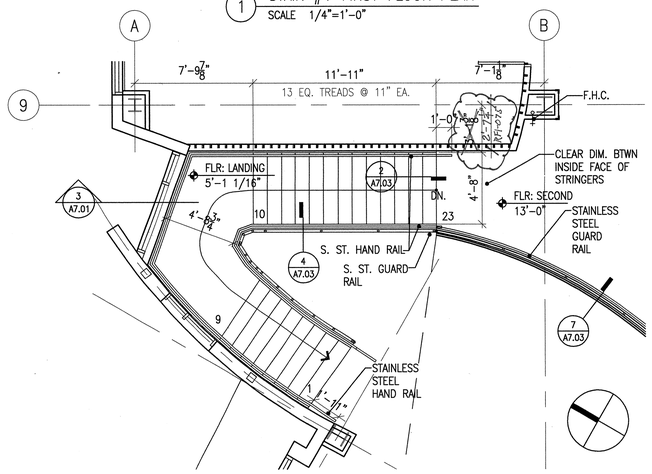

2 STAIR #1 SECOND FLOOR PLAN
SCALE 1/4"=1'-0"

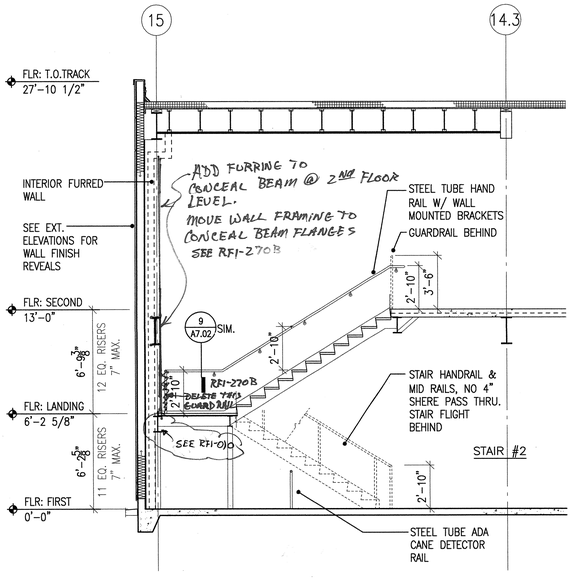

8 STAIR #2 SECTION
SCALE 1/4"=1'-0"

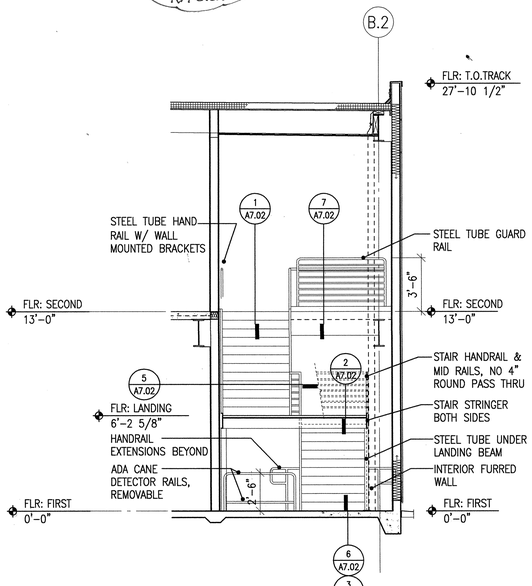

9 STAIR #2 SECTION
SCALE 1/4"=1'-0"

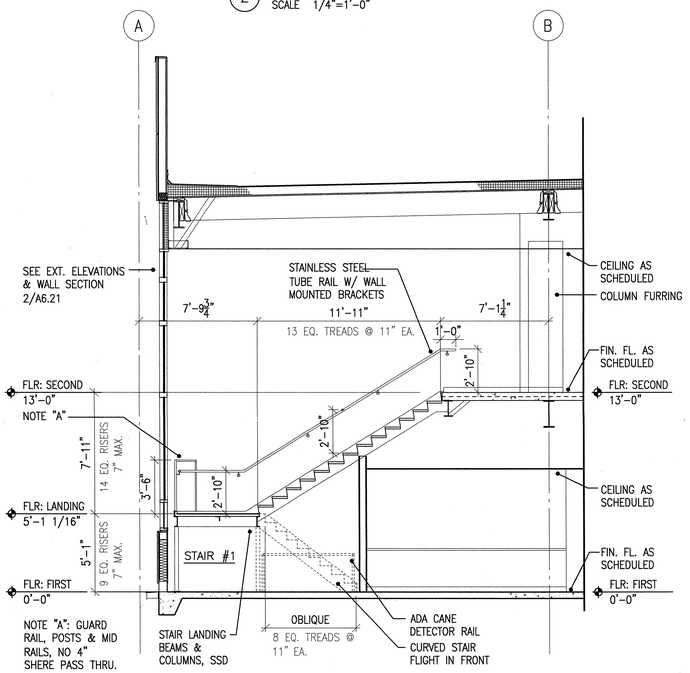

3 STAIR #1 SECTION
SCALE 1/4"=1'-0"

APPROVAL STAMP
IDENTIFICATION STAMP
DIVISION OF THE STATE ARCHITECT
APP. 02- 107417
AC FLS TH SS NL
DATE: 12/21/05

NO.	ISSUED FOR	DATE
1	DSA APPROVAL SET	12/08/05

LICENSED ARCHITECT ROY S. LOPEZ NO. C7256 REN. 7-31-07 STATE OF CALIFORNIA
CERTIFIED BY

K M D
KAPLAN McLAUGHLIN DIAZ
ARCHITECTURE PLANNING
222 VALLEJO SAN FRANCISCO, CA 94111
(415)398-5191 FAX (415)394-7158

SOLANO COMMUNITY COLLEGE

SCCD
VALLEJO CENTER
Contract # A003.6123.01.V1

PROJECT NO.	DATE
419-201	12-08-05

VERTICAL CIRCULATION
AS BUILTS

A7.01

COPYRIGHT © 2004 BY KMD (KAPLAN McLAUGHLIN DIAZ). ALL RIGHTS RESERVED.

PATH: G:\000\000-000\ACAD\SHEETS\

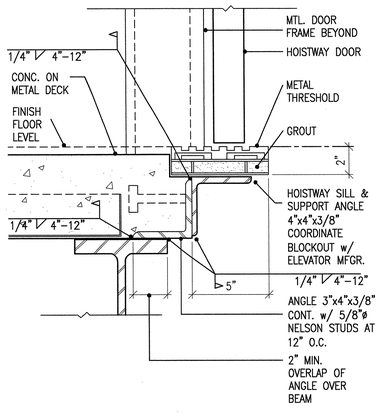

13 ELEV. DOOR SILL AT CONC. FILLED METAL DECK
SCALE 3"=1'-0" CODE
FILE 14280-03-GS SPEC

RFI#10

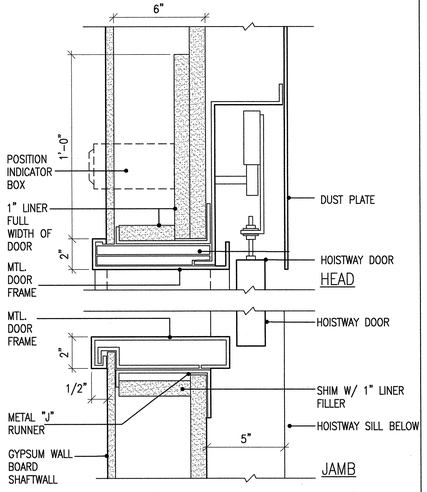

10 ELEVATOR DOOR HEAD AND JAMB
SCALE 3"=1'-0" CODE
FILE 14280-01-GS SPEC

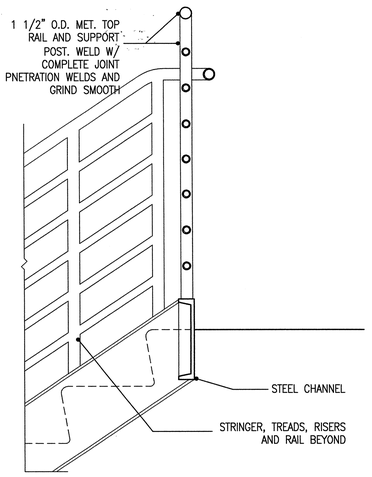

7 STAIR AT TOP LANDING
SCALE 1 1/2"=1'-0" CODE
FILE 05510-03-GS SPEC

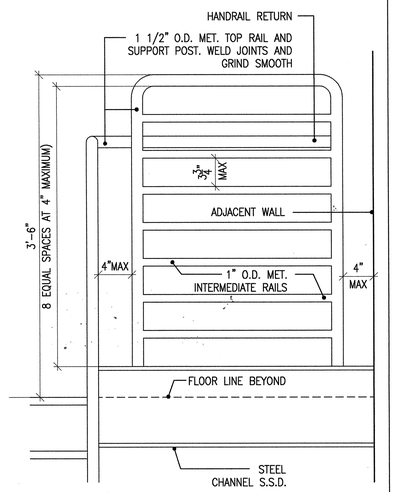

4 ELEVATION AT TOP LANDING
SCALE 1 1/2"=1'-0" CODE
FILE 05510-02-GS SPEC

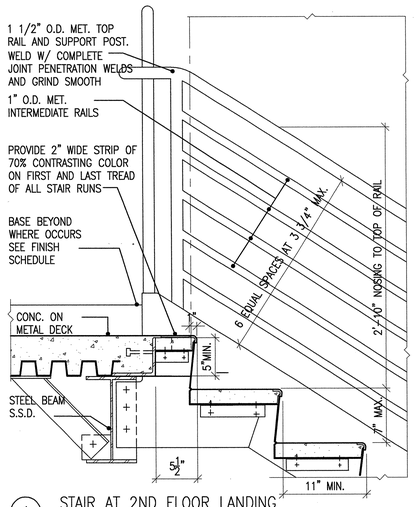

1 STAIR AT 2ND FLOOR LANDING
SCALE 1 1/2"=1'-0" CODE
FILE 05510-10-GS SPEC

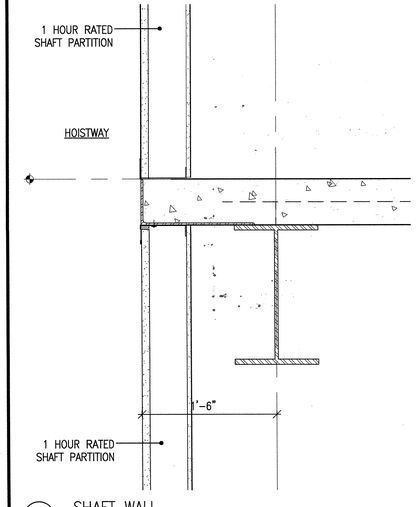

14 ELEVATOR DOOR SILL AND CONCRETE SLAB
SCALE 3"=1'-0" CODE
FILE 14280-04-GS SPEC

11 LADDER AT ELEV. PIT
SCALE 1 1/2"=1'-0" CODE
FILE 14280-05-GS SPEC

8 RAIL TO STRINGER
SCALE 3"=1'-0" CODE
FILE 05520-05-GS SPEC

5 SECTION AT LANDING
SCALE 1 1/2"=1'-0" CODE
FILE 05510-01-GS SPEC

2 STAIR AT INTERMEDIATE LANDING
SCALE 1 1/2"=1'-0" CODE
FILE 05510-11-GS SPEC

15 SHAFT WALL
SCALE 1 1/2"=1'-0" CODE
FILE 09250-07-GR SPEC

12 SUMP GRATING AT SLAB
SCALE 3"=1'-0" CODE
FILE 05530-02-GS SPEC

9 WALL MOUNTED HANDRAIL
SCALE VARIES CODE
FILE 05520-03-GS SPEC

6 STRINGER ANCHOR AT FLOOR
SCALE 3"=1'-0" CODE
FILE 05510-06-GS SPEC

3 STRINGER AT FOOT OF STAIR
SCALE 1 1/2"=1'-0" CODE
FILE 05510-04-GS SPEC

APPROVAL STAMP
IDENTIFICATION STAMP
DIVISION OF THE STATE ARCHITECT
APP'D BY: 107417
AC FLS SS
DATE: 12/21/05

NO.	ISSUED FOR	DATE
1	DSA APPROVAL SET	12/08/05

LICENSED ARCHITECT
ROY S. LAYNE
No. C7256
REN. 7-31-07
STATE OF CALIFORNIA
CERTIFIED

K M D
KAPLAN McLAUGHLIN DIAZ
ARCHITECTURE PLANNING
222 VALLEJO SAN FRANCISCO, CA 94111
(415) 398-5191 FAX (415) 394-7158

SOLANO COMMUNITY COLLEGE

SCCD
VALLEJO CENTER
Contract # A003.6123.01.V1

PROJECT NO.	DATE
419-201	12-08-05

VERTICAL CIRCULATION DETAILS
AS BUILTS

A7.02

PLOT DATE:

COPYRIGHT © 2004 BY KMD (KAPLAN McLAUGHLIN DIAZ). ALL RIGHTS RESERVED.

PATH: G:\000\000-000\ACAD\SHEETS\

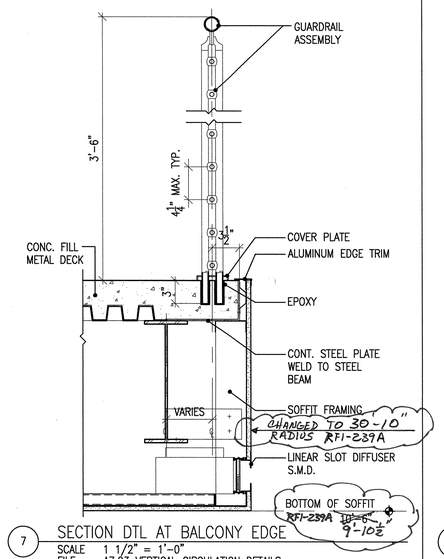

7 SECTION DTL AT BALCONY EDGE
SCALE 1 1/2" = 1'-0"
FILE A7.03 VERTICAL CIRCULATION DETAILS 12/19/05

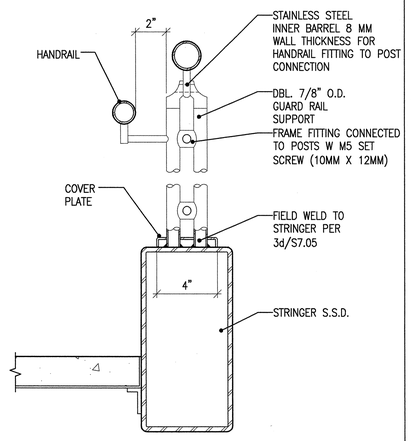

4 ORNAMENTAL GUARDRAIL
SCALE 3" = 1'-0"
FILE A7.03 VERTICAL CIRCULATION DETAILS 12/19/05

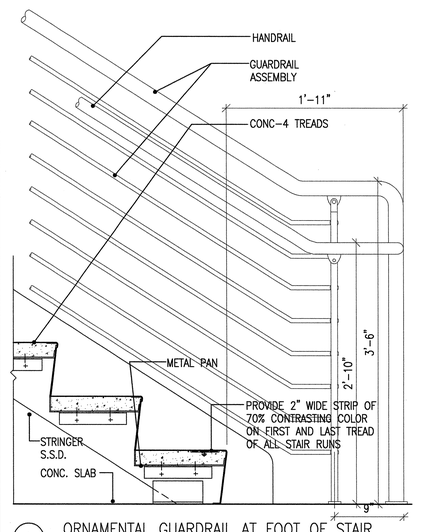

1 ORNAMENTAL GUARDRAIL AT FOOT OF STAIR
SCALE 1 1/2" =1'-0"
FILE A7.03 VERTICAL CIRCULATION DETAILS 12/19/05

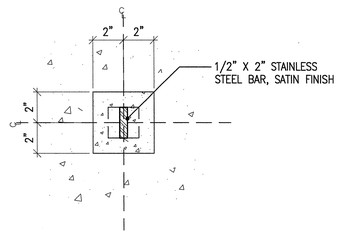

11 RAMP HANDRAIL PLAN DETAIL
SCALE 3"=1'-0"
FILE A7.03 VERTICAL CIRCULATION DETAILS 12/19/05

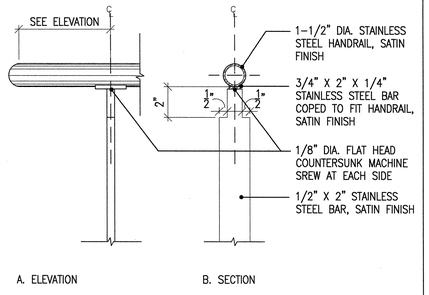

8 DETAIL AT RAMP HANDRAIL
SCALE 3"=1'-0"
FILE A7.03 VERTICAL CIRCULATION DETAILS 12/19/05

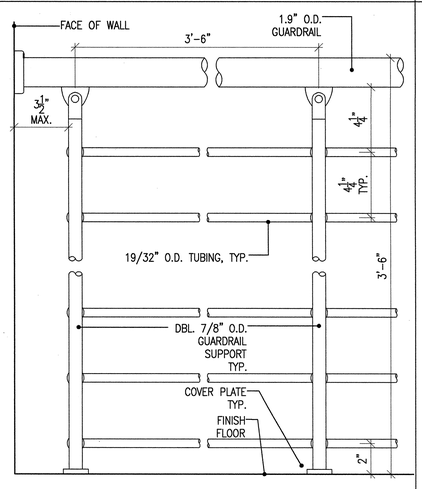

5 ORNAMENTAL GUARDRAIL ELEVATION
SCALE 3"=1'-0"
FILE A7.03 VERTICAL CIRCULATION DETAILS 12/19/05

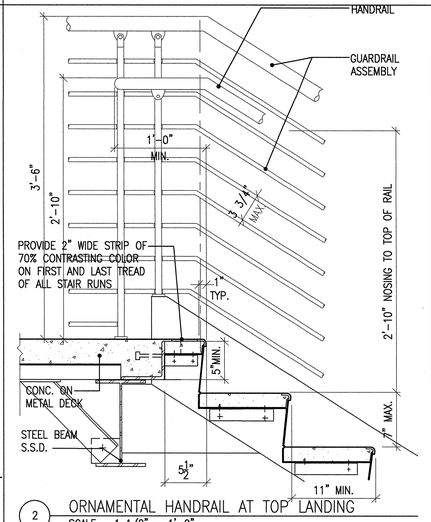

2 ORNAMENTAL HANDRAIL AT TOP LANDING
SCALE 1 1/2" = 1'-0"
FILE A7.03 VERTICAL CIRCULATION DETAILS 12/19/05

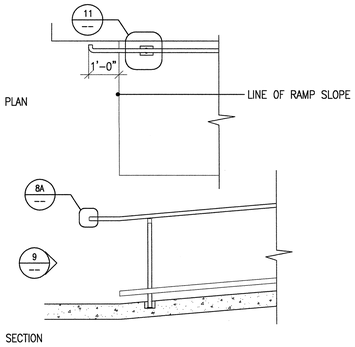

12 RAMP HANDRAIL PLAN/SECTION
SCALE 1/2"=1'-0"
FILE A7.03 VERTICAL CIRCULATION DETAILS 12/19/05

SEE RFI-077 FOR DISTANCE FROM WALL @ LECTURE HALL

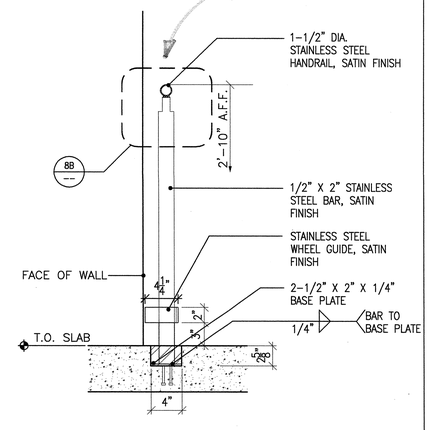

9 DETAIL AT RAMP HANDRAIL
SCALE 1 1/2"=1'-0"
FILE A7.03 VERTICAL CIRCULATION DETAILS 12/19/05

Copy sent by e-mail to: East Bay, Long Elect., Ace Iron, Performance Contracting, & Security Metal on 8-9-06

Ralph Larsen & Son, Inc.
General Contractor License No. 185041
300 8th Avenue
San Mateo, CA 94401-4229
Phone: (650) 579-0239
Fax: (650) 579-0240

Request for Information 077

Detailed, RFIs Grouped by RFI Number

Vallejo Center for Solano Community College Dist
Project # 3904
Tel: (707) 648-4327 Fax: (707) 553-9728
Ralph Larsen & Son, Inc.
Hortigase Business Park
545 Columbus Parkway
Vallejo, CA 94591

RFI #: 077
Date Created: 8/4/2006
Answer Company | Answered By | Author Company: Ralph Larsen & Son, Inc. 300 8th Avenue San Mateo, CA 94401 | Authored By: Ivory Jones
Co-Respondent | Author RFI Number
Subject: Need handrail clearance dimensions Room B106 | Discipline | Category
Cc: Company Name | Contact Name | Copies | Notes
Question | Date Required: 8/9/2006
Review the attached sketches. We are having a difficult time determining the location for the floor anchors at the handrail in Room B106. There details help show where we are having the dimensional issues. Ivory has drawn some section views to help see the possible differences. At the handrail along the radius you need to think about the drapery length at the window and how close it can be to the handrail. Also, the wall is not a consistent radius. How close does the door frame to accept the plywood, two layers on inside and one layer galley side. Total wall assembly is 5 1/2", the dimension consist of 6 inch studs + 1/2" + 2 layers gyp sup side + 1 layer gyp galley side + 2" acoustical panel.
1. How far away from acoustical panel do you want the center line of handrail along South wall of Room B106?
2. How much of a return do you want on the wheel guard along the radius wall side of room B106 for drapery clearance?
3. Will you add dimensions for clearances in section views provided by Ivory?
Suggestion
Answer | Date Answered:
1. The centerline of the handrail is 2'4" from acoustical panel
2. Wheel guard should return to face of wall per A/A2.03
3. SEE SKETCHES.
NOTE: (1) LAYER OF GWB MAY BE ELIMINATED A @L 'F' WALL.
Printing Manager | Printed on: 8/4/2006 | RALPH

PD/KMD 08/07/06 419-201 2/1

SEE RFI-077 FOR DISTANCE FROM WALL @ LECTURE HALL

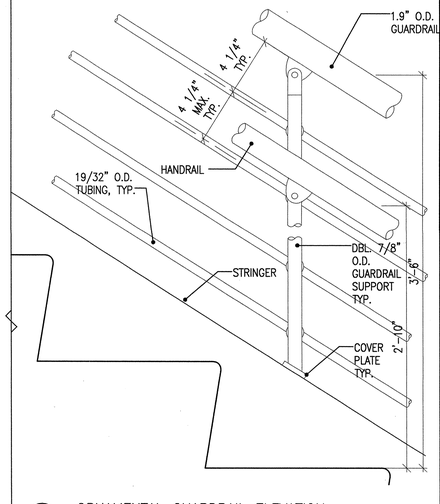

3 ORNAMENTAL GUARDRAIL ELEVATION
SCALE 1 1/2" = 1'-0"
FILE A7.03 VERTICAL CIRCULATION DETAILS 12/19/05

APPROVAL STAMP
IDENTIFICATION STAMP
DIVISION OF THE STATE ARCHITECT
APPL. NO. 107417
AC FLS SS
DATE: 12/21/05

NO.	ISSUED FOR	DATE
1	DSA APPROVAL SET	12/08/05

LICENSED ARCHITECT ROY S. LOPEZ NO. C7256 EXP. 7-31-07 STATE OF CALIFORNIA
CERTIFIED BY

K M D
KAPLAN McLAUGHLIN DIAZ
ARCHITECTURE PLANNING
222 VALLEJO SAN FRANCISCO, CA 94111
(415) 398-5191 FAX (415) 394-7158

AS BUILTS

SOLANO COMMUNITY COLLEGE

SCCD
VALLEJO CENTER
Contract # A003.6123.01.V1

PROJECT NO. 419-201
DATE 12-08-05

VERTICAL CIRCULATION DETAILS

A7.03

PLOT DATE:

COPYRIGHT © 2004 BY KMD (KAPLAN McLAUGHLIN DIAZ). ALL RIGHTS RESERVED.

PATH: G:\000\000-000\ACAD\SHEETS\

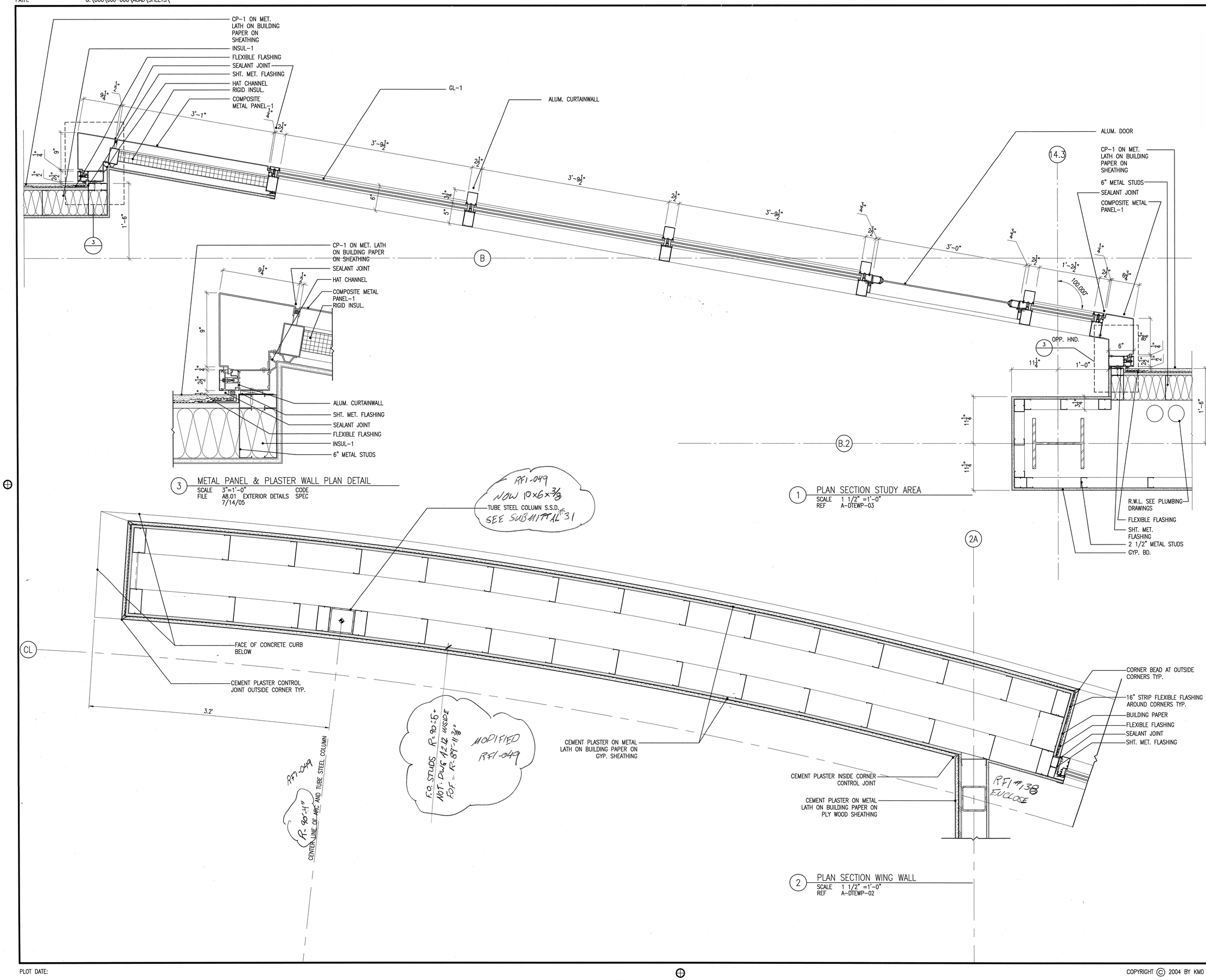

3 METAL PANEL & PLASTER WALL PLAN DETAIL
SCALE 3"=1'-0" CODE
FILE A8.01 EXTERIOR DETAILS SPEC
7/14/05

1 PLAN SECTION STUDY AREA
SCALE 1 1/2" =1'-0"
REF A-DTEWP-03

2 PLAN SECTION WING WALL
SCALE 1 1/2" =1'-0"
REF A-DTEWP-02

APPROVAL STAMP
IDENTIFICATION STAMP
DIVISION OF THE STATE ARCHITECT
APPL 02- 107417
AC HLD FLS TH SS PVL
DATE: 12/21/05

NO.	ISSUED FOR	DATE
1	DSA APPROVAL SET	12/08/05

LICENSED ARCHITECT ROY S. LATKA NO. C7256 REN. 7-31-05 STATE OF CALIFORNIA

CERTIFIED BY

K M D
KAPLAN McLAUGHLIN DIAZ
ARCHITECTURE PLANNING
222 VALLEJO SAN FRANCISCO, CA 94111
(415) 398-5191 FAX (415) 394-7158

SOLANO COMMUNITY COLLEGE

SCCD
VALLEJO CENTER
Contract # A003.6123.01.V1

PROJECT NO. 419-201
DATE 12-08-05

EXTERIOR DETAILS PLAN
AS BUILTS

A8.01

PLOT DATE:

COPYRIGHT © 2004 BY KMD (KAPLAN McLAUGHLIN DIAZ). ALL RIGHTS RESERVED.

PATH: G:\000\000-000\ACAD\SHEETS\

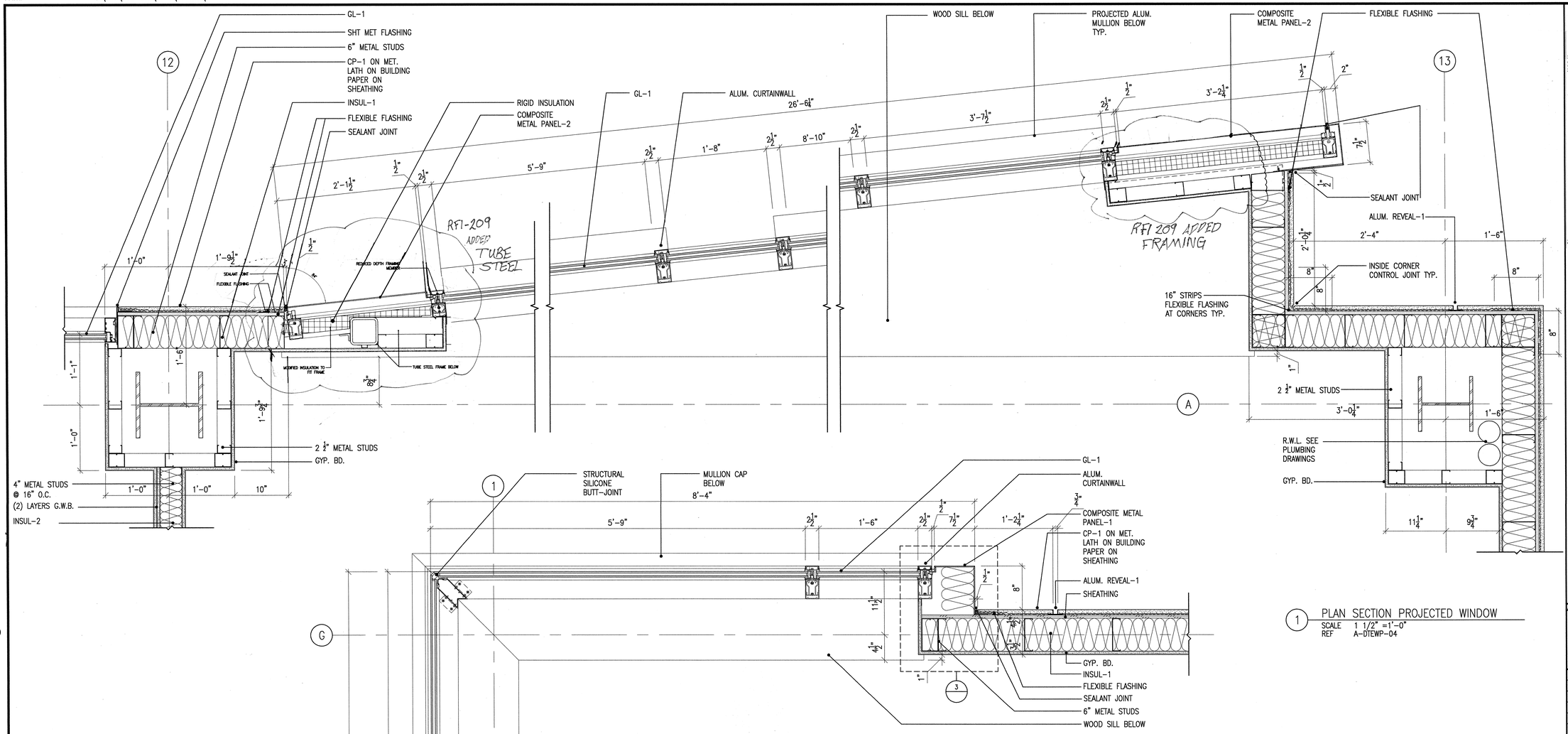

1 PLAN SECTION PROJECTED WINDOW
SCALE 1 1/2" =1'-0"
REF A-DTEWP-04

2 PLAN SECTION BAY WINDOW
SCALE 1 1/2" =1'-0"
REF A-DTEWP-05

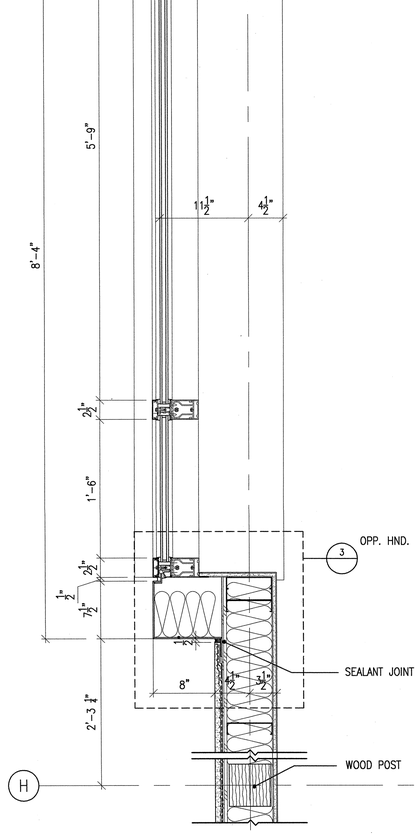

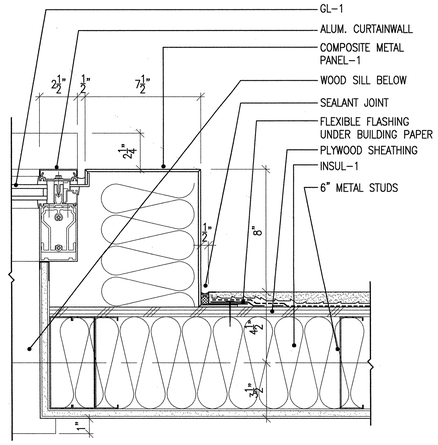

3 METAL PANEL & PLASTER WALL PLAN DETAIL
SCALE 3"=1'-0"
FILE A8.02 EXTERIOR DETAILS PLAN 11/8/05

Ralph Larsen & Son, Inc.
General Contractor License No. 485041
500 8th Avenue
San Rafael, CA 94923-4021
Phone: (800)570-6200
Fax: (800)570-6241

Request for Information 209A

Detailed, RFIs Grouped by RFI Number

Vallejo Center for Solano Community College Site
Northgate Business Park
Fairgrounds Driveway
Vallejo, CA 94591

Project # 2004
Tel: (707) 649-8307 Fax: (707) 553-6728

Ralph Larsen & Son, Inc

RFI # 2004
Answer Company

Date Created: 1/23/2007
Answered By
Author Company
Ralph Larsen & Son, Inc.
500 8th Avenue
San Rafael, CA 94901
Author:
Authored By
Jay Tucker

Co-Respondent
Author RFI Number

Subject
Proposed change to framing at end wing wall

Discipline

Category

Cc: Company Name Contact Name Copies Notes

Date Required: 1/23/2007

Question
In our RFI-209 we indicated our concern for the projected window attachment at the East end to the wing wall shown in detail 5/A8.02. The following is a portion of our RFI-209:
The only window framing attached available at the East end is at the horizontal window framing to the (East end) metal wing wall.
1. Do we need to weld the two st/d studs together as these studs will be able to resist the exterior wind loads when we attach the horizontal window framing to the metal stud framing shown?
The reply to RFI-209 QUESTION 1 is as follows:
1. Contractor to propose framing option(s) based on the field condition for DSA/SS review and approval.
Contractor proposed framing option is to add a 2nd stud consisting of DASSE DESIGN. The double end studs shown in the end of the wing wall are one 16 gauge 6 inch x 1 5/8" flange and one 16 gauge 6 inch track. The track has the metal stud on one flange to achieve the angle needed to match the window angle. We propose to remove the exterior felt and paper, install the second stud, then re-install the felt and paper. The second stud will be attached to the wing wall studs with a minimum of 10 ssg at 9" O.C. The screw attachment beyond flange web must be #10 framing screw at 6 inches.
Or
Our understanding is that this fastening of the double studs shown will achieve enough strength to resist the exterior wind loads in the projected window framing at the East end.
is our understanding correct?

Suggestion

Answer 1. YES.
6"x18GA STUD + 6"x18GA TRACK COMBINED IS SUFFICIENT TO SUPPORT WIND LOADED WINDOW.
Chick Kong Chiu
DASSE (1-26-07)

Date Answered

Printed on: 1/23/2007 RALPH Page 1

APPROVAL STAMP
IDENTIFICATION STAMP
DIVISION OF THE STATE ARCHITECT
APP: 02- 107417
AC: JHL SS JNL
DATE: 12/21/05

NO.	ISSUED FOR	DATE
1	DSA APPROVAL SET	12/08/05

LICENSED ARCHITECT ROY S. LAKE NO. C7256 REN 7-31-07 STATE OF CALIFORNIA
CERTIFIED BY

K M D
KAPLAN McLAUGHLIN DIAZ
ARCHITECTURE PLANNING
222 VALLEJO SAN FRANCISCO, CA 94111
(415) 398-5191 FAX (415) 394-7158

SOLANO COMMUNITY COLLEGE

SCCD
VALLEJO CENTER
Contract # A003.6123.01.V1

PROJECT NO. 419-201
DATE 12-08-05

EXTERIOR DETAILS PLAN
AS BUILTS

A8.02

PLOT DATE:

COPYRIGHT © 2004 BY KMD (KAPLAN McLAUGHLIN DIAZ). ALL RIGHTS RESERVED.

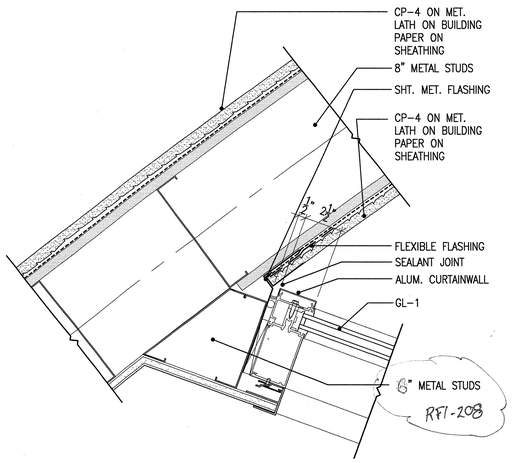

3 CURTAINWALL & PLASTER WALL PLAN SECTION DETAIL

SCALE 3"=1'-0" CODE
FILE A-DTEW-46 SPEC
12/7/05

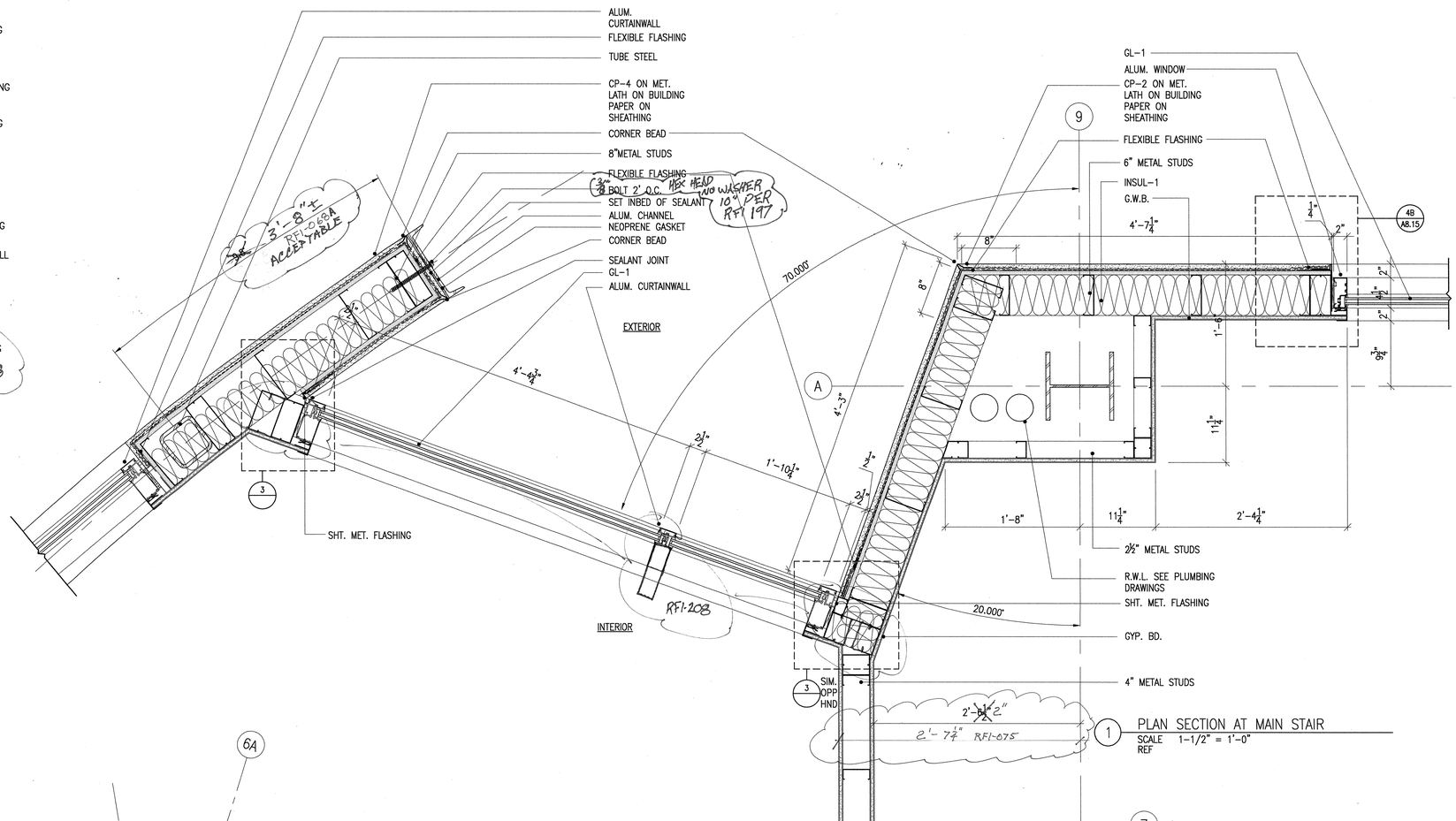

1 PLAN SECTION AT MAIN STAIR

SCALE 1-1/2" = 1'-0"
REF

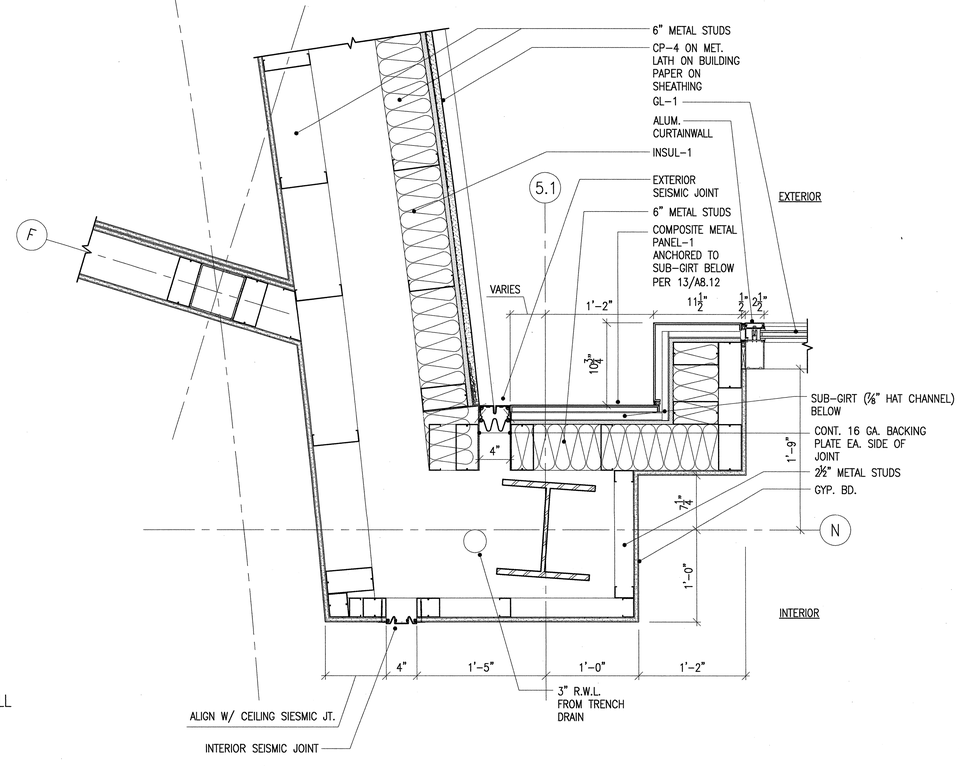

4 PLAN SECTION OF SEISMIC JOINT

SCALE 1 1/2" = 1'-0" CODE
FILE A8.03 EXTERIOR DETAILS PLAN SPEC
12/7/05

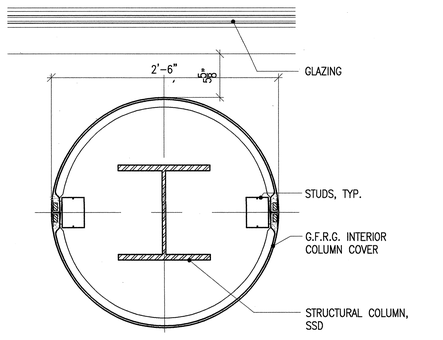

5 PLAN SECTION OF COLUMN AT LOBBY CURTAINWALL

SCALE 1 1/2"=1'-0" CODE
FILE SPEC

7

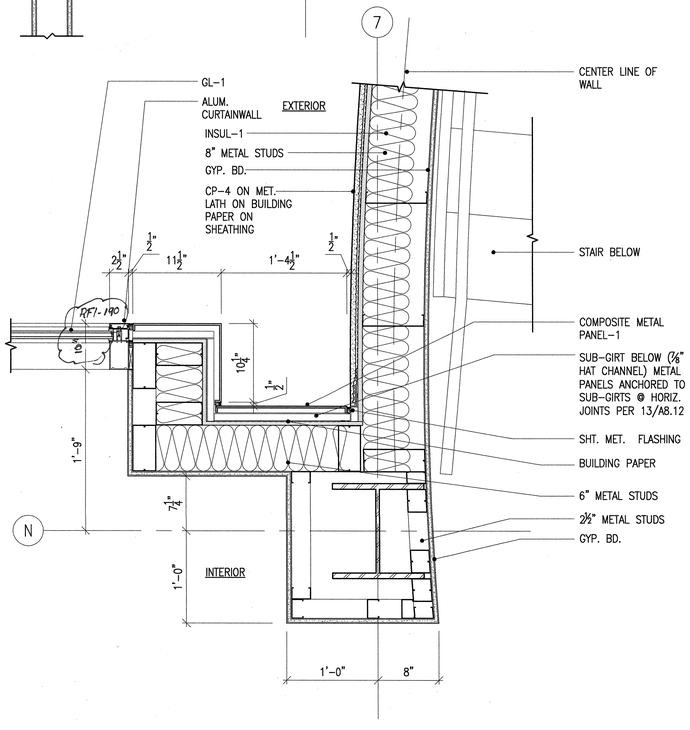

2 PLAN SECTION AT LOBBY

SCALE 1-1/2" = 1'-0"
REF A-DTEWP-08

APPROVAL STAMP
IDENTIFICATION STAMP
DIVISION OF THE STATE ARCHITECT
APPL. 02- 107417
AC FLS TH SS NC
DATE: 12/21/05

NO.	ISSUED FOR	DATE
1	DSA APPROVAL SET	12/08/05

LICENSED ARCHITECT ROY S. LAUKA NO. C7256 REN. 7-31-06 STATE OF CALIFORNIA
CERTIFIED ARCHITECT

K M D
KAPLAN McLAUGHLIN DIAZ
ARCHITECTURE PLANNING
222 VALLEJO SAN FRANCISCO, CA 94111
(415) 398-5191 FAX (415) 394-7158

SOLANO COMMUNITY COLLEGE

SCCD
VALLEJO CENTER
Contract # A003.6123.01.V1

PROJECT NO. 419-201
DATE 12-08-05

EXTERIOR DETAILS PLAN
AS BUILTS

A8.03

COPYRIGHT © 2004 BY KMD (KAPLAN McLAUGHLIN DIAZ). ALL RIGHTS RESERVED.

PATH: G:\000\000-000\ACAD\SHEETS\

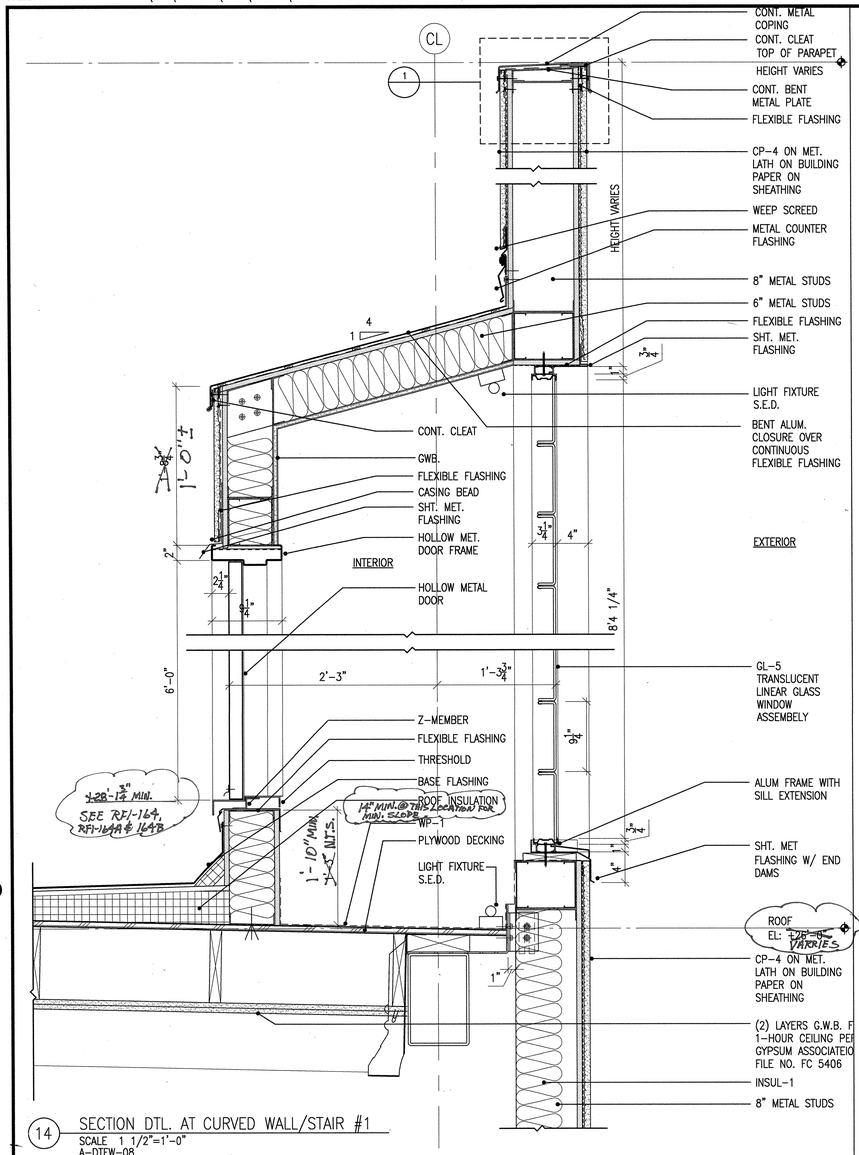

14 SECTION DTL. AT CURVED WALL/STAIR #1
SCALE 1 1/2"=1'-0"
A-DTEW-08

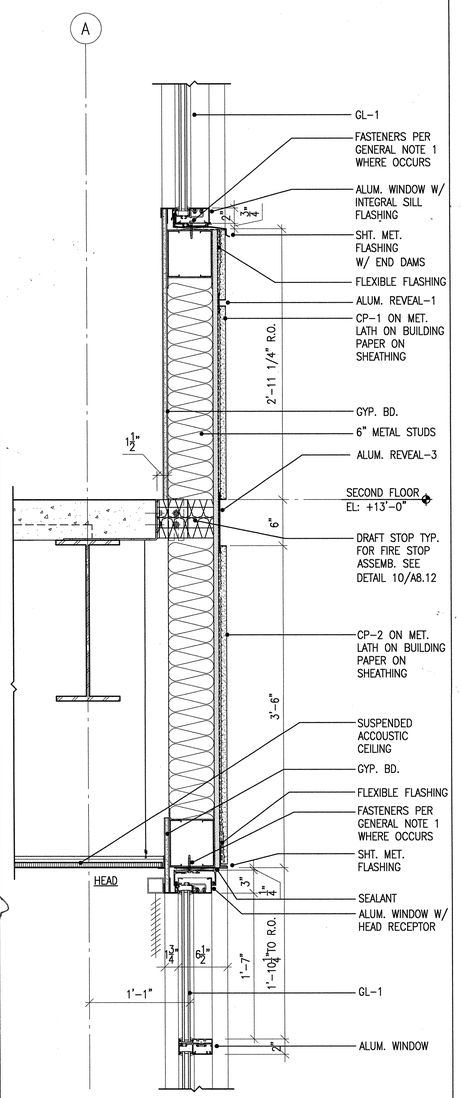

8 SECTION DETAIL AT EXTERIOR WALL
SCALE 1 1/2"=1'-0"
A-DTEW-03

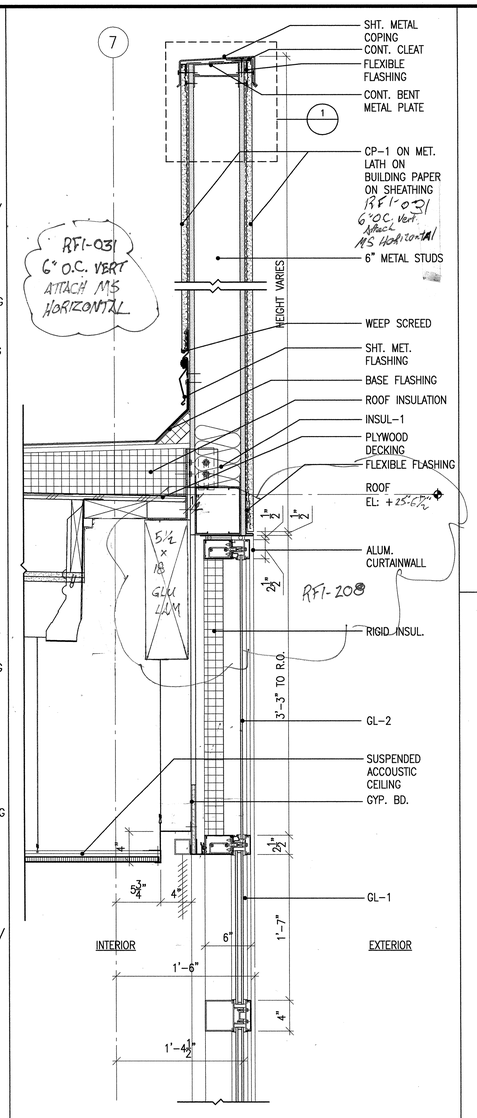

5 DETAIL AT CURTAINWALL/CEMENT PLASTER PARAPET
SCALE 1 1/2"=1'-0"
A-DTEW-06

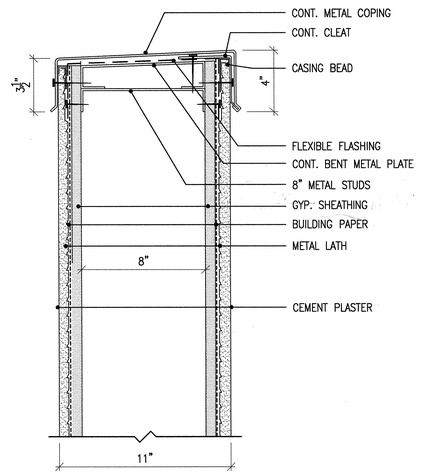

1 CEMENT PLASTER @ PARAPET (TYPICAL)
SCALE 3"=1'-0"
FILE A-DTEW-47 12/7/05
CODE SPEC

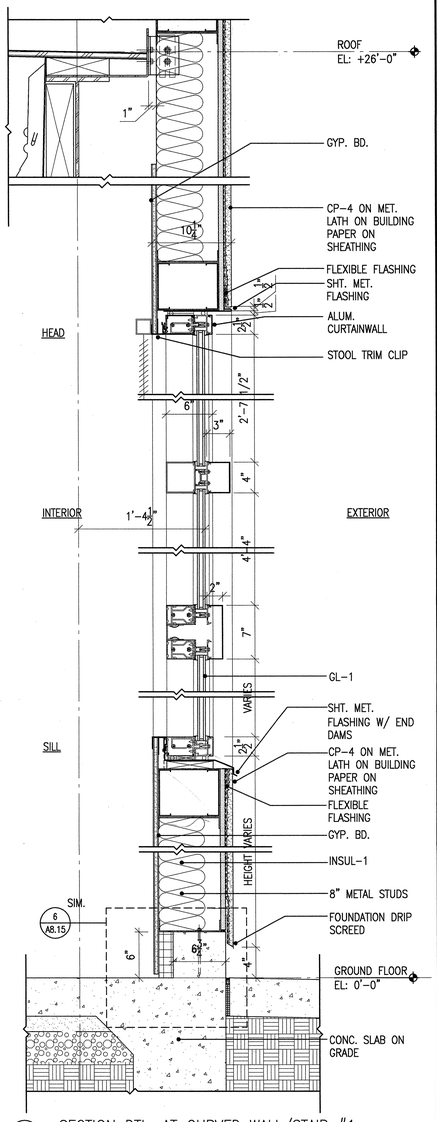

3 SECTION DTL. AT CURVED WALL/STAIR #1
SCALE 1 1/2"=1'-0"
A-DTEW-07

GENERAL NOTES

1. FASTENERS FOR STOREFRONT & WINDOW SYSTEMS (LESS THAN 10' IN HEIGHT) SHALL BE AS FOLLOWS:

INTO MIN 16 GA. METAL STUDS: (1) #10-16 SELF-DRILLING SCREW EACH CLEAR SIDE OF VERTICAL MULLION AND 12" O.C.

INTO CONCRETE SLAB ON GRADE OPTION A: (1) ⅜"ø EXPANSION ANCHOR WITH 2½" EMBED EACH CLEAR SIDE OF VERTICAL MULLION AND 2'-0" O.C., 2½" MIN. EDGE DISTANCE.

INTO CONCRETE SLAB ON GRADE OPTION B: (1) ½"ø CONCRETE SCREW ANCHOR WITH 1¾" EMBED EACH CLEAR SIDE OF VERTICAL MULLION AND 2'-0" O.C., 1½" MIN. EDGE DISTANCE.

APPROVAL STAMP
IDENTIFICATION STAMP
DIVISION OF THE STATE ARCHITECT
APP. 02- 107417
ACC FLS SS
DATE: 12/21/05

NO.	ISSUED FOR	DATE
1	DSA APPROVAL SET	12/08/05

LICENSED ARCHITECT
ROY S. LAKE
NO. C7256
REN. 7-31-07
STATE OF CALIFORNIA
CERTIFIED BY

K M D
KAPLAN McLAUGHLIN DIAZ
ARCHITECTURE PLANNING
222 VALLEJO SAN FRANCISCO, CA 94111
(415) 398-5191 FAX (415) 394-7158

SOLANO COMMUNITY COLLEGE

SCCD
VALLEJO CENTER
Contract # A003.6123.01.V1

PROJECT NO.	DATE
419-201	12-08-05

EXTERIOR DETAILS SECTION
AS BUILTS

A8.11

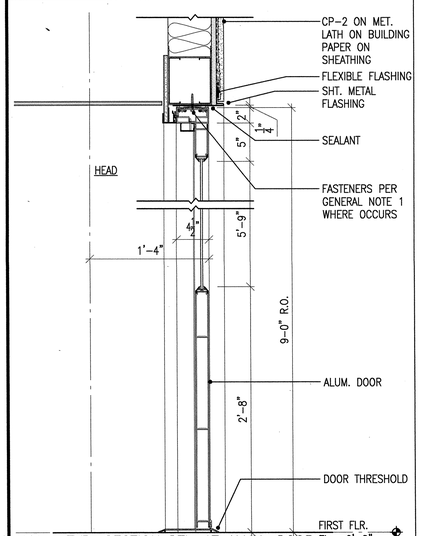

15 TYP. SECTION DTL. AT ALUM. DOOR
SCALE 1 1/2"=1'-0"
A-DTEW-29

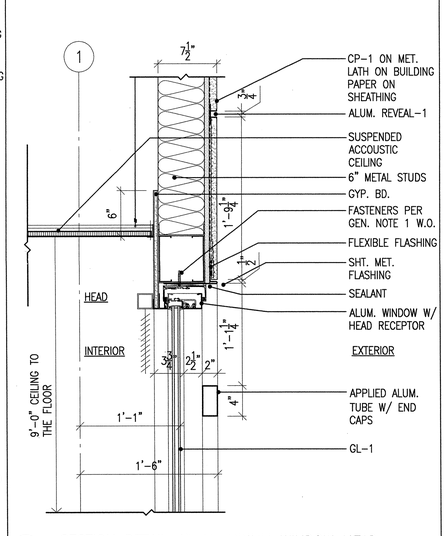

12 SECTION DETAIL AT ALUMINUM WINDOW HEAD
SCALE 1 1/2"=1'-0"
A-DTEW-05

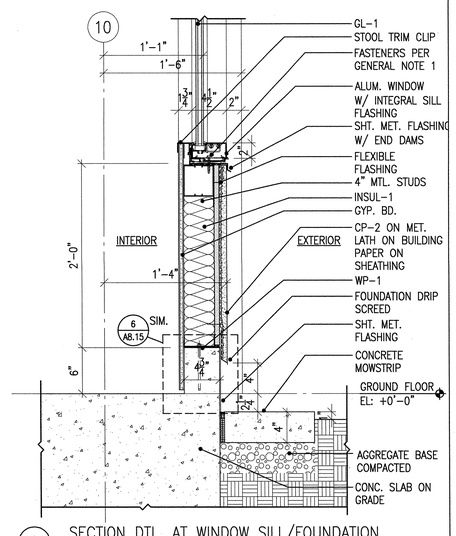

9 SECTION DTL. AT WINDOW SILL/FOUNDATION
SCALE 1 1/2"=1'-0"
A-DTEW-02

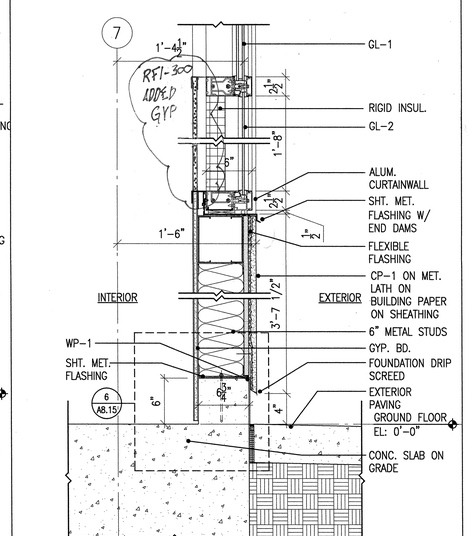

6 SECTION DTL. AT WALL/STAIR #2
SCALE 1 1/2"=1'-0"
A-DTEW-04

ATTACH LATH RFI-031 (CBC 2506.3)

COPYRIGHT © 2004 BY KMD (KAPLAN McLAUGHLIN DIAZ). ALL RIGHTS RESERVED.

PLOT DATE:

PATH: G:\000\000-000\ACAD\SHEETS\

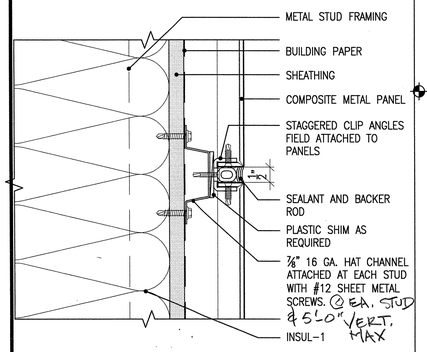

13 TYP. HORIZ. COMPOSITE MET. WALL PANEL JOINT
SCALE 6" = 1'-0" CODE
FILE A8.12 EXTERIOR DETAILS SECTIONS SPEC
12/7/05

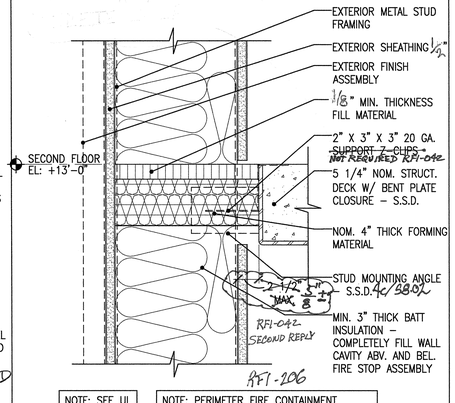

NOTE: SEE UL REPORT FOR COMPLETE ASSEMBLY

NOTE: PERIMETER FIRE CONTAINMENT SYSTEM ONLY REQUIRED FOR 1–HOUR HORIZ. OCC. SEPARATION AT SCIENCE LABS BETWEEN GRID LINES 9–12 ALONG GRID D

10 1–HR PERIMETER FIRE CONTAINMENT SYSTEM
SCALE 3"=1'-0" CODE
FILE A-DTEW-56 SPEC UL REF # : CW-S-1002
12/7/05

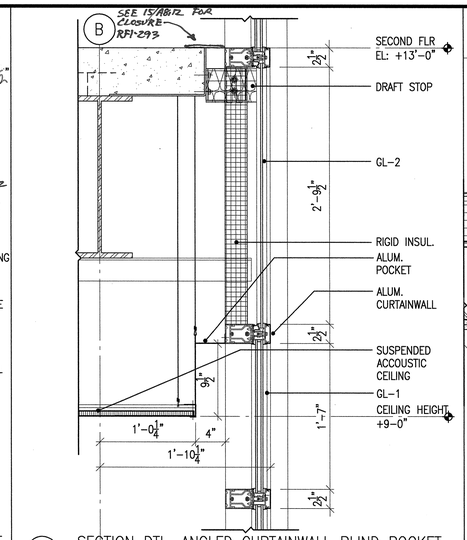

7 SECTION DTL. ANGLED CURTAINWALL BLIND POCKET
SCALE 1 1/2"=1'-0"

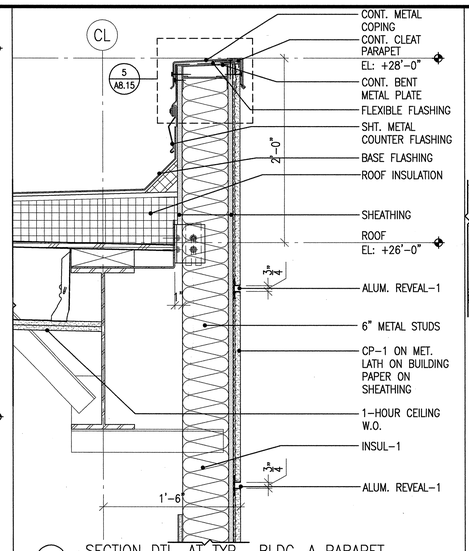

4 SECTION DTL. AT TYP. BLDG. A PARAPET
SCALE 1 1/2"=1'-0"
A-DTEW-22

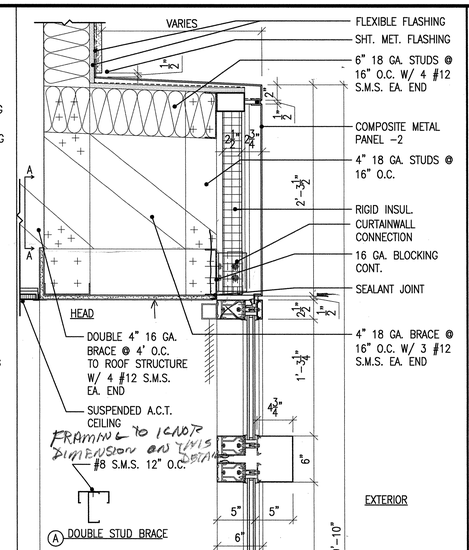

2 SECTION DTL. AT BAY WINDOW –BLDG. A
SCALE 1 1/2"=1'-0"
A-DTEW-09

GENERAL NOTES

1. FASTENERS FOR STOREFRONT & WINDOW SYSTEMS (LESS THAN 10' IN HEIGHT) SHALL BE AS FOLLOWS:

INTO MIN 16 GA. METAL STUDS: (1) #10–16 SELF–DRILLING SCREW EACH CLEAR SIDE OF VERTICAL MULLION AND 12" O.C.

INTO CONCRETE SLAB ON GRADE OPTION A: (1) ⅜"ø EXPANSION ANCHOR WITH 2½" EMBED EACH CLEAR SIDE OF VERTICAL MULLION AND 2'–0" O.C., 2½" MIN. EDGE DISTANCE.

INTO CONCRETE SLAB ON GRADE OPTION B: (1) ¼"ø CONCRETE SCREW ANCHOR WITH 1¾" EMBED EACH CLEAR SIDE OF VERTICAL MULLION AND 2'–0" O.C., 1½" MIN. EDGE DISTANCE.

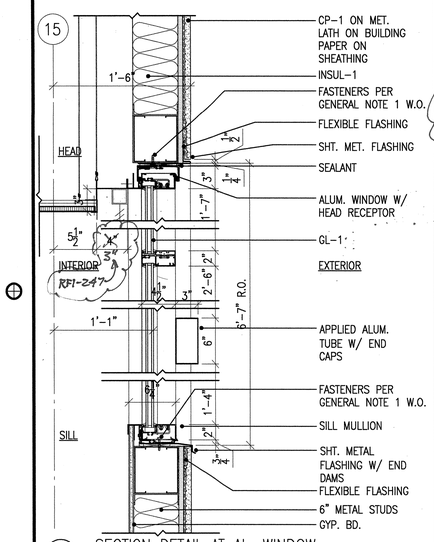

14 SECTION DETAIL AT AL. WINDOW
SCALE 1 1/2"=1'-0"
A-DTEW-14

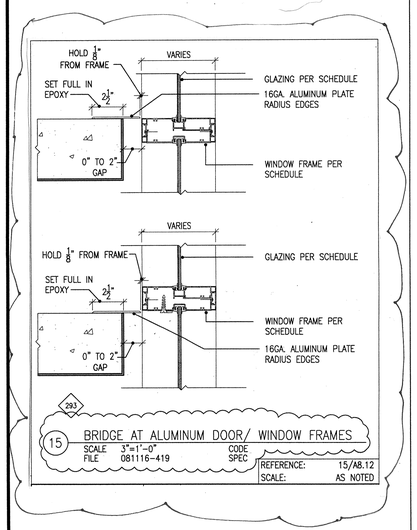

15 BRIDGE AT ALUMINUM DOOR/ WINDOW FRAMES
SCALE 3"=1'-0" CODE
FILE 081116-419 SPEC
REFERENCE: 15/A8.12
SCALE: AS NOTED

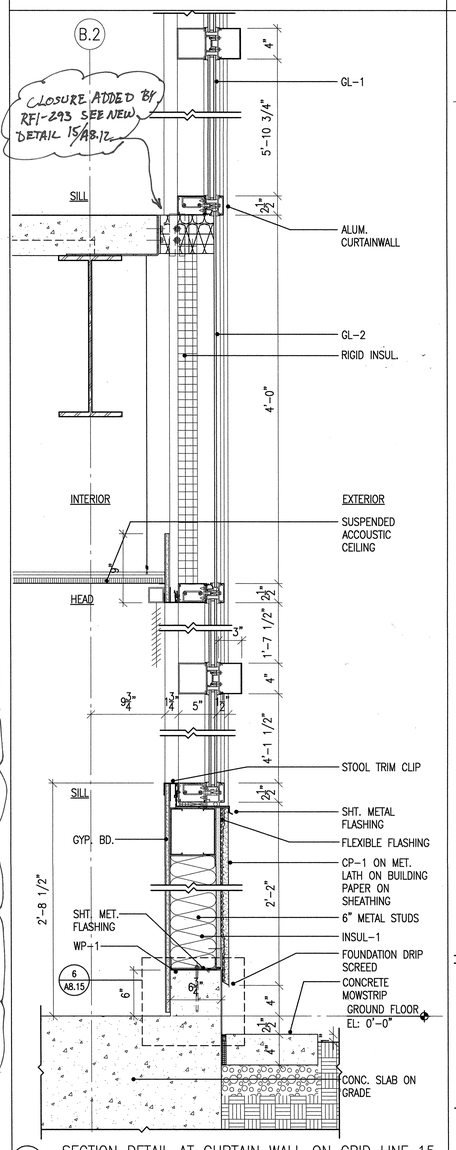

12 SECTION DETAIL AT CURTAIN WALL ON GRID LINE 15
SCALE 1 1/2"=1'-0"
A-DTEW-13

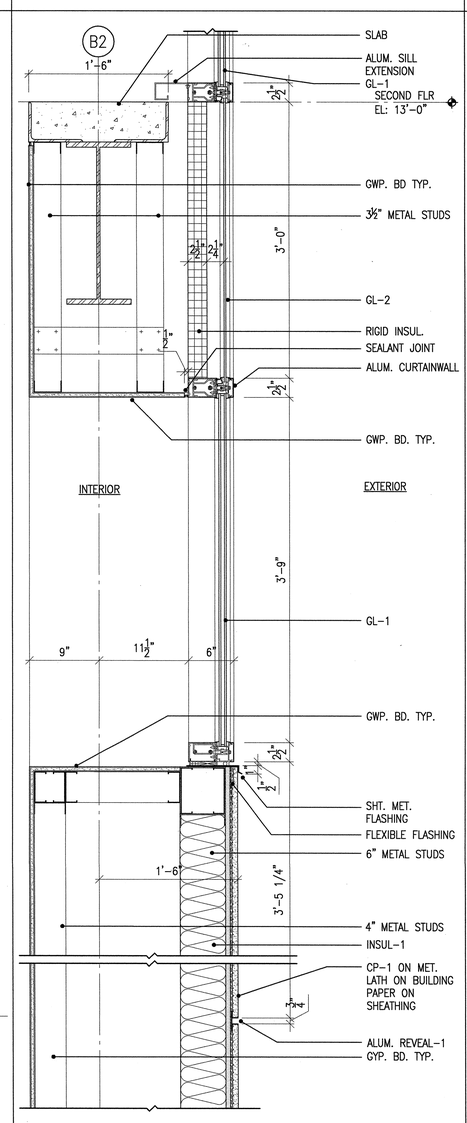

8 SECTION DTL. EAST STAIR –BLDG.–A
SCALE 1 1/2"=1'-0"
A-DTEW-12

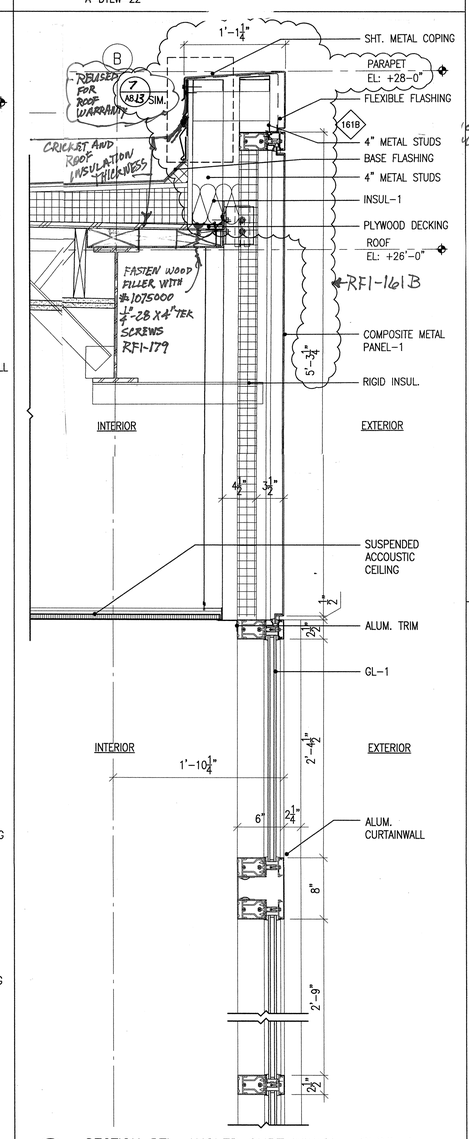

6 SECTION DTL. ANGLED CURTAINWALL –BLDG–A
SCALE 1 1/2"=1'-0"
A-DTEW-11

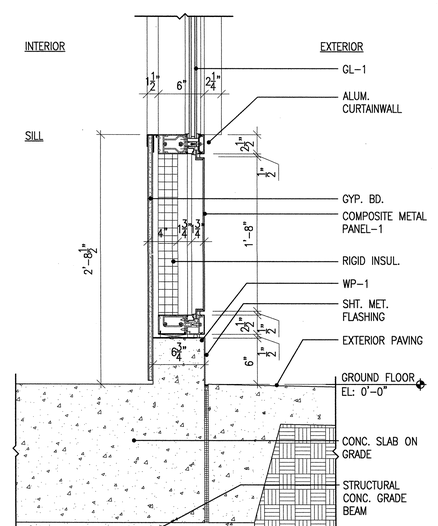

3 SECTION DETAIL AT CURTAINWALL CURB
SCALE 1 1/2"=1'-0"
A-DTEW-10

APPROVAL STAMP
IDENTIFICATION STAMP
DIVISION OF THE STATE ARCHITECT
APPL NO. 107417
AC FLS HT SS AW
DATE: 12/21/05

NO.	ISSUED FOR	DATE
1	DSA APPROVAL SET	12/08/05

LICENSED ARCHITECT ROY S. LAMKA NO. C7256 REN 7-31-07 STATE OF CALIFORNIA
CERTIFIED BY

K M D
KAPLAN McLAUGHLIN DIAZ
ARCHITECTURE PLANNING
222 VALLEJO SAN FRANCISCO, CA 94111
(415) 398-5191 FAX (415) 394-7158

SOLANO COMMUNITY COLLEGE

SCCD
VALLEJO CENTER
Contract # A003.6123.01.V1

PROJECT NO. 419-201
DATE 12-08-05

EXTERIOR DETAILS SECTION
AS BUILTS

A8.12

PLOT DATE:

COPYRIGHT © 2004 BY KMD (KAPLAN McLAUGHLIN DIAZ). ALL RIGHTS RESERVED.

PATH: G:\000\000-000\ACAD\SHEETS\

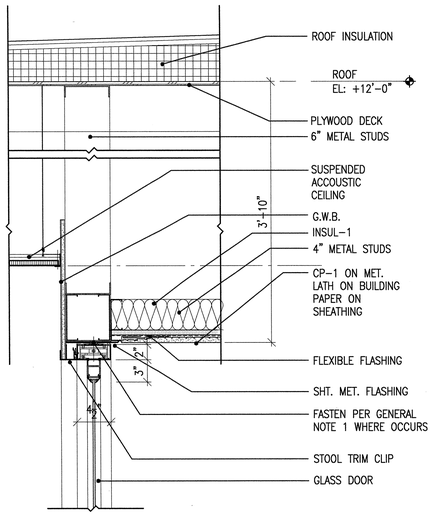

13 SECTION DTL. AT BLDG.-B ENTRY
SCALE 1 1/2"=1'-0"
A-DTEW-25

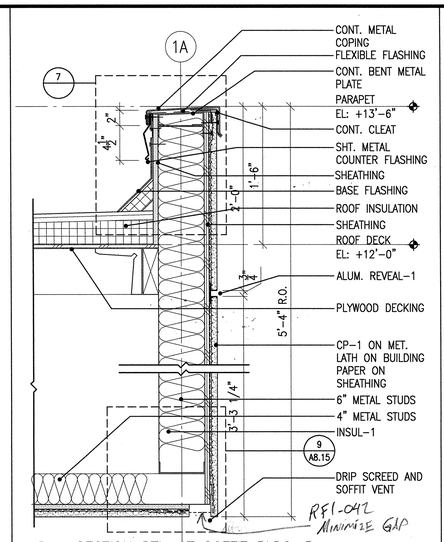

10 SECTION DTL. AT SOFFIT BLDG. B
SCALE 1 1/2"=1'-0"
A-DTEW-24

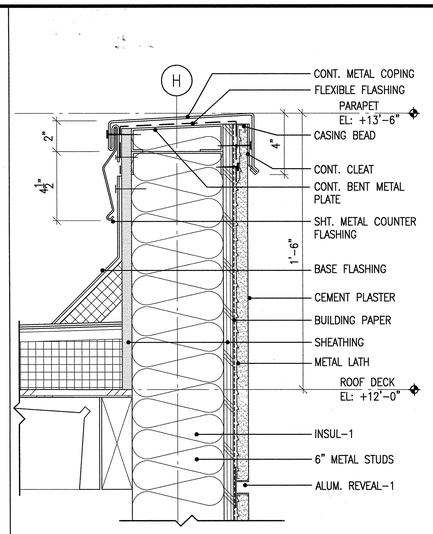

7 CEMENT PLASTER @ LOW PARAPET BLDG.-B
SCALE 3"=1'-0" CODE
FILE A8.13 EXTERIOR DETAILS SECTIONS 12/7/05

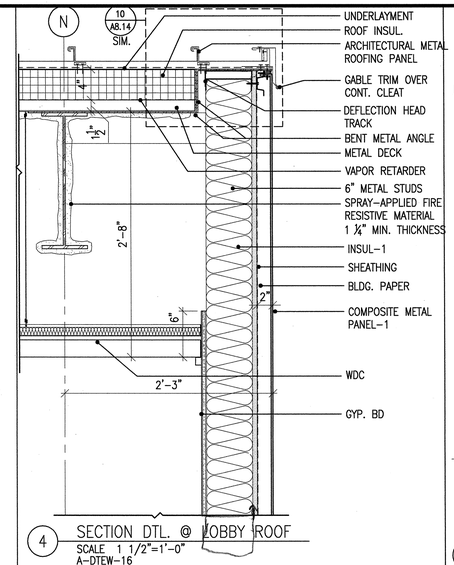

4 SECTION DTL. @ LOBBY ROOF
SCALE 1 1/2"=1'-0"
A-DTEW-16

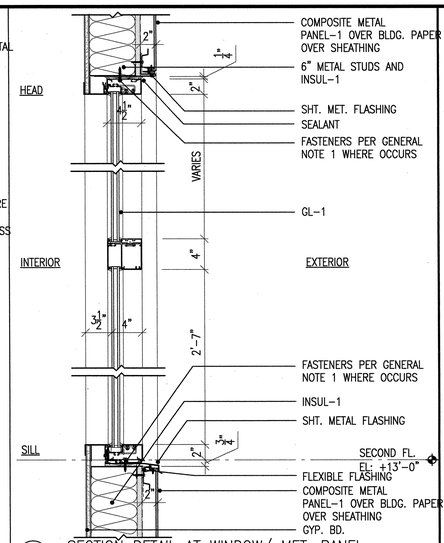

1 SECTION DETAIL AT WINDOW/ MET. PANEL
SCALE 1 1/2"=1'-0"
A-DTEW-15

GENERAL NOTES

1. FASTENERS FOR STOREFRONT & WINDOW SYSTEMS (LESS THAN 10' IN HEIGHT) SHALL BE AS FOLLOWS:

INTO MIN 16 GA. METAL STUDS: (1) #10-16 SELF-DRILLING SCREW EACH CLEAR SIDE OF VERTICAL MULLION AND 12" O.C.

INTO CONCRETE SLAB ON GRADE OPTION A: (1) ⅜"ø EXPANSION ANCHOR WITH 2½" EMBED EACH CLEAR SIDE OF VERTICAL MULLION AND 2'-0" O.C., 2½" MIN. EDGE DISTANCE.

INTO CONCRETE SLAB ON GRADE OPTION B: (1) ¼"ø CONCRETE SCREW ANCHOR WITH 1¾" EMBED EACH CLEAR SIDE OF VERTICAL MULLION AND 2'-0" O.C., 1½" MIN. EDGE DISTANCE.

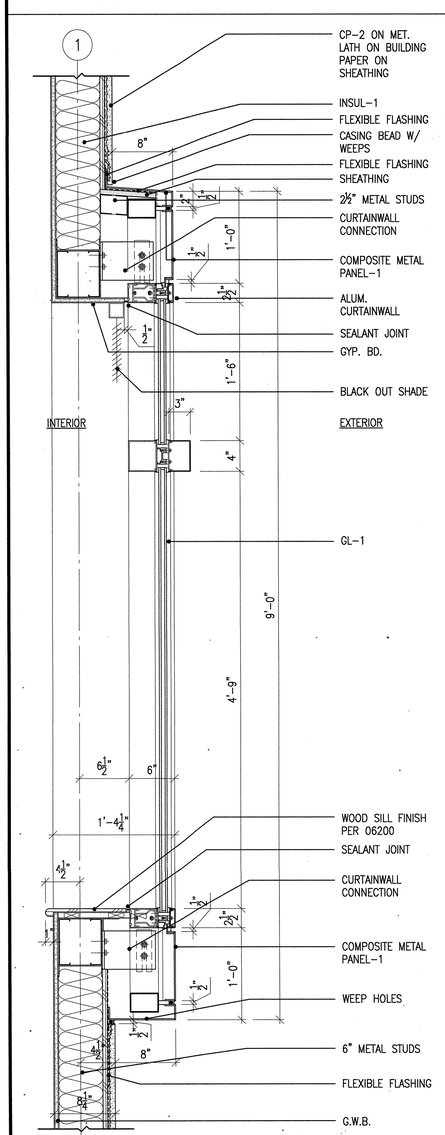

15 SECTION DTL. AT BAY WINDOW (BLDG. B)
SCALE 1 1/2"=1'-0"
A-DTEW-23

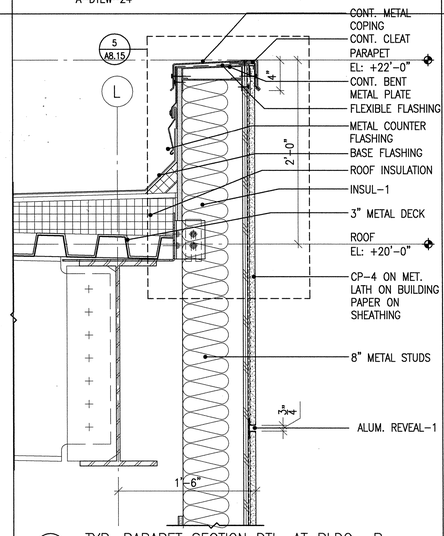

11 TYP. PARAPET SECTION DTL. AT BLDG- B
SCALE 1 1/2"=1'-0"
A-DTEW-21

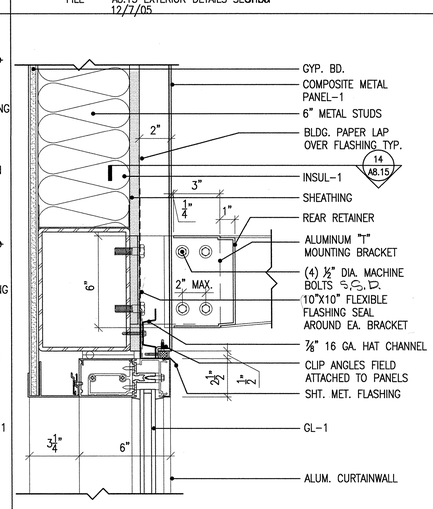

8 DETAIL @ ENTRY CURTAINWALL SUN SHADE
SCALE 3"=1'-0" CODE
FILE A8.13 EXTERIOR DETAILS SECTIONS 12/7/05

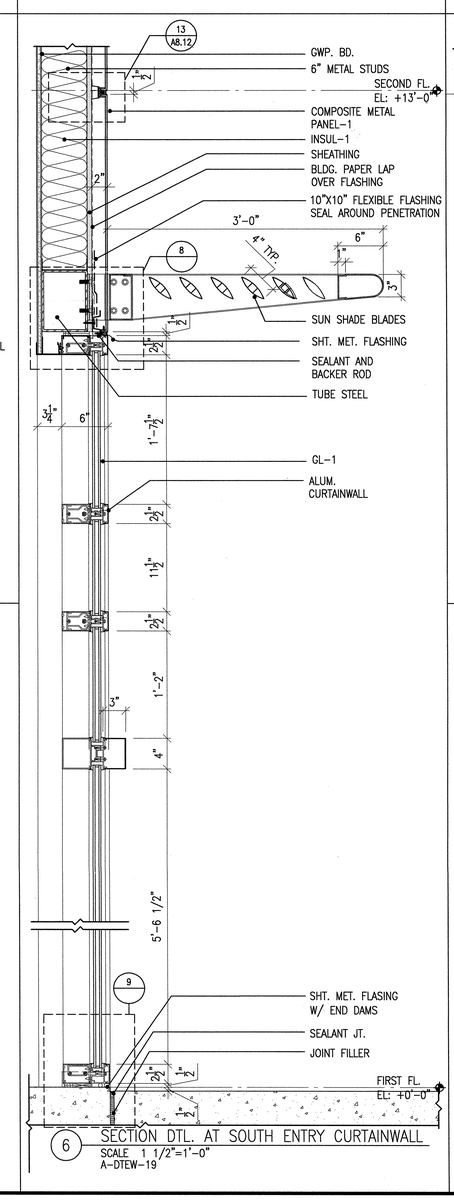

6 SECTION DTL. AT SOUTH ENTRY CURTAINWALL
SCALE 1 1/2"=1'-0"
A-DTEW-19

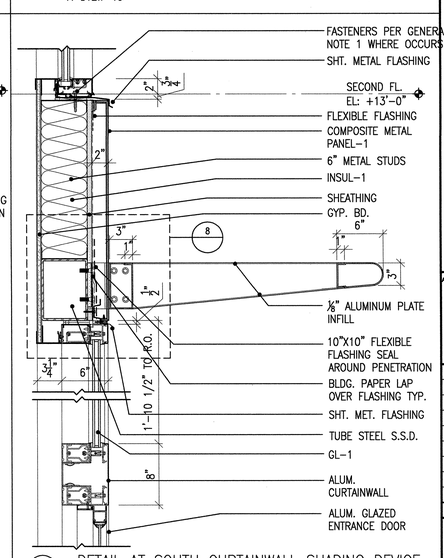

2 DETAIL AT SOUTH CURTAINWALL SHADING DEVICE
SCALE 1 1/2" = 1'-0"
REF A-DTEW-18

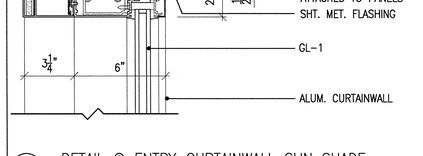

12 SECTION DTL. AT AL. WINDOW
SCALE 1 1/2"=1'-0"
A-DTEW-20

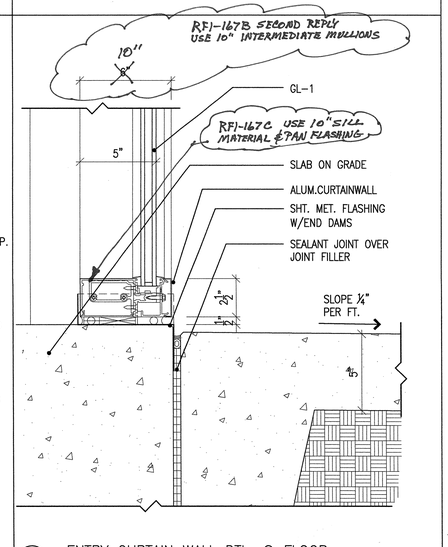

9 ENTRY CURTAIN WALL DTL. @ FLOOR
SCALE 3"= 1'-0" CODE
FILE A8.13 EXTERIOR DETAILS SECTIONS 12/7/05

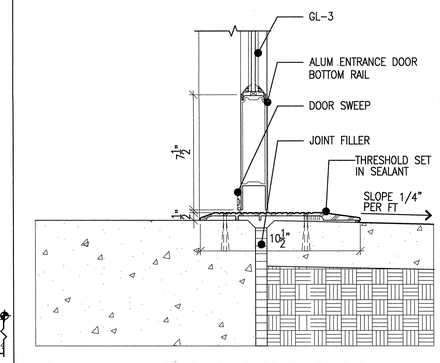

3 ALUMINUM ENTRANCE DOOR THRESHOLD
SCALE 3"=1'-0" CODE
FILE A8.13 EXTERIOR DETAILS SECTIONS 12/7/05

APPROVAL STAMP
IDENTIFICATION STAMP
DIVISION OF THE STATE ARCHITECT
APP. NO. 107417
ACC. FLS TH SS AVC
DATE: 12/21/05

NO.	ISSUED FOR	DATE
1	DSA APPROVAL SET	12/08/05

LICENSED ARCHITECT ROY S. LAVKA NO. C7256 REN. 7-31-07 STATE OF CALIFORNIA
CERTIFIED BY

K M D
KAPLAN McLAUGHLIN DIAZ
ARCHITECTURE PLANNING
222 VALLEJO SAN FRANCISCO, CA 94111
(415) 398-5191 FAX (415) 394-7158

SOLANO COMMUNITY COLLEGE

SCCD
VALLEJO CENTER
Contract # A003.6123.01.V1

PROJECT NO.	DATE
419-201	12-08-05

EXTERIOR DETAILS SECTION

AS BUILTS

A8.13

PLOT DATE:

COPYRIGHT © 2004 BY KMD (KAPLAN McLAUGHLIN DIAZ). ALL RIGHTS RESERVED.

PATH: G:\000\000-000\ACAD\SHEETS\

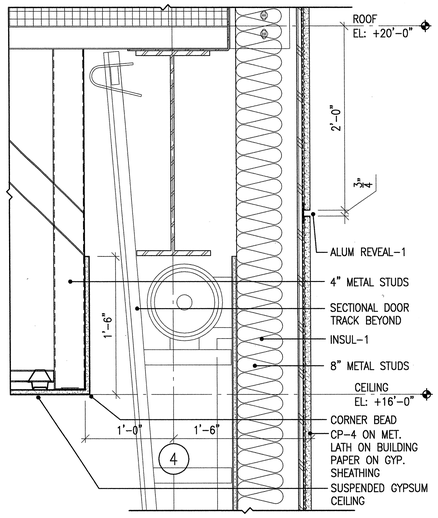

13 SECTION DTL. THRU VERTICAL DOOR CEILING POCKET
SCALE 1 1/2"=1'-0"
A-DTEW-53

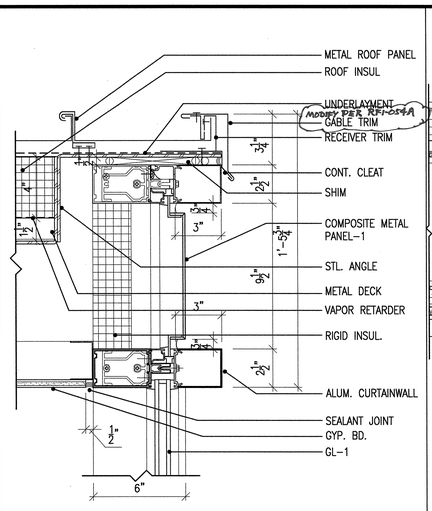

10 DETAIL @ METAL ROOF
SCALE 3"=1'-0" CODE
FILE A8.14 EXTERIOR DETAILS SECTIONS 12/7/05

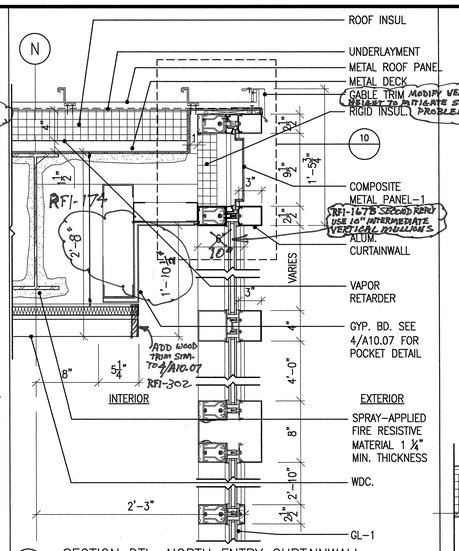

7 SECTION DTL. NORTH ENTRY CURTAINWALL
SCALE 1 1/2"=1'-0"
A-DTEW-17

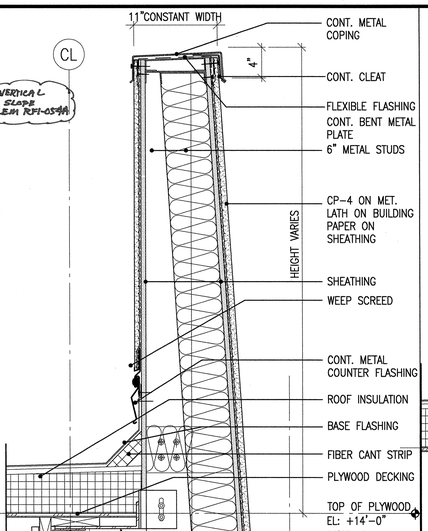

5 SECTION DTL. AT CURVED WALL BLDG.-B
SCALE 1 1/2"=1'-0"
A-DTEW-30

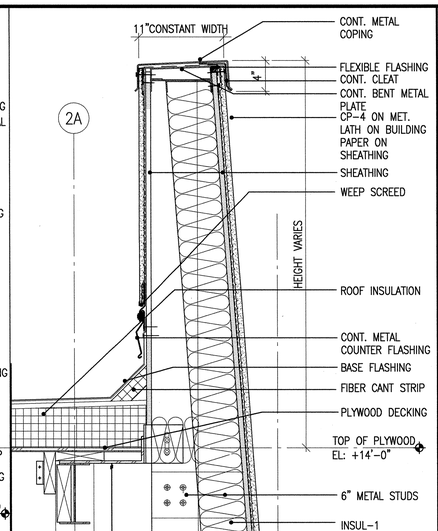

2 SECTION DTL. AT CURVED WALL BLDG.-B
SCALE 1 1/2"=1'-0"
A-DTEW-27

GENERAL NOTES

1. FASTENERS FOR STOREFRONT & WINDOW SYSTEMS (LESS THAN 10' IN HEIGHT) SHALL BE AS FOLLOWS:

INTO MIN 16 GA. METAL STUDS: (1) #10-16 SELF-DRILLING SCREW EACH CLEAR SIDE OF VERTICAL MULLION AND 12" O.C.

INTO CONCRETE SLAB ON GRADE OPTION A: (1) ⅜"ø EXPANSION ANCHOR WITH 2½" EMBED EACH CLEAR SIDE OF VERTICAL MULLION AND 2'-0" O.C., 2½" MIN. EDGE DISTANCE.

INTO CONCRETE SLAB ON GRADE OPTION B: (1) ¼"ø CONCRETE SCREW ANCHOR WITH 1¾" EMBED EACH CLEAR SIDE OF VERTICAL MULLION AND 2'-0" O.C., 1½" MIN. EDGE DISTANCE.

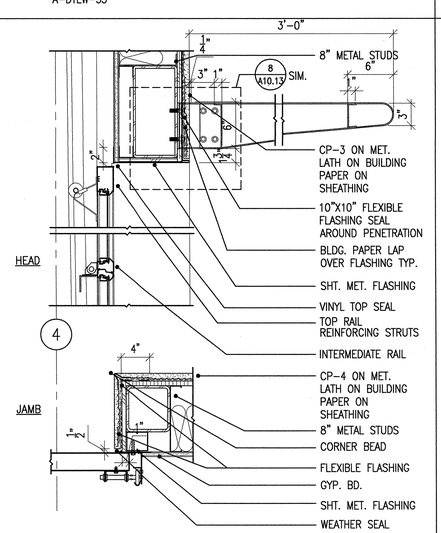

14 SECTION DTL. @ UPWARD ACTING SECTIONAL DOOR
SCALE 1 1/2"=1'-0"
A-DTEW-51

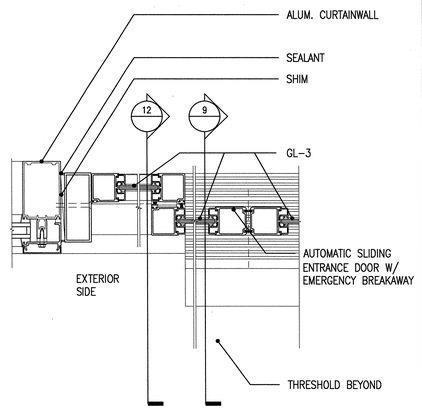

11 AUTOMATIC SLIDING ENTRANCE DOOR JAMB
SCALE 3"=1'-0" CODE
FILE A8.14 EXTERIOR DETAILS SECTIONS 12/7/05

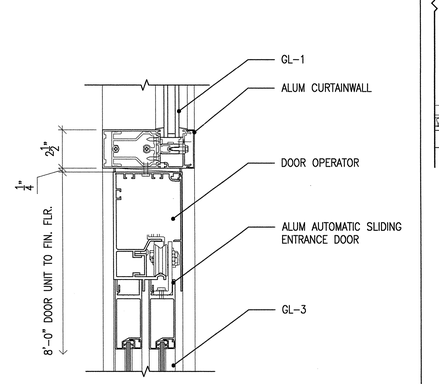

8 AUTOMATIC ENTRANCE DOOR HEAD
SCALE 3"=1'-0" CODE
FILE A8.14 EXTERIOR DETAILS SECTIONS 12/7/05

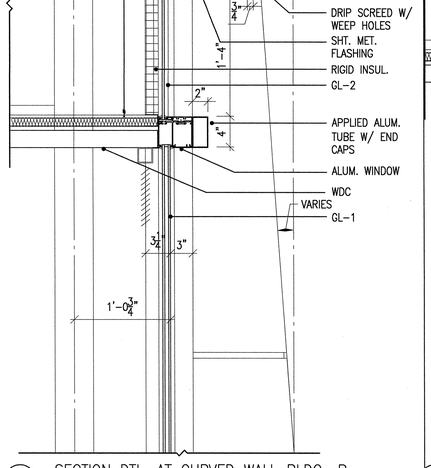

6 SECTION DTL. AT CURVED WALL BASE BLDG.-B
SCALE 1 1/2"=1'-0"
A-DTEW-31

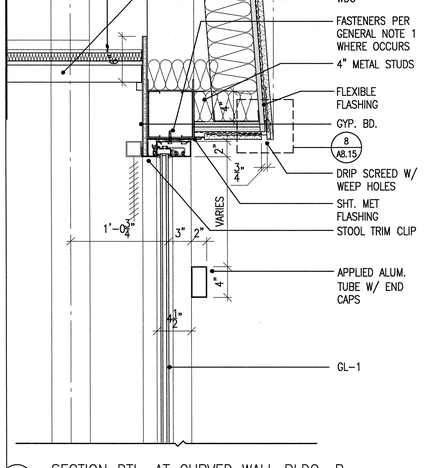

3 SECTION DTL. AT CURVED WALL BLDG.-B
SCALE 1 1/2"=1'-0"
A-DTEW-28

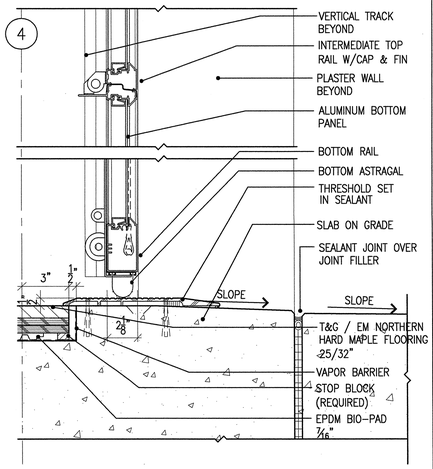

15 UPPWARD ACTING SECTIONAL DOOR DTL. @ FLOOR
SCALE 3"= 1'-0" CODE
FILE A8.14 EXTERIOR DETAILS SECTIONS 12/7/05

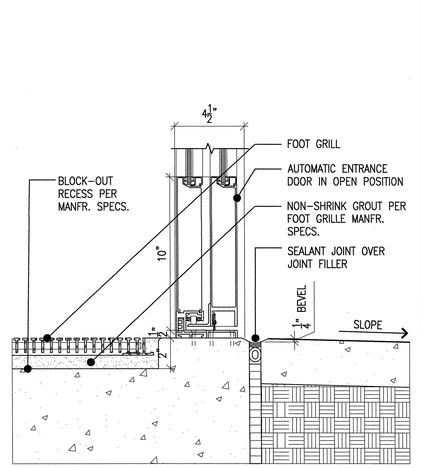

12 AUTOMATIC SLIDING DOOR THRESHOLD
SCALE 3"=1'-0" CODE
FILE A8.14 EXTERIOR DETAILS SECTIONS 12/7/05

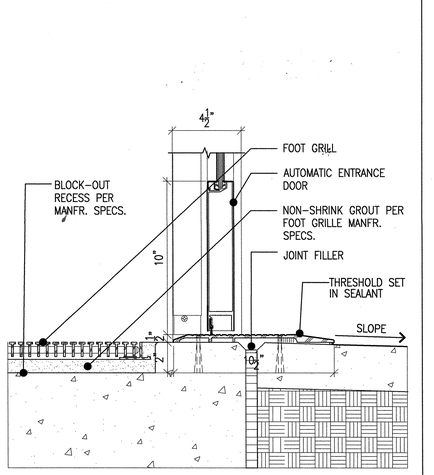

9 AUTOMATIC SLIDING DOOR THRESHOLD
SCALE 3"=1'-0" CODE
FILE A8.14 EXTERIOR DETAILS SECTIONS 12/7/05

APPROVAL STAMP
IDENTIFICATION STAMP
DIVISION OF THE STATE ARCHITECT
APPROVED 10741?
AC FLS SS
DATE: 12/21/05

NO.	ISSUED FOR	DATE
1	DSA APPROVAL SET	12/08/05

LICENSED ARCHITECT ROY S. LAVOY NO. C7256 REN. 7-31-07 STATE OF CALIFORNIA CERTIFIED BY

K M D
KAPLAN McLAUGHLIN DIAZ
ARCHITECTURE PLANNING
222 VALLEJO SAN FRANCISCO, CA 94111
(415) 398-5191 FAX (415) 394-7158

SOLANO COMMUNITY COLLEGE

SCCD
VALLEJO CENTER
Contract # A003.6123.01.V1

PROJECT NO. 419-201
DATE 12-08-05

EXTERIOR DETAILS SECTION

AS BUILTS

A8.14

PLOT DATE:

COPYRIGHT © 2004 BY KMD (KAPLAN McLAUGHLIN DIAZ). ALL RIGHTS RESERVED.

PATH: G:\000\000-000\ACAD\SHEETS\

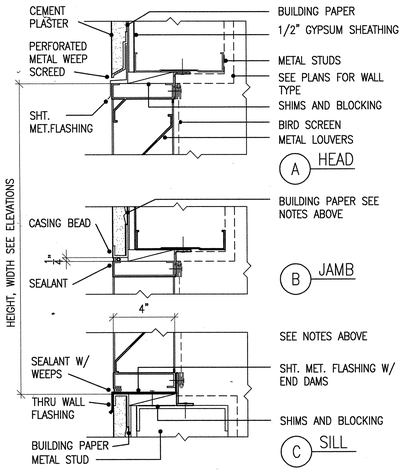

13 METAL LOUVERS IN CEMENT PLASTER OPENING
SCALE 3"=1'-0" CODE
FILE 15850-01-GS SPEC

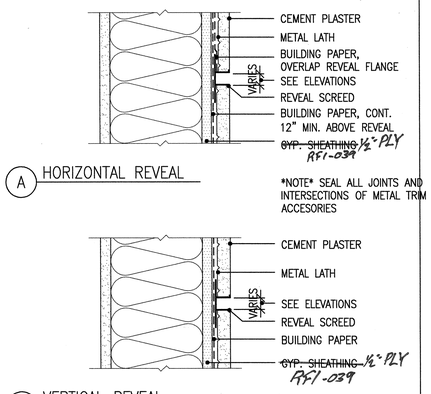

10 CEMENT PLASTER REVEAL / CONTROL JOINT
SCALE 3"=1'-0" CODE
FILE 09220-18-GR SPEC

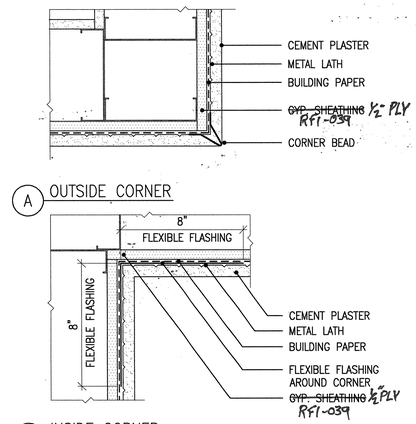

7 CEMENT PLASTER DETAILS – PLAN SECTION
SCALE 3"=1'-0" CODE
FILE 09220-20-GR SPEC

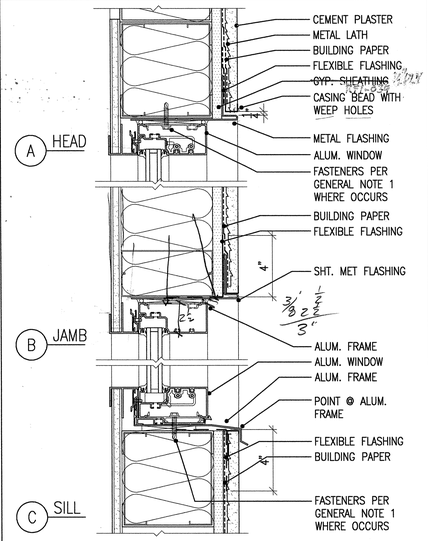

4 CEMENT PLASTER AT ALUM. WINDOW
SCALE 3"=1'-0" CODE
FILE 09220-13-GR SPEC

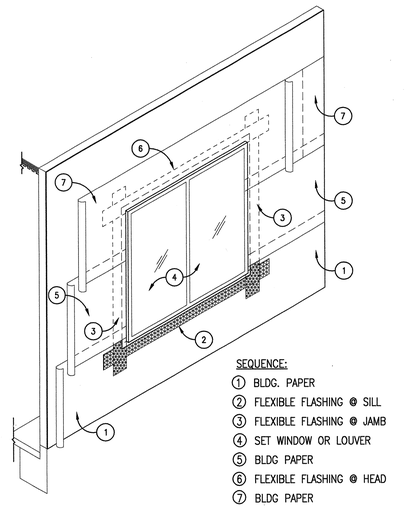

1 WATERPROOFING APPLICATION SEQUENCE
SCALE N.T.S. CODE
FILE 09220-10-GR SPEC

GENERAL NOTES

1. FASTENERS FOR STOREFRONT & WINDOW SYSTEMS (LESS THAN 10' IN HEIGHT) SHALL BE AS FOLLOWS:

INTO MIN 16 GA. METAL STUDS: (1) #10-16 SELF-DRILLING SCREW EACH CLEAR SIDE OF VERTICAL MULLION AND 12" O.C.

INTO CONCRETE SLAB ON GRADE OPTION A: (1) ⅜"ø EXPANSION ANCHOR WITH 2½" EMBED EACH CLEAR SIDE OF VERTICAL MULLION AND 2'-0" O.C., 2½" MIN. EDGE DISTANCE.

INTO CONCRETE SLAB ON GRADE OPTION B: (1) ¼"ø CONCRETE SCREW ANCHOR WITH 1¾" EMBED EACH CLEAR SIDE OF VERTICAL MULLION AND 2'-0" O.C., 1½" MIN. EDGE DISTANCE.

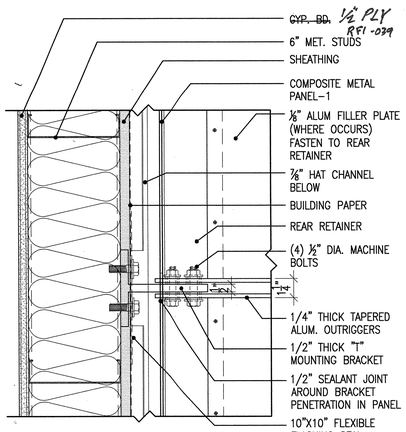

14 PLAN DETAIL SHADIND DEVICE
SCALE 3"=1'-0" CODE
FILE A-DTEWP-10 SPEC
12/7/05

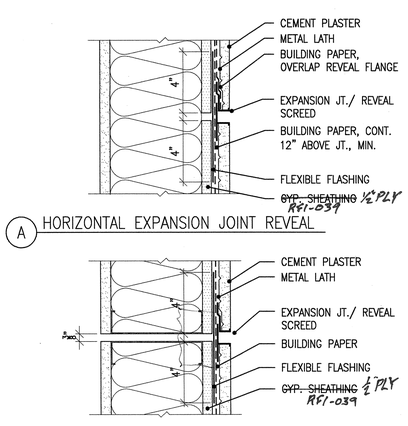

11 CEMENT PLASTER EXPANSION JOINT REVEAL
SCALE 3"=1'-0" CODE
FILE 09220-17-GR SPEC

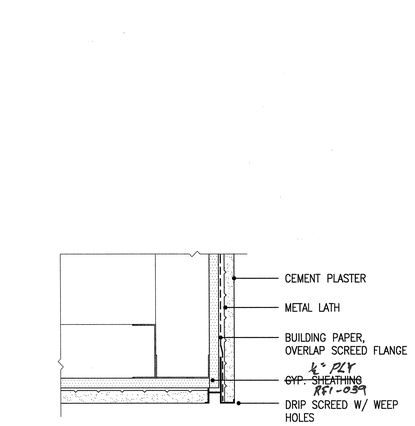

8 CEMENT PLASTER AT SOFFIT
SCALE 3"=1'-0" CODE
FILE 09220-19-GR SPEC

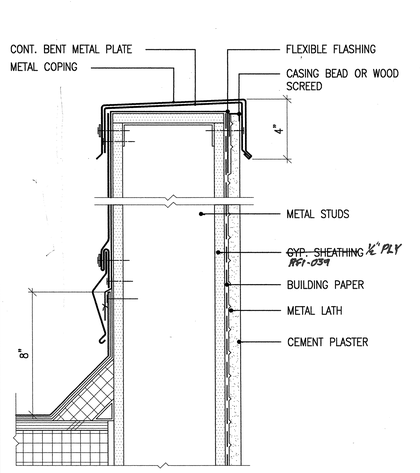

5 CEMENT PLASTER AT PARAPET
SCALE 3"=1'-0" CODE
FILE 09220-12-GR SPEC

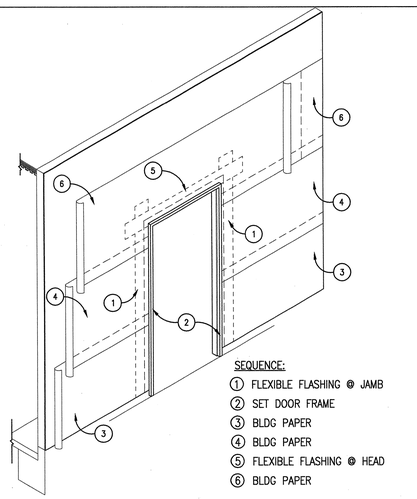

2 WATERPROOFING APPLICATION SEQUENCE
SCALE 3"=1'-0" CODE
FILE 09220-11-GR SPEC

NOTE: RFI-062A CONFIRMED THAT NO BOX HEADER IS REQUIRED ABOVE COMPENSATION JOINTS. USE DETAIL 4/S8.02 FOR FRAMING OF COMPENSATION JOINTS.

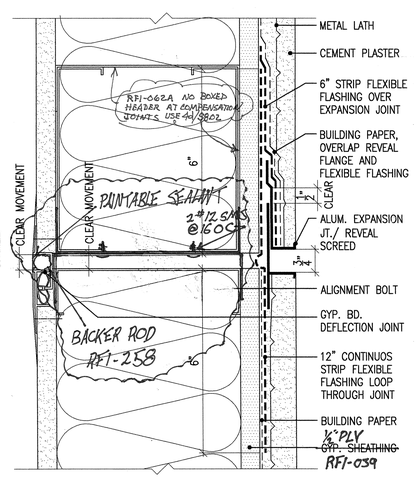

12 CEMENT PLASTER COMPENSATION JOINT DETAIL
SCALE 6"=1'-0" CODE
FILE 09220-21-GR SPEC

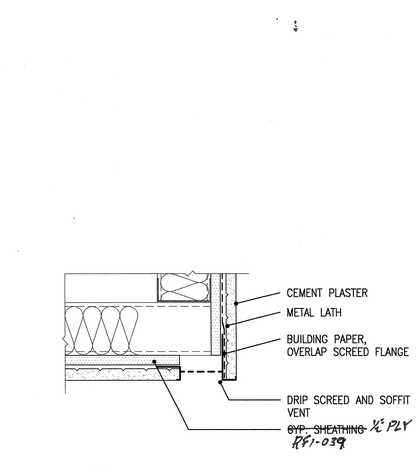

9 CEMENT PLASTER AT SOFFIT VENTS
SCALE 3"=1'-0" CODE
FILE 09220-22-GR SPEC

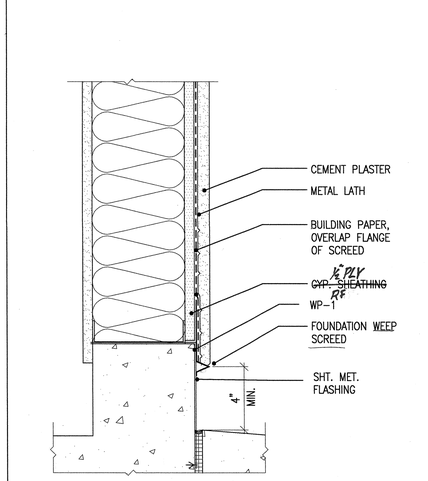

6 CEMENT PLASTER AT FOUNDATION
SCALE 3"=1'-0" CODE
FILE 09220-14-GR SPEC

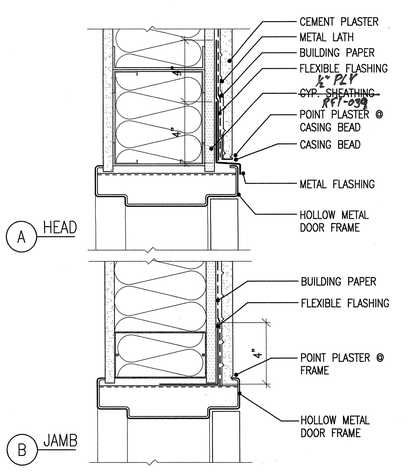

3 CEMENT PLASTER AT HOLLOW METAL FRAME
SCALE 3"=1'-0" CODE
FILE 09220-15-GR SPEC

APPROVAL STAMP
IDENTIFICATION STAMP
DIVISION OF THE STATE ARCHITECT
APPL 02- 107417
AC FLS SS
DATE: 12/21/05

NO.	ISSUED FOR	DATE
1	DSA APPROVAL SET	12/08/05

LICENSED ARCHITECT ROY S. LATAH NO. C7256 REN. 7-31-06 STATE OF CALIFORNIA
CERTIFIED BY

K M D
KAPLAN McLAUGHLIN DIAZ
ARCHITECTURE PLANNING
222 VALLEJO SAN FRANCISCO, CA 94111
(415) 398-5191 FAX (415) 394-7158

SOLANO COMMUNITY COLLEGE

SCCD
VALLEJO CENTER
Contract # A003.6123.01.V1

PROJECT NO. 419-201
DATE 12-08-05

EXTERIOR DETAILS
AS BUILTS

A8.15

PLOT DATE:

COPYRIGHT © 2004 BY KMD (KAPLAN McLAUGHLIN DIAZ). ALL RIGHTS RESERVED.

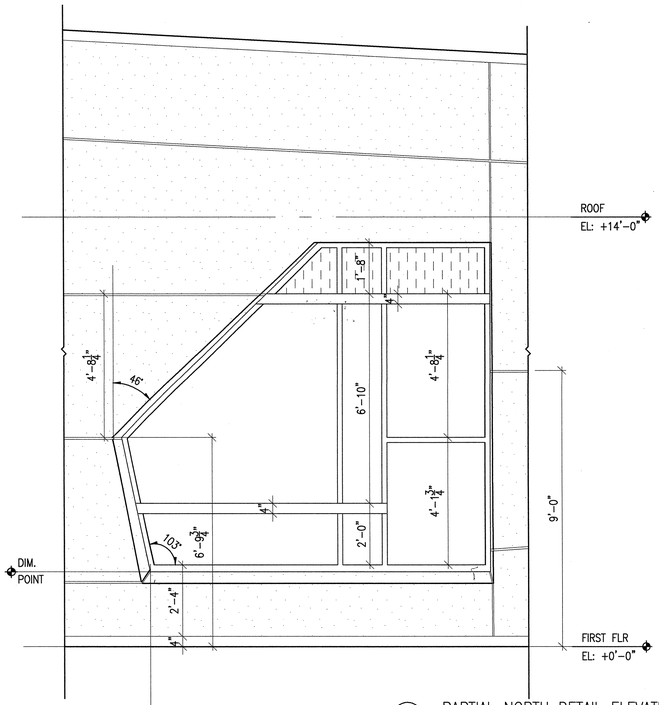

2 PARTIAL NORTH DETAIL ELEVATION
SCALE 1/2" = 1'-0"
REF

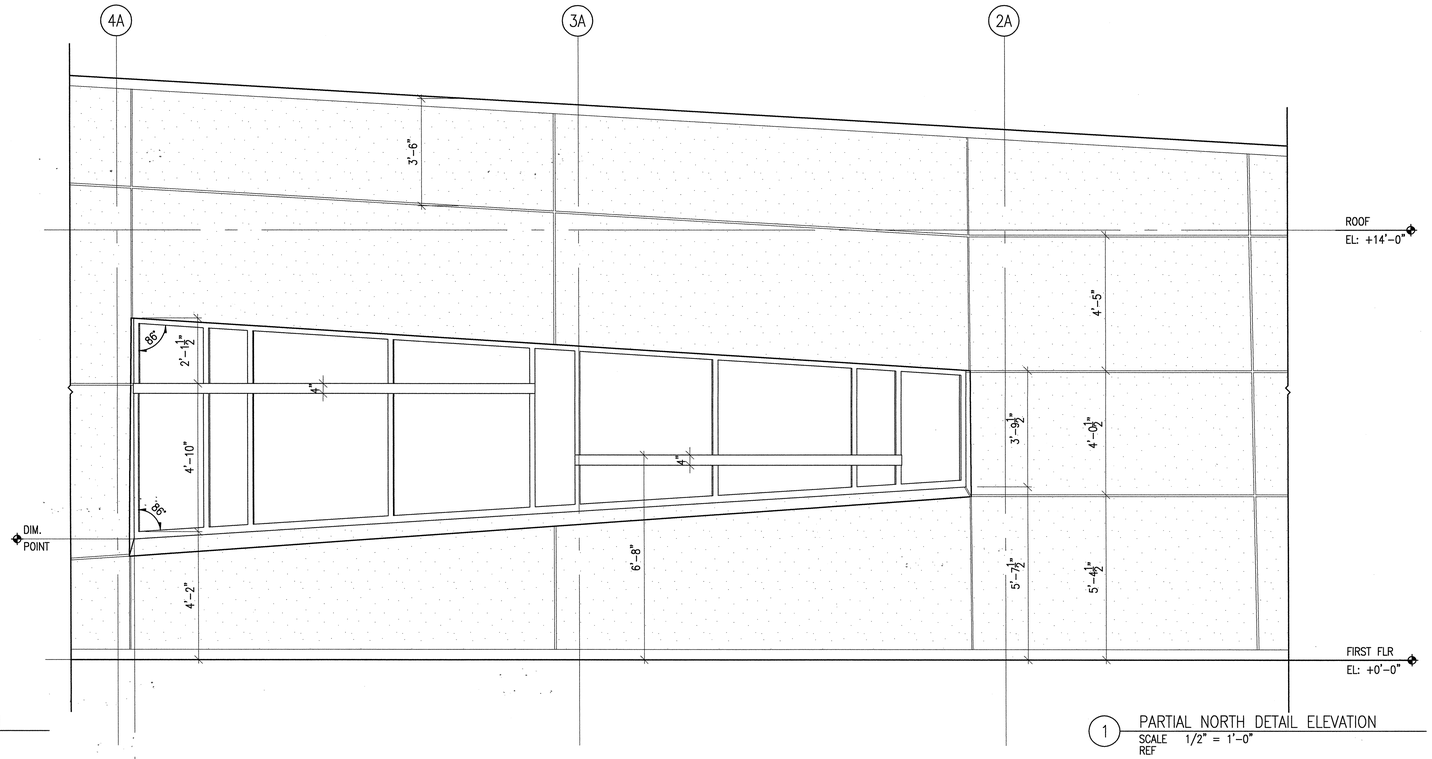

1 PARTIAL NORTH DETAIL ELEVATION
SCALE 1/2" = 1'-0"
REF

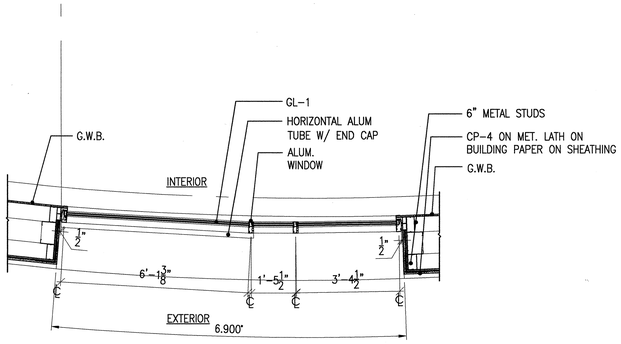

4 PLAN SECTION AT CURVED WALL
SCALE 1/2" = 1'-0"
REF

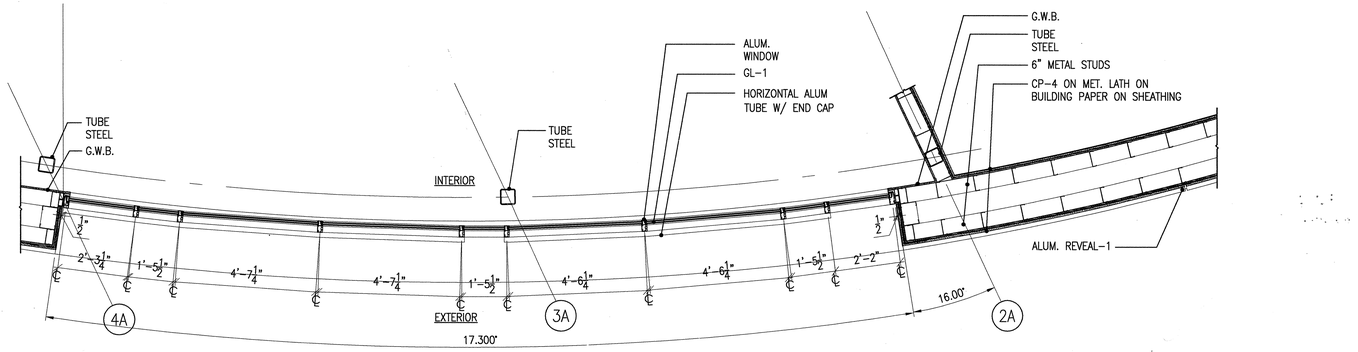

3 PLAN SECTION AT CURVED WALL
SCALE 1/2" = 1'-0"
REF

APPROVAL STAMP
IDENTIFICATION STAMP
DIVISION OF THE STATE ARCHITECT
APPL.02- 107417
AC FLS SS
DATE: 12/21/05

NO.	ISSUED FOR	DATE
1	DSA APPROVAL SET	12/08/05

LICENSED ARCHITECT
ROY S. LANG
NO. C7256
REN. 7-31-07
STATE OF CALIFORNIA
CERTIFIED

K M D
KAPLAN McLAUGHLIN DIAZ
ARCHITECTURE PLANNING
222 VALLEJO SAN FRANCISCO, CA 94111
(415) 398-5191 FAX (415) 394-7158

SOLANO COMMUNITY COLLEGE

SCCD
VALLEJO CENTER
Contract # A003.6123.01.V1

PROJECT NO. 419-201
DATE 12-08-05

EXTERIOR DETAILS
AS BUILTS

A8.16

PLOT DATE:

COPYRIGHT © 2004 BY KMD (KAPLAN McLAUGHLIN DIAZ). ALL RIGHTS RESERVED.

PATH: G:\000\000-000\ACAD\SHEETS\

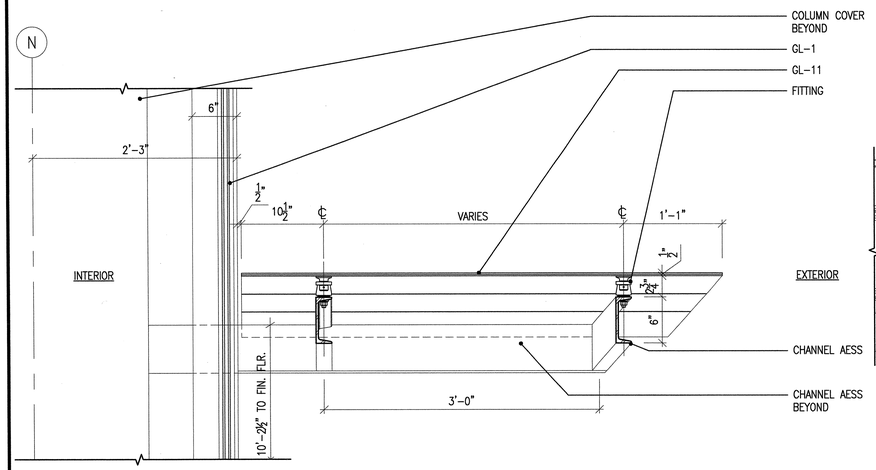

5 SECTION DTL. AT ENTRY CANOPY
SCALE 1 1/2"=1'-0"
A-DTEW-40

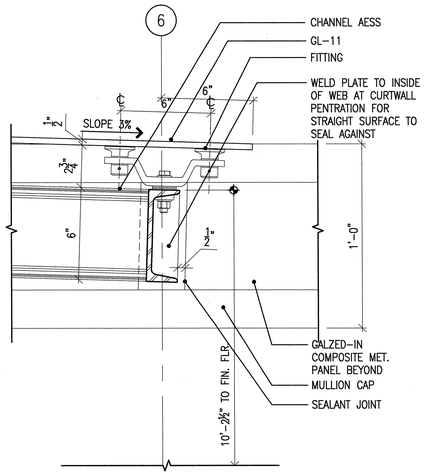

4 ENTRY CANOPY FITTING DETAIL
SCALE 3"=1'-0" CODE
FILE A8.17 EXTERIOR DETAILS CANOPY
12/7/05

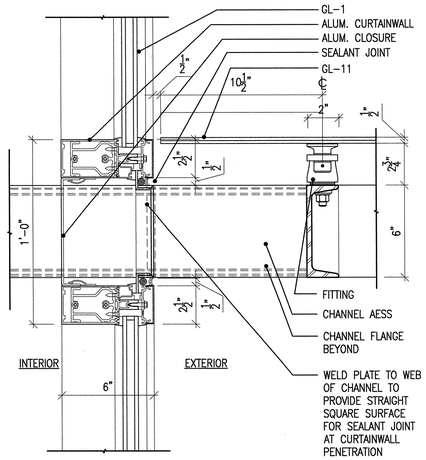

3 ENTRY CANOPY CONNECTION DETAIL
SCALE 3"=1'-0" CODE
FILE A8.17 EXTERIOR DETAILS CANOPY
12/7/05

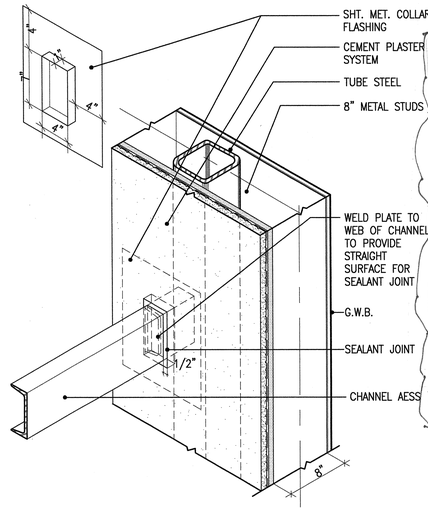

1 CANOPY C-SECTION @ WALL
SCALE N.T.S.
A-DTEW-43

Ralph Larsen & Son, Inc.
General Contractors License No. 169541
320 St. Avenue
San Mateo, CA. 94401-4221
Phone: (650) 579-6539
Fax: (650) 579-0749

Request for Information 234

Detailed, RFIs Grouped by RFI Number

Vallejo Center for Solano Community College Dis — Project # 2004 — Ralph Larsen & Son, Inc.
Northgate Business Park
545 Columbus Parkway
Vallejo, CA 94591 — Tel: (707) 649-8327 Fax: (707) 553-9728

RFI #: 234 — Date Created: 1/12/2007

Answer Company — Answered By — Author Company — Authored By
Ralph Larsen & Son, Inc. — Jay Tucker
320 St. Avenue
San Mateo, CA. 94401

Co-Respondent — Author RFI Number

Subject — Discipline — Category
Structural bolts conflict with flashing collar 1/A8.17

Cc: Company Name — Contact Name — Copies — Notes

Question — Date Required: 1/24/2007
The structural bolt closest to the exterior building wall that connects the (glass canopy) channel beam confilts with the collar flashing required to seal the channel at the exterior building wall. The existing (existing) in order to achieve the collar flashing necessary to seal the channel at the exterior building wall. The structural connection at the (glass canopy) channel support beam may look better if the connection is fully welded and the bolts are omitted totally. However the bolt closest to the building exterior walls must be removed if we are to achieve a water tight seal. We will need to weld the bolt hole closed to provide a smooth surface to seal this channel to the exterior building paper and or flexible flashing material.
1. How much weld is needed to replace at least the bolt located closest to the exterior building wall?
2. Will this weld complete the connection completely and eliminate both bolts?
3. If the answer to question #2 is yes, what amount of weld is required to remove both bolts that are visible for the channel connection point?

Suggestion

Answer — Date Answered:
IF WELDING IS TO BE USED IN LIEU OF BOLTING, THE FOLLOWING SKETCH CAN BE USED:
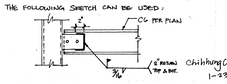

RFI 277A
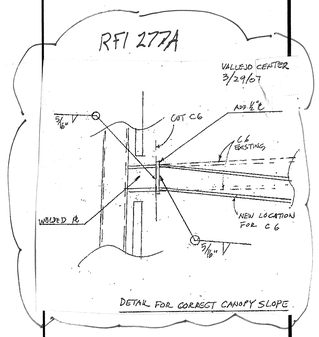

6
20'-1"
3'-0" 3'-0" 3'-0" 3'-0" 3'-0" 3'-0" 3'-0"
1/2"
1'-1"
6"
3'-0"
2"
4
2"
10 1/2"
1/2"
3
2'-3"
SLOPE 3%
5
7
SEALANT JOINT
GL-11
FITTING
CHANNEL AESS
CENTER LINE OF WALL
1
GL-1
ALUM. CURTAINWALL
CP-4 ON MET. LATH ON BUILDING PAPER ON SHEATHING
STAIR BELOW
COMPOSITE METAL PANEL-1
CHANNEL AESS
8" METAL STUDS
1
SIM.
LAP BLDG. PAPER OVER FLEXIBLE FLASHING OVER CASING BEAD
8" STRIP FLEXIBLE FLASHING BEHIND ENTIRE JOINT
6" METAL STUDS
2 1/2" METAL STUDS
GYP. BD.
6"
EXTERIOR
5"
1'-9"
7 1/4"
1'-0"
INTERIOR
N

2 PLAN SECTION AT ENTRY CANOPY
SCALE 1-1/2" = 1'-0"
REF A-DTEWP-09

APPROVAL STAMP
IDENTIFICATION STAMP
DIVISION OF THE STATE ARCHITECT
APP/APP- 107417
ACC FLS TH SS MC
DATE: 12/12/05

NO.	ISSUED FOR	DATE
1	DSA APPROVAL SET	12/08/05

LICENSED ARCHITECT
ROY S. SANTOS
NO. C7256
REN. 7-31-06
STATE OF CALIFORNIA
CERTIFIED

K M D
KAPLAN McLAUGHLIN DIAZ
ARCHITECTURE PLANNING
222 VALLEJO SAN FRANCISCO, CA 94111
(415) 398-5191 FAX (415) 394-7158

SOLANO COMMUNITY COLLEGE

SCCD
VALLEJO CENTER
Contract # A003.6123.01.V1

PROJECT NO. 419-201
DATE 12-08-05

EXTERIOR DETAILS CANOPY
AS BUILTS

A8.17

PLOT DATE:

COPYRIGHT © 2004 BY KMD (KAPLAN McLAUGHLIN DIAZ). ALL RIGHTS RESERVED.

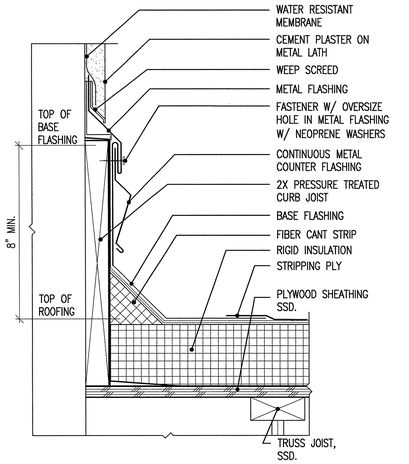

10 FLASHING AT PARAPET
SCALE 3"=1'-0" CODE
FILE 07620-03-GR SPEC

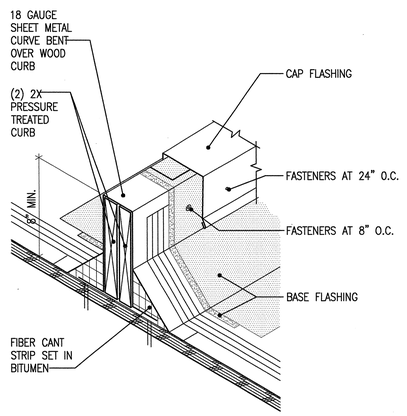

7 AREA DIVIDER/EQUIPMENT SUPPORT
SCALE N.T.S. CODE
FILE 07720-20-GR SPEC

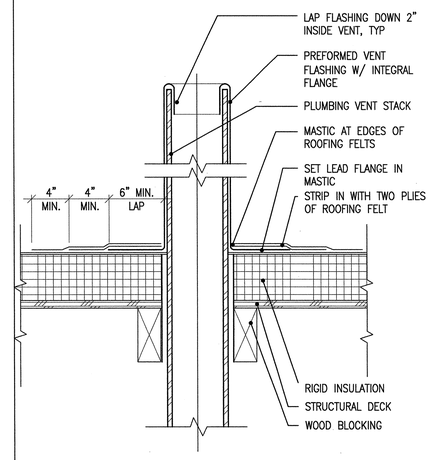

4 TYPICAL VENT STACK PENETRATION
SCALE 3"=1'-0" CODE
FILE 07720-26-GR SPEC

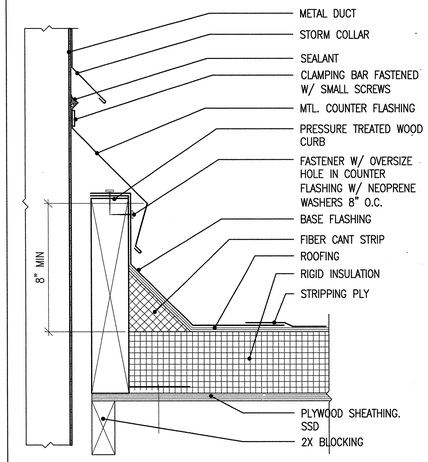

1 DUCT PENETRATION
SCALE 3"=1'-0" CODE
FILE 07720-06-GR SPEC

From: Chih-Hung Cheng [Cheng@dasse.com]
Sent: Thursday, February 08, 2007 1:12 PM
To: d'Arcy Howard; Melanie Kung
Cc: Jay Tucker
Subject: Vallejo Center, Roof Stair

d'Arcy and Melanie,

Based on the detail (sketches and photos sent by the Contractor, see attached) I have reviewed the connection, the pipe sleeve base and pipe railing and found the assembly meets the loading requirements per California Building Code. Please let me know if you have any further questions.

Regards,

Chih-hung

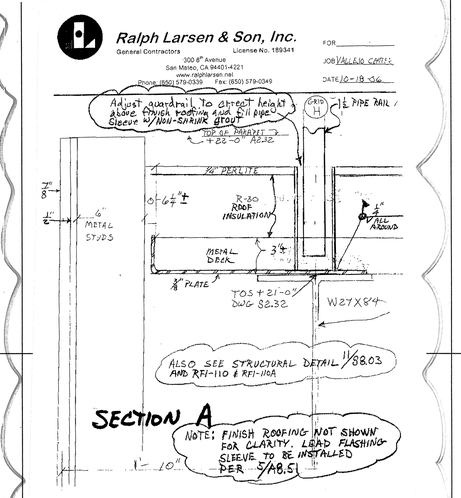

11 GUARDRAIL ANCHORAGE UPPER ROOF

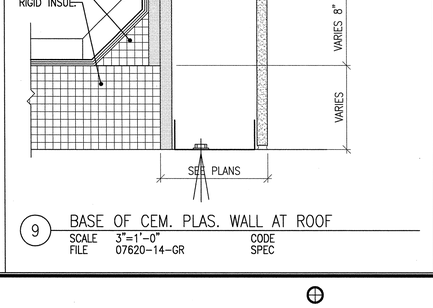

8 FLASHING AT LOW ROOF STRUCTURE
SCALE 3"=1'-0" CODE
FILE 07620-12-GR SPEC

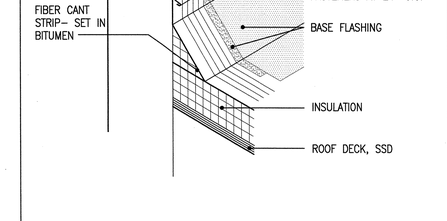

5 TYPICAL STRUCTURAL PENETRATION
SCALE 3"=1'-0" CODE
FILE 07720-25-GR SPEC

2 CONTRACTION JOINT
SCALE 3"=1'-0" CODE
FILE 07710-06-GR SPEC

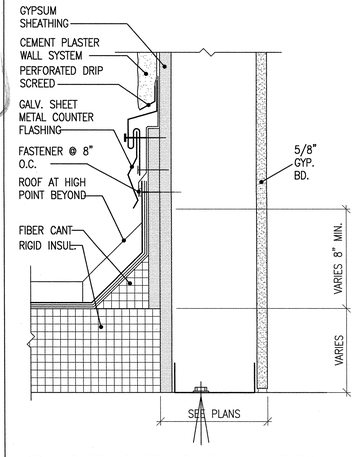

9 BASE OF CEM. PLAS. WALL AT ROOF
SCALE 3"=1'-0" CODE
FILE 07620-14-GR SPEC

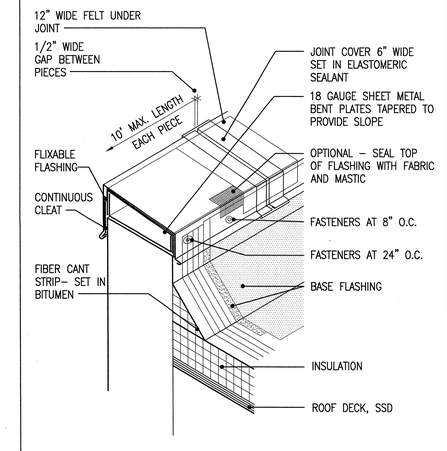

6 PARAPET CAP
SCALE N.T.S. CODE
FILE 07620-20-GR SPEC

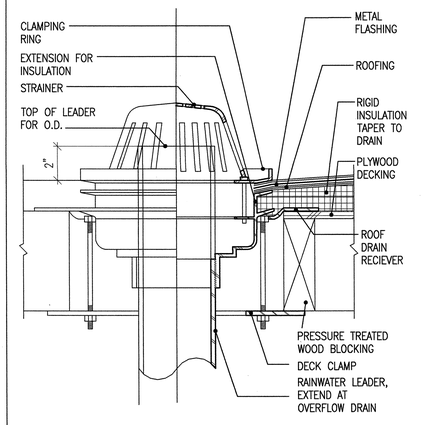

3 TYPICAL ROOF DRAIN
SCALE 3"=1'-0" CODE
FILE 07710-10-GR SPEC

APPROVAL STAMP
IDENTIFICATION STAMP
DIVISION OF THE STATE ARCHITECT
APP. NO. 107417
AC FLS SS
DATE: 12/21/05

NO.	ISSUED FOR	DATE
1	DSA APPROVAL SET	12/08/05

LICENSED ARCHITECT ROY S. LUDEKE NO. C7256 REN. 7-31-06 STATE OF CALIFORNIA CERTIFIED

K M D
KAPLAN McLAUGHLIN DIAZ
ARCHITECTURE PLANNING
222 VALLEJO SAN FRANCISCO, CA 94111
(415) 398-5191 FAX (415) 394-7158

SOLANO COMMUNITY COLLEGE

SCCD
VALLEJO CENTER
Contract # A003.6123.01.V1

PROJECT NO. 419-201
DATE 12-08-05

EXTERIOR DETAILS ROOF
AS BUILTS

A8.51

COPYRIGHT © 2004 BY KMD (KAPLAN McLAUGHLIN DIAZ). ALL RIGHTS RESERVED.

PATH: G:\000\000-000\ACAD\SHEETS\

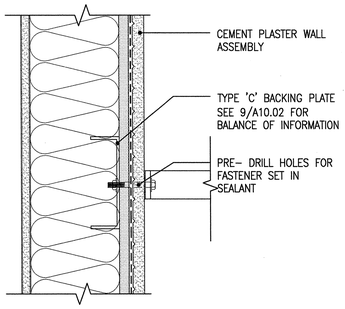

13 ROOF LADDER AT WALL ANCHOR
SCALE 3" = 1'-0" CODE
FILE A-DTEW-55 12/7/05 SPEC

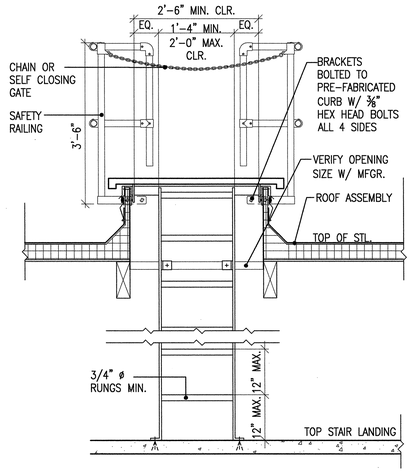

10 ROOF HATCH/SAFETY RAILING
SCALE 3/4"=1'-0" CODE
FILE 07720-11-GR SPEC

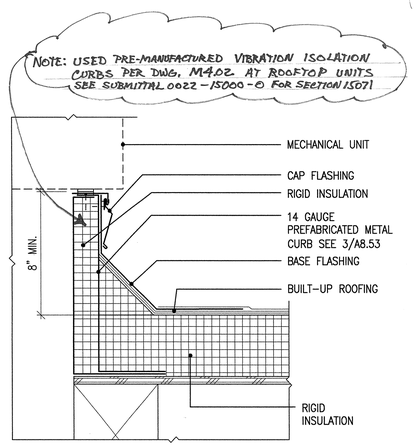

7 MECHANICAL UNIT CURB
SCALE 3"=1'-0" CODE
FILE 07720-05-GR SPEC

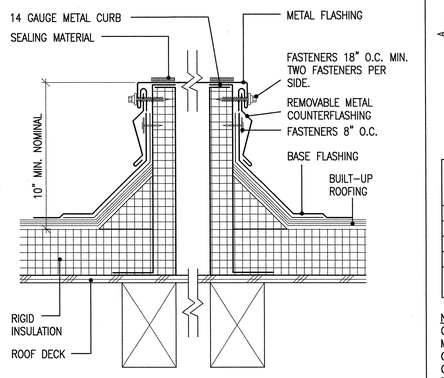

4 RAISED PREFABRICATED METAL CURB DETAIL
SCALE 3"=1'-0" CODE
FILE 07720-29-GR SPEC

FOR METAL FASCIA EXPOSED TO VIEW

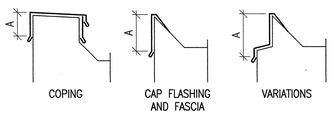

RECOMMENDED MINIMUM GAUGES FOR FASCIA SHOWN ABOVE

EXPOSED FACE w/o BRAKES "A" DIM.	CLEAT REQ'D	GALV. IRON	COLD ROLLED COPPER	ALUMINUM 3003-H14
UP TO 4"	NO	26 GA.	16 OZ.	.032" (20 GA.)
4" TO 6"	YES	26 GA.	16 OZ.	.040" (18 GA.)
6" TO 8"	YES	24 GA.	16 OZ.	.050" (16 GA.)
8" TO 10"	YES	22 GA.	20 OZ.	.064" (14 GA.)
10" TO 15"	YES	20 GA.	ADD BRAKES TO STIFFEN	.080" (12 GA.)

NOTE: WHEN USING THE ABOVE TABLE, OTHER ITEMS SHOULD BE CONSIDERED, SUCH AS FASTENING PATTERN. FOR INSTANCE, IF THE METAL CAN ONLY BE FASTENED AT 10 FOOT INTERVALS, A HEAVIER GAUGE METAL WOULD BE REQUIRED. ALL CLEATS SHALL BE CONTINUOUS AND OF SAME MATERIAL OF EQUAL OR GREATER THICKNESS THAN THE FASCIA METAL USED.

1 GAUGE OR THICKNESS GUIDE
SCALE N.T.S. CODE
FILE 07620-19-GS SPEC

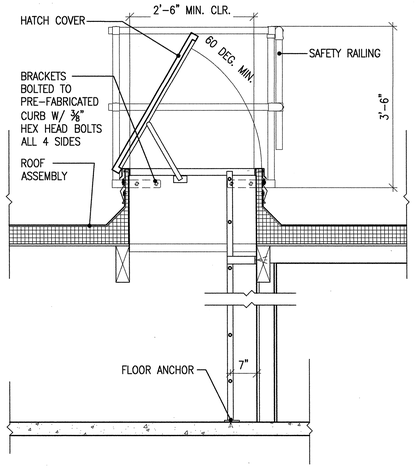

11 ROOF HATCH AND SAFETY RAILING- SIDE VIEW
SCALE 3/4"=1'-0" CODE
FILE 07720-12-GR SPEC

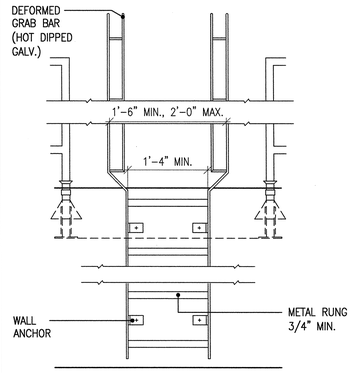

8 ROOF LADDER FRONT VIEW
SCALE 1"=1'-0" CODE
FILE 07720-09-GR SPEC

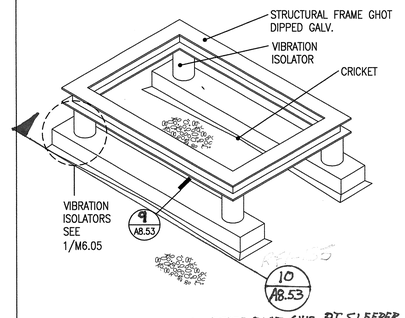

SEE RFI-135 CHANGE TO THREE FLAT 6X12 PT. SLEEPER TO ACHIEVE PROPER HEIGHT FOR ROOFING. TURN UP 8" MIN.

5 FLUID COOLER STAND
SCALE N.T.S. CODE
FILE 07720-15-GR SPEC

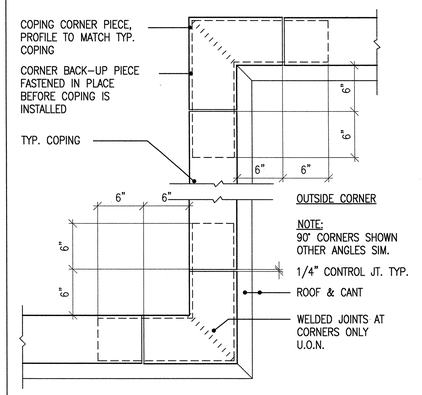

2 COPING AT CORNERS
SCALE 1 1/2"=1'-0" CODE
FILE 07620-24-GS SPEC

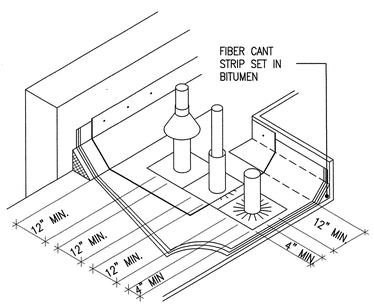

12 MULTIPLE PIPE CLEARANCES DIAGRAM
SCALE N.T.S. CODE
FILE 07720-16-GS SPEC

RFI-134

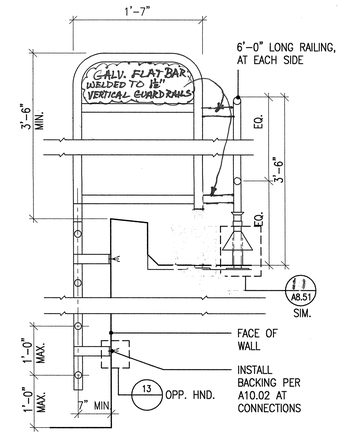

9 ROOF LADDER SIDE VIEW
SCALE 1"=1'-0" CODE
FILE 07720-10-GR SPEC

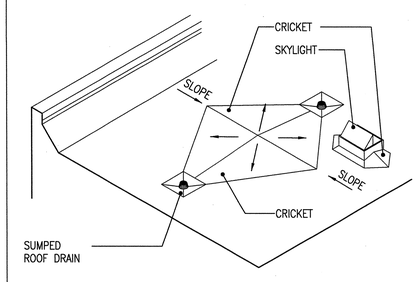

6 CRICKETS DIAGRAM
SCALE N.T.S. CODE
FILE 07700-01-GS SPEC

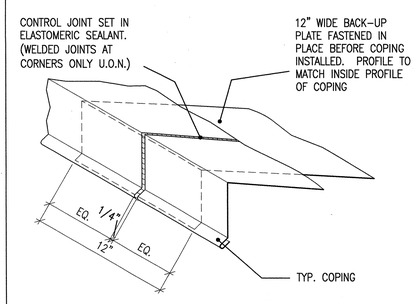

3 COPING CONTROL JOINT
SCALE N.T.S. CODE
FILE 07620-25-GR SPEC

APPROVAL STAMP
IDENTIFICATION STAMP
DIVISION OF THE STATE ARCHITECT
APPL. 00- 107417
AC FLS FH SS NL
DATE: 12/21/05

NO.	ISSUED FOR	DATE
1	DSA APPROVAL SET	12/08/05

LICENSED ARCHITECT ROY S. LAUGHLIN NO. C7256 REN. 7-31-06 STATE OF CALIFORNIA
CERTIFIED BY

K M D
KAPLAN McLAUGHLIN DIAZ
ARCHITECTURE PLANNING
222 VALLEJO SAN FRANCISCO, CA 94111
(415) 398-5191 FAX (415) 394-7158

SOLANO COMMUNITY COLLEGE

SCCD
VALLEJO CENTER
Contract # A003.6123.01.V1

PROJECT NO. 419-201
DATE 12-08-05

EXTERIOR DETAILS ROOF
AS BUILTS

A8.52

PLOT DATE:

COPYRIGHT © 2004 BY KMD (KAPLAN McLAUGHLIN DIAZ). ALL RIGHTS RESERVED.

AS BUILT

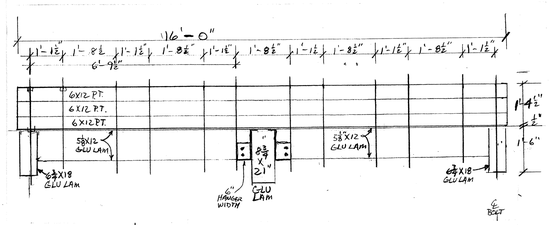

10 ANCHORAGE OF SLEEPERS TO STRUCTURE

NOTE: EQUIPMENT ISOLATORS AND STEEL SUPPORT FRAME NOT SHOWN.

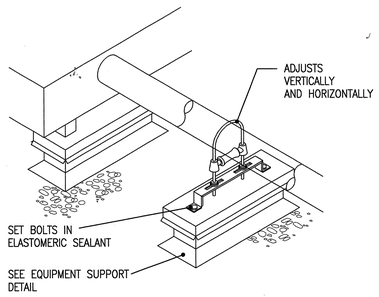

7 PIPE ROLLER SUPPORT
SCALE N.T.S. CODE
FILE 07720-24-GR SPEC

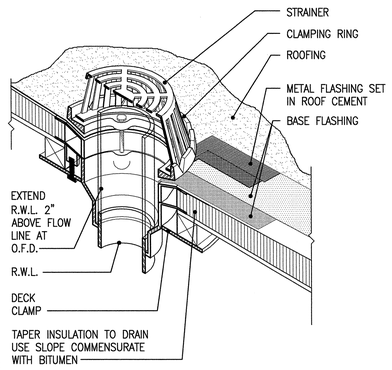

4 ROOF DRAIN
SCALE N.T.S. CODE
FILE 07710-09-GR SPEC

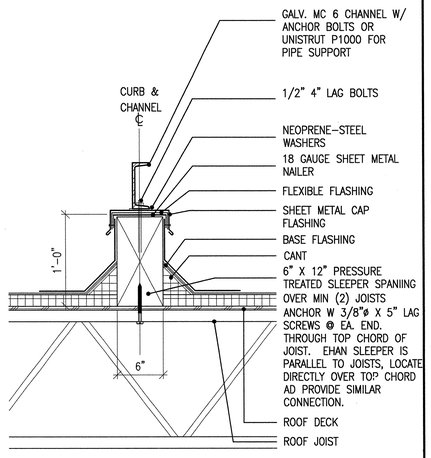

1 MECH. DUCT, PIPE & LADDER SUPPORT
SCALE 1 1/2"=1'-0" CODE
FILE 07720-31-GR SPEC
NOT USED

SCCD 419-201 05/15/06 2/6

1SK-1

RFI-014
HEADER FOR 24'-0 WIDE OPENING @ 15/A10.23

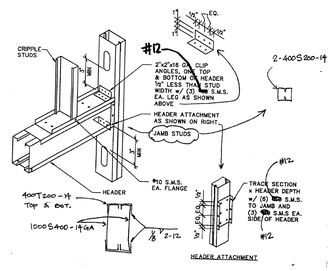

11 HEADER @ SLIDING MARKER BD
SEE DETAIL 15/A10.23 & RFI-014

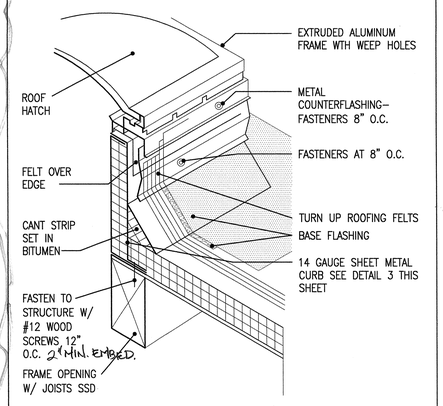

8 ROOF HATCH WATERPROOFING DIAGRAM
SCALE N.T.S. CODE
FILE 07720-27-GR SPEC

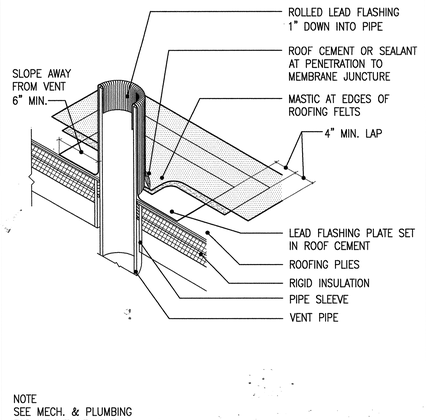

NOTE
SEE MECH. & PLUMBING FOR HEIGHT OF VENT

5 TYPICAL ROOF PENETRATION
SCALE N.T.S. CODE
FILE 07720-01-GR SPEC

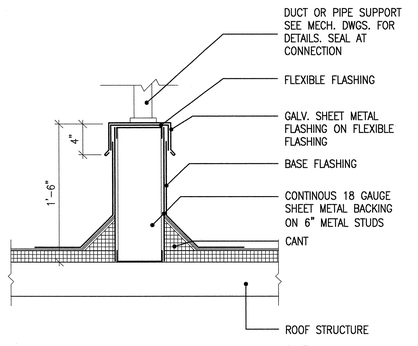

2 MECH. DUCT & PIPE SUPPORT AT DECK OPTION
SCALE 1 1/2"=1'-0" CODE
FILE 07720-33-GR SPEC
USED FOR PIPE

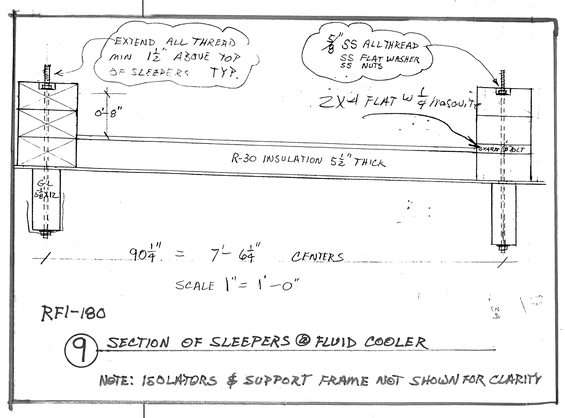

RF1-180

9 SECTION OF SLEEPERS @ FLUID COOLER

NOTE: ISOLATORS & SUPPORT FRAME NOT SHOWN FOR CLARITY

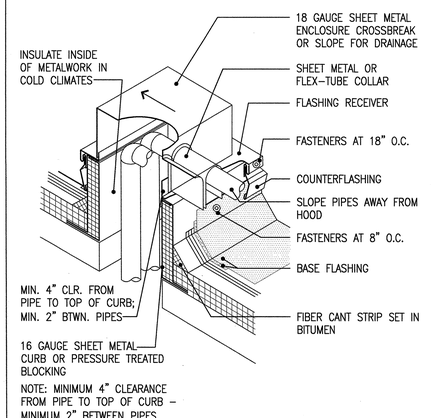

NOTE: MINIMUM 4" CLEARANCE FROM PIPE TO TOP OF CURB - MINIMUM 2" BETWEEN PIPES

6 PIPING THROUGH ROOF DECK
SCALE N.T.S. CODE
FILE 07720-23-GR SPEC

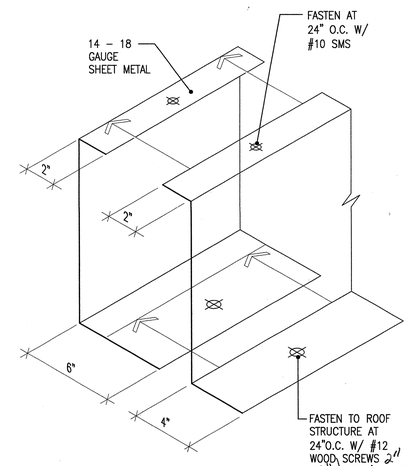

3 FORMED 14 - 18GA. METAL CURB
SCALE 3"=1'-0" CODE
FILE 07720-34-GR SPEC

APPROVAL STAMP
IDENTIFICATION STAMP
DIVISION OF THE STATE ARCHITECT
APP'D 07- 107417
ACCESS FLS PH SS NL
DATE: 12/21/05

NO.	ISSUED FOR	DATE
1	DSA APPROVAL SET	12/08/05

LICENSED ARCHITECT ROY S. LATTA No. C7256 REN. 7-31-07 STATE OF CALIFORNIA
CERTIFIED BY

K M D
KAPLAN McLAUGHLIN DIAZ
ARCHITECTURE PLANNING
222 VALLEJO SAN FRANCISCO, CA 94111
(415) 398-5191 FAX (415) 394-7158

SOLANO COMMUNITY COLLEGE

SCCD
VALLEJO CENTER
Contract # A003.6123.01.V1

PROJECT NO.	DATE
419-201	12-08-05

EXTERIOR DETAILS ROOF
AS BUILTS

A8.53

COPYRIGHT © 2004 BY KMD (KAPLAN McLAUGHLIN DIAZ). ALL RIGHTS RESERVED.

PATH: G:\000\000-000\ACAD\SHEETS\

RFI-160 & INFORMATION BULLETIN 7
CHANGE COPING CAP TO GRAVEL STOP FLASHING WHERE ROOFING TURNS UP IS LESS THAN 8" (5TH ROOF AREA

RFI-140 & 140A
CHANGES PARAPET WALL @ LOBBY & MULTI-USE

SEE RFI-015 FOR AREAS TO RECEIVE SPRAY-ON

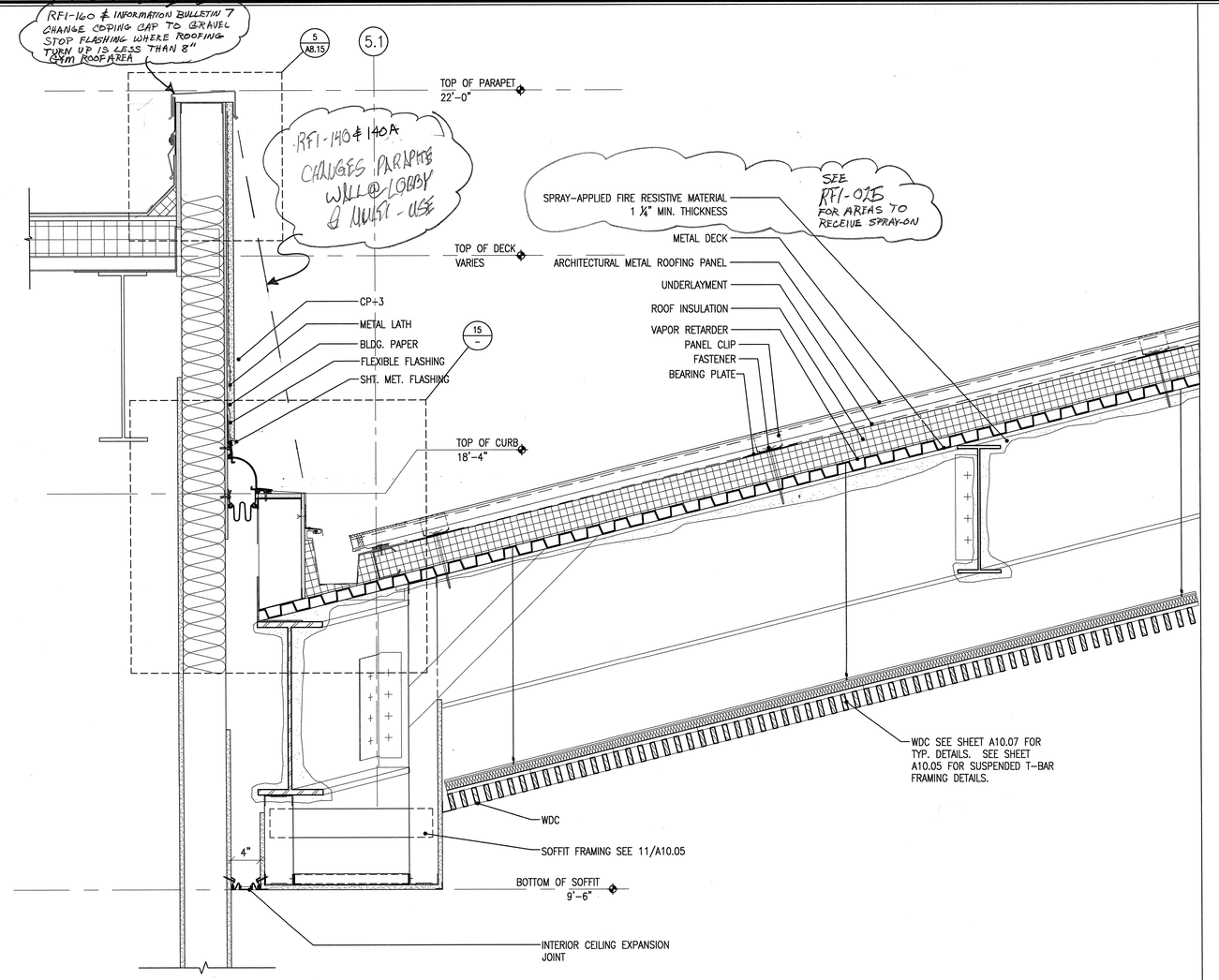

14 DETAIL SECTION @ LOBBY ROOF SEISMIC JOINT
SCALE 1 1/2" = 1'-0" CODE
FILE A-DTRF-02 SPEC
12/7/05

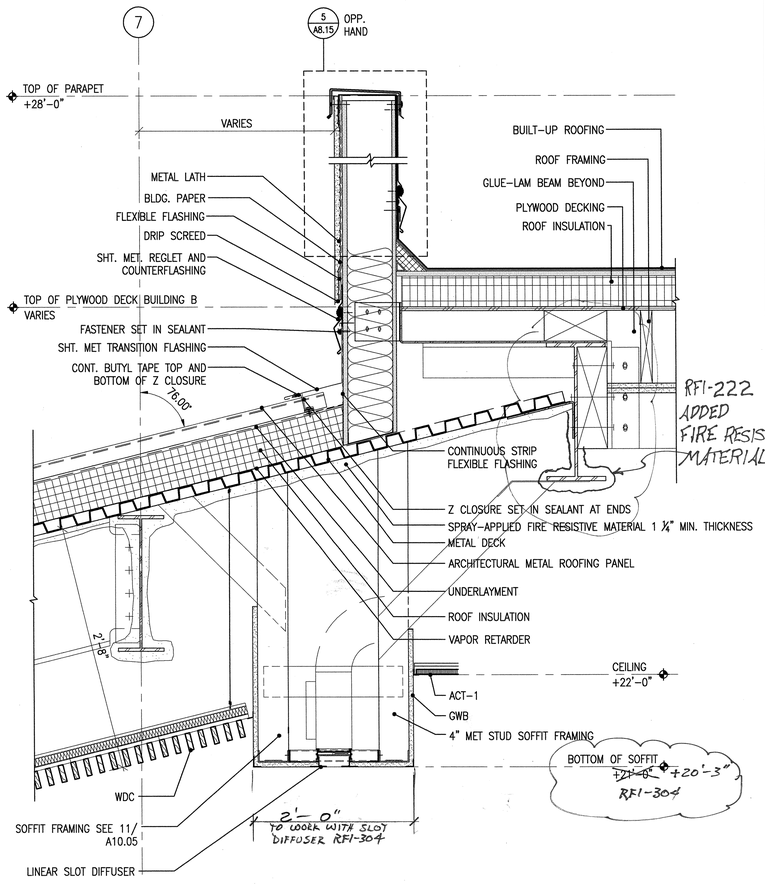

RFI-222 ADDED FIRE RESISTIVE MATERIAL

5 SECTION DETAIL @ LOBBY ROOF TO WALL JOINT
SCALE 1 1/2" = 1'-0" CODE
FILE A-DTRF-01 SPEC
12/7/05

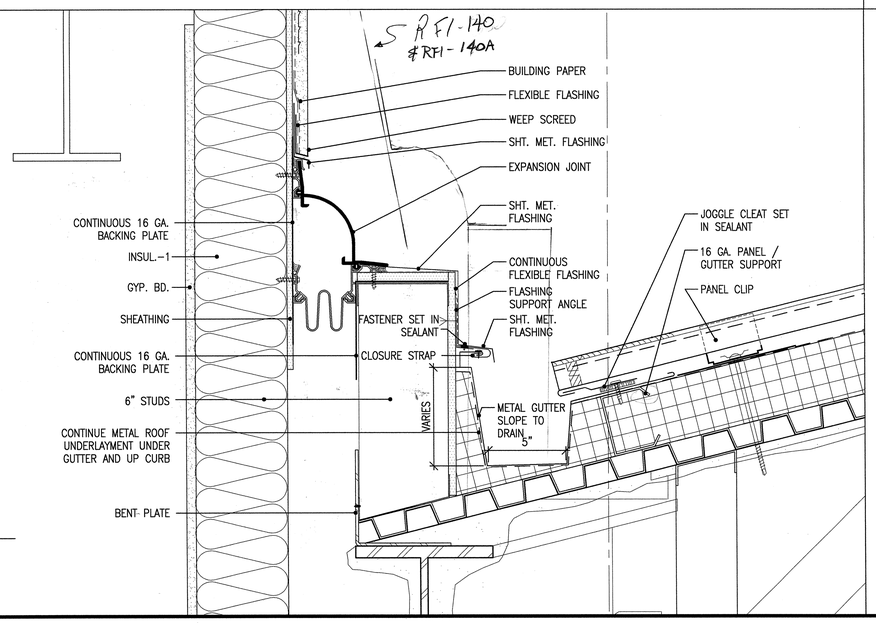

15 DETAIL SECTION ROOF GUTTER
SCALE 3" = 1'-0" CODE
FILE SPEC

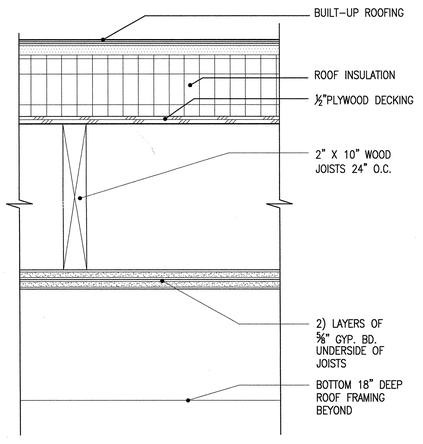

6 1-HOUR FIRE RESITIVE CEILING/ROOF ASSEM.
SCALE 3"=1'-0" CODE GA FILE NO.FC 54056
FILE A-DTRF-03 SPEC
12/7/05

APPROVAL STAMP
IDENTIFICATION STAMP
DIVISION OF THE STATE ARCHITECT
APPL. 02- 107417
AC FLS SS
DATE: 12/21/05

NO.	ISSUED FOR	DATE
1	DSA APPROVAL SET	12/08/05

LICENSED ARCHITECT ROY S. LAUKAT No. C7256 REN 7-31-07 STATE OF CALIFORNIA
CERTIFIED

K M D
KAPLAN McLAUGHLIN DIAZ
ARCHITECTURE PLANNING
222 VALLEJO SAN FRANCISCO, CA 94111
(415) 398-5191 FAX (415) 394-7158

SOLANO COMMUNITY COLLEGE

SCCD
VALLEJO CENTER
Contract # A003.6123.01.V1

PROJECT NO. 419-201
DATE 12-08-05

EXTERIOR DETAILS ROOF
AS BUILTS

A8.54

PLOT DATE:

COPYRIGHT © 2004 BY KMD (KAPLAN McLAUGHLIN DIAZ). ALL RIGHTS RESERVED.

PATH: G:\000\000-000\ACAD\SHEETS\

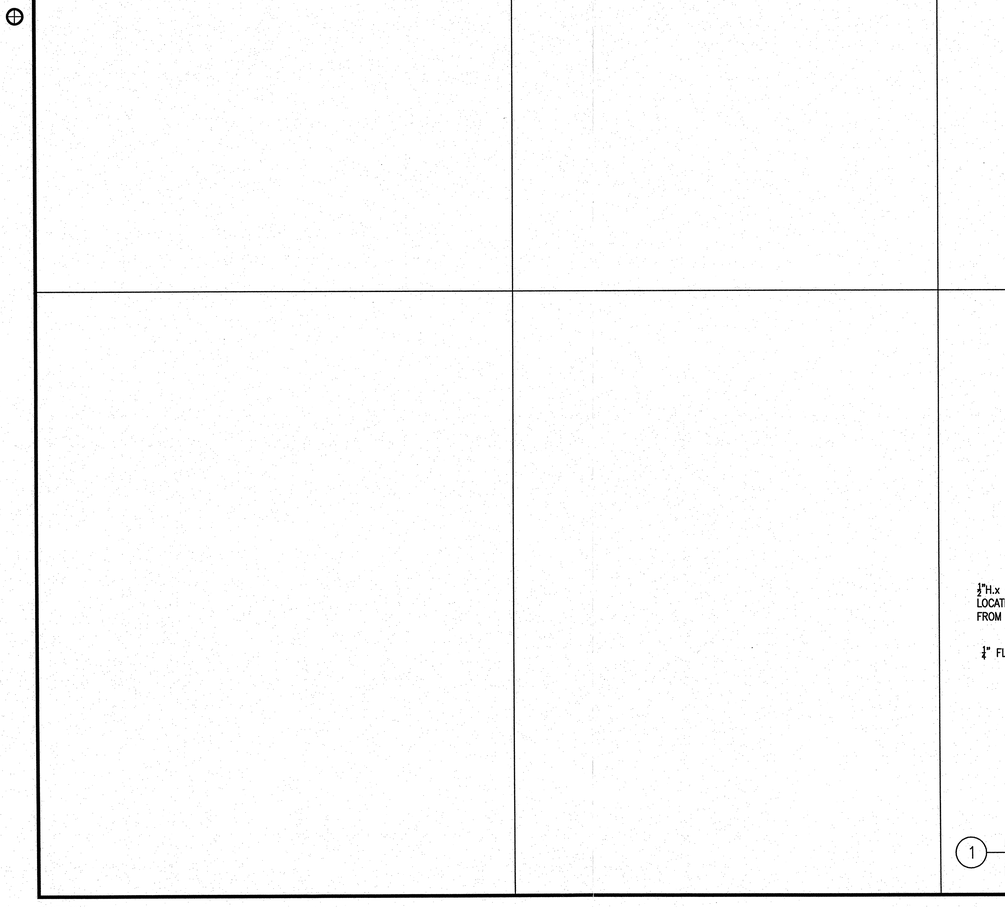

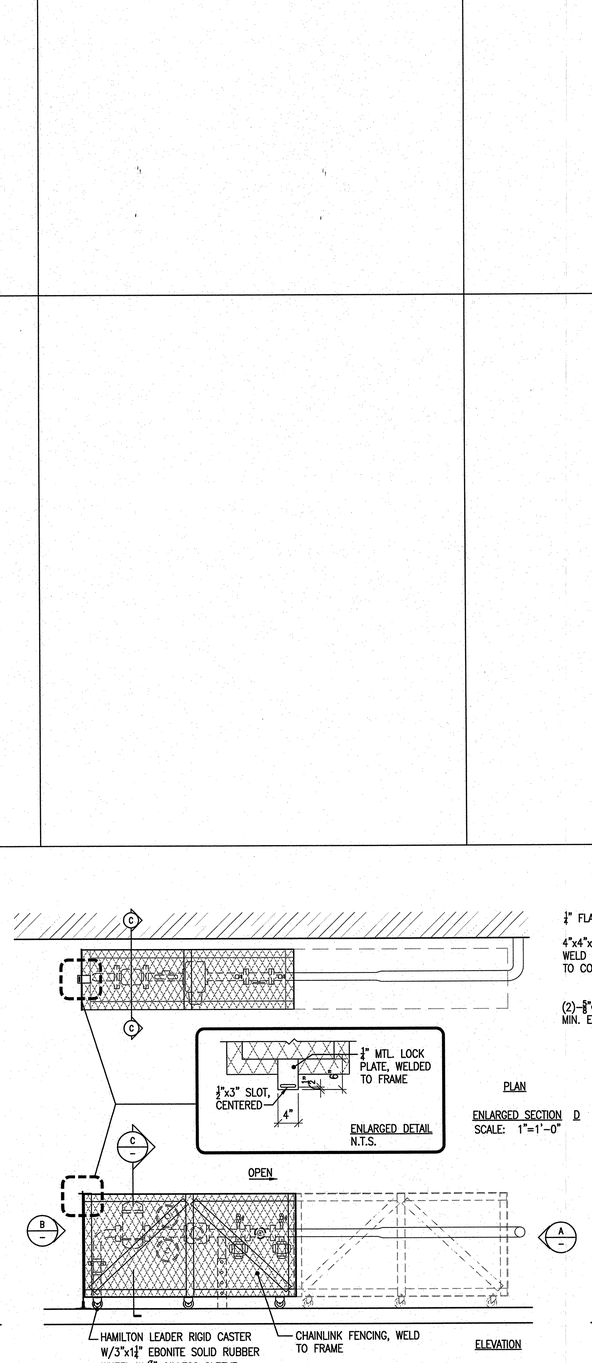

ENLARGED SECTION D
SCALE: 1"=1'-0"

ENLARGED SECTION D
SCALE: 1"=1'-0"

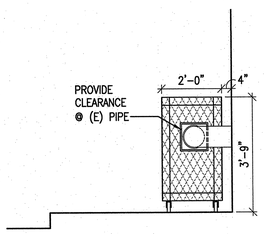

1 GAS METER CAGE
SCALE 1/2" = 1'-0" CODE
FILE mechanical-cage.dwg SPEC

APPROVAL STAMP
IDENTIFICATION STAMP
DIVISION OF THE STATE ARCHITECT
APPL 02- 107417
AC ____ FLS ____ SS ____
DATE: ____

NO.	ISSUED FOR	DATE
IB026	INFORMATION BULLETIN #25	06/14/07

LICENSED ARCHITECT ROY S. LATTA NO. C7256 REN. 7-31-07 STATE OF CALIFORNIA
CERTIFIED BY

K M D
KAPLAN McLAUGHLIN DIAZ
ARCHITECTURE PLANNING
222 VALLEJO SAN FRANCISCO, CA 94111
(415) 398-5191 FAX (415) 394-7158

SOLANO COMMUNITY COLLEGE

SCCD
VALLEJO CENTER
Contract # A003.6123.01.V1

PROJECT NO.	DATE
419-201	12-08-05

EXTERIOR DETAILS
MISCELLANEOUS

IB026
A8.55

PLOT DATE:

COPYRIGHT © 2004 BY KMD (KAPLAN McLAUGHLIN DIAZ). ALL RIGHTS RESERVED.

PATH: G:\000\000-000\ACAD\SHEETS\

3 LEGEND
SCALE NONE

ABBREVIATIONS	DESCRIPTION
ACT	ACOUSTICAL CEILING TILE
AP	ACYRLIC PANEL
AWC	ACOUSTICAL WALLCOVERING
AWP	ACOUSTICAL WALL PANEL
CONC.	CONCRETE
CPT.	CARPET
CT	CERAMIC TILE
DRAP	DRAPERY FABRIC
ES	EXPOSED STRUCTURE
FAB	FURNISHINGS FABRIC
FM	FLOOR MAT & FRAME
GT	CERAMIC TILE GROUT
GYP.	GYPSUM BOARD
PT.	PAINT
PLAM	PLASTIC LAMINATE
PLYWD.	PLYWOOD
RB	RESILIENT BASE
SWF	SPORT FLOORING
SWF-GL	SPORT FLOORING GAME LINE PAINT
SS	SOLID SURFACING
VCT	VINYL COMPOSITION TILE
WDB	WOOD BASE
WD.	WOOD PANELING
WDC	WOOD CEILING

GENERAL NOTES:

1 SEE FLOOR PLANS, CEILING PLANS AND INTERIOR ELEVATIONS FOR SPECIFIC FINISH LOCATIONS WITHIN ROOMS.

2 KEY TO FINISHES
SCALE NONE

MATERIAL	MANUFACTURER	TYPE	STYLE	COLOR #	COLOR	NOTES
ACOUSTIC CEILING TILE						
ACT-1	USG		270 ORION CLIMAPLUS		WHITE	
ACT-2	CAPAUL		TUFCORE		WHITE	
ACOUSTICAL WALLCOVERING						
AWC-1	CARNEGIE	WALLCOVERING	FLUX	F76		
AWC-2	CARNEGIE	WALLCOVERING	STRIE	6423		
ACOUSTICAL WALL PANEL						
AWP-1	FABRIK-TRACK CARNEGIE	2" ACOUSTIC	FLUX	F76		MONOACRYLIC BACKING
AWP-2	FABRIK-TRACK CARNEGIE	1" TACKABLE	FLUX	F76		
ACRYLIC PANEL						
AP-1	3 FORM		VARIA COLLECTION		BEAR GRASS	
CARPET						
CPT-1	MONTEREY CARPETS	BROADLOOM	MARABELLA II	826	MARTOS	
CERAMIC TILE						
CT-1	DALTILE	KEYSTONES	PLAIN FACE- 2"X2" FLOOR TILE- 40%	D326	DAPPLE GRAY	SHEETS COMPOSED OF "RANDOM PATTERN" IN THESE PERCENTAGES OF THESE COLORS. MATTE FINISH.
CT-2	DALTILE	KEYSTONES	PLAIN FACE- 2"X2" FLOOR & WALL TILE- 15%	D147	BUFFSTONE RANGE	
CT-3	DALTILE	KEYSTONES	PLAIN FACE- 2"X2" FLOOR TILE- 15%	D181	DORODO	
CT-4	DALTILE	KEYSTONES	PLAIN FACE- 2"X2" FLOOR TILE- 15%	D007	CINNAMON	
CT-5	DALTILE	KEYSTONES	PLAIN FACE- 2"X2" FLOOR TILE- 15%	D311	EBONY	
CT-6	DALTILE	KEYSTONES	PLAIN FACE- 4-1/4"X4-1/4"	D147	BUFFSTONE RANGE	COVED EDGES IN THE RESTROOMS
CERAMIC TILE GROUT						
GT-1	MAPEI			11	BEIGE SAHARE	USE AT FLOORS. ADD ANTI-GRAFFITI MIX.
GT-2	MAPEI			39	IVORY/MARFIL	USE AT WALLS. ADD ANTI-GRAFFITI MIX
CONCRETE						
CONC-1	EXPOSED CONCRETE		SMOOTH FINISH		NATURAL	PER SPEC 03362
CONC-2	SCOFIELD	LITHOCHROME	CHEMSTAIN	CS-15	ANTIQUE AMBER	PER SPEC 03365
CONC-3	SCOFIELD	LITHOCHROME	CHEMSTAIN	CS-12	WEATHERED BRONZE	PER SPEC 03365
CONC-4	SCOFIELD	LITHOCHROME	CHEMSTAIN	CS-16	FADED TERRACOTTA	PER SPEC 03365
CONC-5	SCOFIELD	LITHOCHROME	CHEMSTAIN	CS-14	DARK WALNUT	PER SPEC 03365
DRAPERY						
DRAP-1	DESIGNTEX	VALENTINO	6304-502		VERDIGRIS	
EXPOSED						
ES						
FLOOR MATS AND FRAMES						
FM-1	MATS INC.	FOOT GRILLES	ULTRA TRACK			ALUMINUM
FURNISHINGS						
FAB-1	PALLAS TEXTILES		MASADA	29.028.048	SCORPION	CRYPTON PROCESS FINISH / BACKING
PAINT						
PT-1	ICI			2002	BONE WHITE	BASE COLOR, TYPICAL COLOR & TYPICAL DOOR & FRAMES
PT-2	FRAZEE			8233M	CRISP KHAKI	HALLWAYS & CORRIDOR COLOR
PT-3	ICI			366	OCHRE TAN	DOOR FRAME COLOR WHEN PT-2 IS USED.
PT-4	PITTSBURGH PAINTS			350-5	COSMOPOLITAN	ACCENT COLOR
PT-5	PITTSBURGH PAINTS			350-6	BLUE OASIS	ACCENT COLOR
PT-6	PITTSBURGH PAINTS			309-5	GUACAMOLE	ACCENT COLOR
PT-7	PITTSBURGH PAINTS			309-6	MOSS POINT GREEN	ACCENT COLOR
PT-8	PITTSBURGH PAINTS			215-4	GOLD BUFF	ACCENT COLOR
PT-9	PITTSBURGH PAINTS			216-5	LION'S MANE	ACCENT COLOR
PT-10	PITTSBURGH PAINTS			434-5	HORIZON GLOW	ACCENT COLOR
PT-11	PITTSBURGH PAINTS			434-6	MESA RED	ACCENT COLOR
PT-12	PITTSBURGH PAINTS			146-7	BLUE CALICO	ACCENT COLOR
PT-13	PITTSBURGH PAINTS			146-6	VIOLETS ARE BLUE	ACCENT COLOR
PLASTIC LAMINATE						
PLAM-1	WILSONART			7909-60	FUSION MAPLE	
PLAM-2	WILSONART			4783-60	WHITE TIGRIS	
RESILIENT BASE						
RB-1	FLEXCO	ROLLED GOODS	4" CONTINUOUS	# 071	BLACK BROWN	
RB-2	FLEXCO	ROLLED GOODS	4" CONTINUOUS	# 016	BLACK BROWN	TO USE WITH VCT
SOLID SURFACING						
SS-1	WILSONART		GIBRALTAR "RICH"	9041-ML	QUARRY MELANGE	
SPORT FLOORING						
SWF	ROBBINS SPORTS FLOORING		BIO-CUSHION		WHITE MAPLE	ELITE GRADE
SWF-RVB	ROBBINS SPORTS FLOORING		4" RUBBER VENT COVE BASE		BROWN	COMPATIBLE WITH SPORT FLOORING
SWF-GL1	BONAKEMI		BONA SPORT COURTLINES FLOOR PAINT	1112	BASE LIGHT BLUE	COMPATIBLE WITH SPORT FLOORING
SWF-GL2	BONAKEMI		BONA SPORT COURTLINES FLOOR PAINT	1118	BASE DARK BLUE	COMPATIBLE WITH SPORT FLOORING
SWF-GL3	BONAKEMI		BONA SPORT COURTLINES FLOOR PAINT	1113	BASE RED	COMPATIBLE WITH SPORT FLOORING
VINYL COMPOSITION TILE						
VCT-1	MANNINGTON	ESSENTIALS		137	SAND DRIFT	RANDOM CHECKERBOARD PATTERN IN 2' X 2' TILES
VCT-2	MANNINGTON	ESSENTIALS		175	MINEARL GREY	
VCT-3	MANNINGTON	ESSENTIALS		120	PUTTY	
WOOD						
WD-1	FINISH CARPENTRY SPEC SECTION 06200	WHITE MAPLE	SOLID WOOD			CLEAR TRANSPARENT FINISH
WOOD BASE						
WDB	WOOD BASE: FINISH CARPENTRY SPEC SECTION 06200	WHITE MAPLE	SOLID WOOD			CLEAR TRANSPARENT FINISH
WOOD CEILING						
WDC-1	9 WOOD	1200 SERIES	DOWELLED GRILLE	1213-7 (V)	WHITE MAPLE	CLEAR LAQUER, SATIN SHEEN

RFI-228

1 FINISH SCHEDULE
SCALE NONE

ROOM NO.	ROOM OR SPACE NAME	FINISH: BASE	FLOOR	CEILING	WALL	WAINSCOT	MILLWORK	NOTES
FIRST FLOOR								
A-100	LOBBY	WDB	CONC 2 ,3, 4 & 5 WITH FM-1	WDC-1	PT-2 WITH PT-9 ACCENT, & AWP-2	-	PLAM-1 W/ SS-1	SEE FINISH PLANS FOR FLOOR COLORS & WALL ACCENT COLORS AND EXTENTS. SEE INTERIOR ELEVATIONS FOR AWP EXTENTS.
A-101	VENDING / COPY ALCOVE	RB-1	CONC 4	ACT-1	PT-9	-	-	
A-102	RECEPTION	RB-1 (ROOM SIDE) WDB (LOBBY	CPT-1	ACT-1 W/ GYP. SOFFIT PT-11	PT-2 WITH ACCENT WALLS	-	PLAM-1 W/ SS-1 AND AP-1, WDB	SEE FINISH PLANS FOR FLOOR COLORS, WALL ACCENT COLORS & SOFFIT COLORS AND EXTENTS.
A-103	MEN'S RESTROOM	CT-6	CT-R	GYP. BD. PT-2	PT-2	CT-2	SS-1	RFI-228
A-104	COORDINATOR'S OFFICE	RB-1	CPT-1	ACT-1	PT-1 WITH PT-2 ACCENT	-	-	SEE FINISH PLANS FOR WALL ACCENT COLORS AND EXTENTS.
A-105	WOMEN'S RESTROOM	CT-6	CT-R	GYP. BD. PT-2	PT-2	CT-2	SS-1	RFI-228
A-107	ELEV. MACHINE ROOM	RB-1	CONC-1	ES	PT-1	-	-	
A-108	COUNSELLING OFFICE	RB-1	CPT-1	ACT-1	PT-1 WITH PT-2 ACCENT	-	-	SEE FINISH PLANS FOR WALL ACCENT COLORS AND EXTENTS.
A-109	BULK STORAGE	RB-1	CONC-1	ACT-1	PT-1	-	-	
A-110	HALLWAY	RB-1	CONC 3 & 4	ACT-2	PT-2 / PT-12	-	-	SEE FINISH PLANS FOR FLOOR COLORS & WALL ACCENT COLORS AND EXTENTS.
A-111	MAIN ELECTRICAL ROOM	RB-1	CONC-1	ES	PT-1	-	-	
A-112	FINANCIAL AID OFFICE	RB-1	CPT-1	ACT-1	PT-1 WITH PT-2 ACCENT	-	-	SEE FINISH PLANS FOR WALL ACCENT COLORS AND EXTENTS.
A-113	MECHANICAL ROOM	RB-1	CONC-1	ES	PT-1	-	-	
A-114	HEALTH ROOM	RB-2	VCT 1, 2 & 3	ACT-1	PT-1 WITH PT-2 ACCENT	-	PLAM-1 W/ SS-1	SEE FINISH PLANS FOR WALL ACCENT COLORS AND EXTENTS.
A-117	MEDIA STORAGE	RB-1	CONC-1	ACT-1	PT-1	-	-	
A-119	JANITOR'S CLOSET	RB-1	CONC-1	GYP. BD. PT-1	PT-1	-	-	
A-120	HALLWAY	RB-1	CONC 2 ,3, 4 & 5	ACT-2 WITH GYP. SOFFIT ACCENTS	PT-2 WITH ACCENT WALLS, & AWC-1	-	-	SEE FINISH PLANS FOR FLOOR COLORS, WALL ACCENT COLORS & SOFFIT COLORS AND EXTENTS. SEE INTERIOR ELEVATIONS FOR AWC EXTENTS.
A-121	CLASSROOM	RB-1	CPT-1	ACT-1	PT-1	-	-	
A-122	CLASSROOM	RB-1	CPT-1	ACT-1	PT-1	-	-	
A-123	CLASSROOM	RB-1	CPT-1	ACT-1	PT-1	-	-	
A-124	LEARNING LAB	RB-1	CPT-1	ACT-1	PT-1	-	-	
A-124A	GROUP STUDY	RB-1	CPT-1	ACT-1	PT-1	-	-	
A-124B	GROUP STUDY	RB-1	CPT-1	ACT-1	PT-1	-	-	
A-124C	GROUP STUDY	RB-1	CPT-1	ACT-1	PT-1	-	-	
A-125	COMPUTER LAB	RB-1	CPT-1	ACT-1	PT-1	-	-	
A-127	TECH OFFICE/AV STOR	RB-1	CPT-1	ACT-1	PT-1	-	-	
A-127A	SERVER ROOM	RB-1	CONC-1	ACT-1	PT-1	-	-	
A-129	COMPUTER LAB	RB-1	CPT-1	ACT-1	PT-1	-	-	
A-130	STUDY AREA	RB-1	CONC 2 ,3 4 & 5	ACT-2 WITH GYP. SOFFIT PT-8	PT-2 WITH ACCENT WALLS	-	-	SEE FINISH PLANS FOR FLOOR COLORS, WALL ACCENT COLORS & SOFFIT COLORS AND EXTENTS.
	STAIR #1	RB-1	CONC 4	ACT-2	PT-2 / PT-11	-	-	PAINT STEEL STAIRS PT-9 "LIONS MANE" PER EMAIL 7-2-07
	STAIR #2	RB-1	CONC-1	GYP. BD. PT-1	PT-1	-	-	PAINT STEEL STAIRS PT-12 PER EMAIL 4-20-07
	ELEVATOR				PLAM-1			
B-100	GALLERY	WDB	CONC 2 ,3 & 4 WITH FM-1	ACT-2	PT-2 WITH AWC-1	-	-	SEE FINISH PLANS FOR FLOOR COLORS & WALL ACCENT COLORS AND EXTENTS. SEE INTERIOR ELEVATIONS FOR AWC EXTENTS.
B-101	MULTI-PURPOSE ROOM	SWF-RVB	SWF WITH SWF GL1, 2 & 3 ACCENTS	ACT-1 WITH GYP. BD. PT-1	PT-1 WITH PT-2 /AWC-2 EAST WALL	-	WD-1	SEE FINISH PLANS FOR FLOOR COLORS, WALL ACCENT COLORS & SOFFIT COLORS AND EXTENTS. SEE INTERIOR ELEVATIONS FOR AWC EXTENTS.
B-101A	YOUTH STORAGE ROOM	RB-1	CONC-1	ACT-1	PT-1	-	-	
B-102	DATA ROOM	RB-1	CONC-1	ES	PT-1	-	-	
B-103	ART / ECE ROOM	RB-2	VCT 1, 2 & 3	ACT-1	PT-1 WITH PT-2/AWP-2 WEST WALL	-	PLAM-1 W/ SS-1	SEE INTERIOR ELEVATIONS FOR AWP & WALL ACCENT COLORS AND EXTENTS.
B-103A	ART STORAGE	RB-2	VCT-1	ACT-1	PT-1	-	-	
B-104	FURNITURE STORAGE ROOM	RB-1	CONC-1	ACT-1	PT-1	-	-	
B-105	LANDSCAPE MAINTENANCE	-	CONC-1	ES	ES	-	-	
B-106	LECTURE HALL	RB-1	CPT-1	WDC-1 / GYP. BD. PT-1	PT-2/AWP-1 WITH PT-11 WEST WALL	-	PLAM-1 PANELS AT SLIDING MKBDS.	SEE INTERIOR ELEVS FOR PLAM, WALL ACCENT AND AWP EXTENTS AND LOCATIONS. FAB-1 FOR FIXED AND MOVEABLE FURNISHINGS.
B-106A	PROJECTION ROOM	RB-1	CPT-1	ACT-1	PT-1	-	PLAM-1 W/ PLAM-2 CNTRTOP	
B-108	ELEC. ROOM	RB-1	CONC-1	ES	PT-1	-	-	
B-110	HALLWAY	WD-1	CONC-4	GYP.BD. PT-1	PT-2	-	-	
B-112	MEN'S RESTROOM	CT-6	CT-R	GYP.BD. PT-2	PT-2	CT-2	SS-1	RFI-228
B-114	WOMEN'S RESTROOM	CT-6	CT-R	GYP. BD. PT-2	PT-2	CT-2	SS-1	RFI-228
SECOND FLOOR								
A-200	LOBBY	RB-1	CONC 3 & 4	ACT-2	PT-5, 9 & 10	-	-	SEE FINISH PLANS FOR FLOOR COLORS & WALL ACCENT COLORS AND EXTENTS.
A-202	STAFF LOUNGE	RB-2	VCT 1, [illegible] & 3 W/ CPT-1	ACT-1	PT-2 WITH PT-8 ACCENT	-	PLAM-1 W/ SS-1	RFI-261 SEE A9.06 FOR LOCATION OF MATERIALS
A-203	MEN'S RESTROOM	CT-6	CT-R	GYP. BD. PT-2	PT-2	CT-2	SS-1	RFI-228
A-204	MEETING ROOM	RB-1	CPT-1 WITH CONC-2 AT ENTRY	ACT-1/ GYP. BD. PT-1	PT-2	-	PLAM-1 W/ PLAM-2 CNTRTOP	SEE FINISH PLANS FOR FLOOR COLORS.
A-205	WOMEN'S RESTROOM	CT-6	CT-R	GYP. BD. PT-2	PT-2	CT-2	SS-1	RFI-228
A-206	JANITOR'S CLOSET	RB-1	CONC-1	GYP. BD. PT-1	PT-1	-	-	
A-207	SCIENCE LAB	RB-1	CONC 2 ,3 & 4	ACT-1	PT-1	-	SEE SPEC. SECTION 12345	SEE FINISH PLANS FOR FLOOR COLORS AND EXTENTS.
A-208	ANTE ROOM	RB-1	CONC 2 ,3 & 4	ACT-2	PT-1	-	-	
A-209	SCIENCE PREP ROOM	RB-1	CONC 2 ,3 & 4	ACT-1	PT-1	-	SEE SPEC. SECTION 12345	SEE FINISH PLANS FOR FLOOR COLORS AND EXTENTS.
A-210	CORRIDOR	RB-1	CONC 2 ,3 & 4	ACT-2 WITH GYP. SOFFIT ACCENTS	PT-2 WITH ACCENTS, & AWC-1	-	-	SEE FINISH PLANS FOR FLOOR COLORS, WALL ACCENT COLORS & SOFFIT COLORS AND EXTENTS. SEE INTERIOR ELEVATIONS FOR AWC EXTENTS.
A-211	SCIENCE LAB	RB-1	CONC 2 ,3 & 4	ACT-1	PT-1	-	SEE SPEC. SECTION 12345	SEE FINISH PLANS FOR FLOOR COLORS AND EXTENTS.
A-212	OFFICE	RB-1	CPT-1	ACT-1	PT-1 WITH PT-2 ACCENT	-	-	SEE FINISH PLANS FOR WALL ACCENT COLORS AND EXTENTS.
A-213	CLASSROOM	RB-1	CPT-1	ACT-1	PT-1	-	-	
A-214	ELEC ROOM	RB-1	CONC-1	ES	PT-1	-	-	
A-215	CLASSROOM	RB-1	CPT-1	ACT-1	PT-1	-	-	
A-216	OFFICE	RB-1	CPT-1	ACT-1	PT-1 WITH PT-2 ACCENT	-	-	SEE FINISH PLANS FOR WALL ACCENT COLORS AND EXTENTS.
A-217	CLASSROOM	RB-1	CPT-1	ACT-1	PT-1	-	-	
A-218	OFFICE	RB-1	CPT-1	ACT-1	PT-1 WITH PT-2 ACCENT	-	-	SEE FINISH PLANS FOR WALL ACCENT COLORS AND EXTENTS.
A-220	STORAGE	RB-1	CPT-1	ACT-1	PT-1 WITH PT-2 ACCENT	-	-	SEE FINISH PLANS FOR WALL ACCENT COLORS AND EXTENTS.
A-222	OFFICE	RB-1	CPT-1	ACT-1	PT-1 WITH PT-2 ACCENT	-	-	SEE FINISH PLANS FOR WALL ACCENT COLORS AND EXTENTS.
A-224	OFFICE	RB-1	CPT-1	ACT-1	PT-1 WITH PT-2 ACCENT	-	-	SEE FINISH PLANS FOR WALL ACCENT COLORS AND EXTENTS.
A-225	HALLWAY	RB-1	CONC 2 ,3 & 4	ACT-2	PT-1	-	-	
A-226	OFFICE	RB-1	CPT-1	ACT-1	PT-1 WITH PT-2 ACCENT	-	-	SEE FINISH PLANS FOR WALL ACCENT COLORS AND EXTENTS.
A-228	STAFF TOILET	CT-6	CT-R	GYP. BD. PT-1	PT-2	CT-2	-	RFI-228
A-230	OFFICE	RB-1	CPT-1	ACT-1	PT-1 WITH PT-2 ACCENT	-	-	SEE FINISH PLANS FOR WALL ACCENT COLORS AND EXTENTS.
A-232	COPY/WORK ALCOVE	RB-1	CONC 2 ,3 & 4	ACT-2	PT-1	-	PLAM-1 W/ PLAM-3 CNTRTOP	
A-234	OFFICE	RB-1	CPT-1	ACT-1	PT-1 WITH PT-2 ACCENT	-	-	SEE FINISH PLANS FOR WALL ACCENT COLORS AND EXTENTS.
A-240	DATA ROOM	RB-1	CONC-1	ACT-1	PT-1	-	-	
A-242	CLASSROOM	RB-1	CPT-1	ACT-1	PT-1	-	-	
	STUDY AREA	RB-1	CONC 2 ,3 4 & 5	ACT-2 / GYP. SOFFIT PT-8	PT-2 WITH ACCENT WALLS	-	-	SEE FINISH PLANS FOR FLOOR COLORS, WALL ACCENT COLORS & SOFFIT COLORS AND EXTENTS.

Copy sent by email to: Koreen Bros. onn 4/5/07

Ralph Larsen & Son, Inc.
General Contractors License No. 189341
300 8th Avenue
San Mateo, CA 94401-4221
Phone (650) 579-0339
Fax (650) 579-0349

Request for Information 276

Detailed, RFIs Grouped by RFI Number

Second reply received on 4/5/07

Vallejo Center for Solano Community College Dist
Northgate Business Park
545 Columbus Parkway
Vallejo, CA 94591

Project # 2604
Tel: (707) 649-8327 Fax: (707) 553-9728

Ralph Larsen & Son, Inc.

RFI #: 276 Date Created: 3/20/2007

Answer Company | Answered By | Author Company: Ralph Larsen & Son, Inc., 300 8th Avenue, San Mateo, CA 94401 | Authored By: Jay Tucker

Co-Respondent | Author RFI Number

Subject: Paint colors on hollow metal door & window frames unclear. | Discipline | Category

Cc: Company Name | Contact Name | Copies | Notes

Question | Date Required: 4/1/2007

We have not been able to determine the paint color wanted on all of the hollow metal door and window frames. Many of the doors are pre finished wood, however there are several hollow metal doors that we can not confirm the paint color wanted. The Architectural A9..01 through A9.12 does show several different colors on different hollow metal frames. We need to know what color is wanted on each of the Hollow Metal window and door frames and con not confirm what color is wanted. The Drawings do show paint colors for the hallway side of the hollow metal door frames, but the plans are unclear on weather the room side of these frames is a different color than show in the hallway.
1. Will you provide a list of each door frame and paint color wanted on each one?
2. Will you provide a list of each hollow metal window frame and the paint color wanted on each one?
3. Will you provide a list of each hollow metal door and the paint color wanted for each door?

Suggestion
1. No
2. No
3. No
Unless otherwise noted, all doors and frame colors to be PT-1.
Unless otherwise noted, at wood doors, frames to be PT-1.
Melanie Kung/KMD

Response Clarification:
INTERIOR DOORS: All INTERIOR doors are to be painted PT-1 unless otherwise noted in the A9 drawings. Accent colors noted shall refer to only the specified side of the door and frame. Dual color doors and frames are to be painted as shown on attached sketch.

EXTERIOR DOORS: All EXTERIOR doors are to be painted as noted per the exterior elevations in the A5 drawings. For doors not specifically called out, door and frame color to match exterior elevation color adjacent to door. Interior color to be PT-1 or as noted on A9 drawings.

Melanie Kung/KMD - 04/05/07

Subject RFI-276
Paint colors on hollow metal door & window frames unclear.
Unless otherwise noted, all doors and frame colors to be PT-1.
Unless otherwise noted, at wood doors, frames to be PT-1.
Melanie Kung/KMD
Response Clarification:
INTERIOR DOORS: All INTERIOR doors are to be painted PT-1 unless otherwise noted in the A9 drawings. Accent colors noted shall refer to only the specified side of the door and frame. Dual color doors and frames are to be painted as shown on attached sketch.
EXTERIOR DOORS: All EXTERIOR doors are to be painted as noted per the exterior elevations in the A5 drawings. For doors not specifically called out, door and frame color to match exterior elevation color adjacent to door. Interior color to be PT-1 or as noted on A9 drawings.
Melanie Kung/KMD - 04/05/07

APPROVAL STAMP
IDENTIFICATION STAMP
DIVISION OF THE STATE ARCHITECT
APPL 02- 107417
AC FLS TH SS
DATE: 12/21/05

NO.	ISSUED FOR	DATE
1	DSA APPROVAL SET	12/08/05

LICENSED ARCHITECT ROY S. LATKA NO. C7256 REN 7-31-07 STATE OF CALIFORNIA
CERTIFIED BY

K M D
KAPLAN McLAUGHLIN DIAZ
ARCHITECTURE PLANNING
222 VALLEJO SAN FRANCISCO, CA 94111
(415) 398-5191 FAX (415) 394-7158

SOLANO COMMUNITY COLLEGE

SCCD
VALLEJO CENTER
Contract # A003.6123.01.V1

PROJECT NO. 419-201 | DATE 12-08-05

FINISH SCHEDULE
AS BUILTS

A9.00

PLOT DATE:

COPYRIGHT © 2004 BY KMD (KAPLAN McLAUGHLIN DIAZ). ALL RIGHTS RESERVED.

PATH: G:\000\000-000\ACAD\SHEETS\

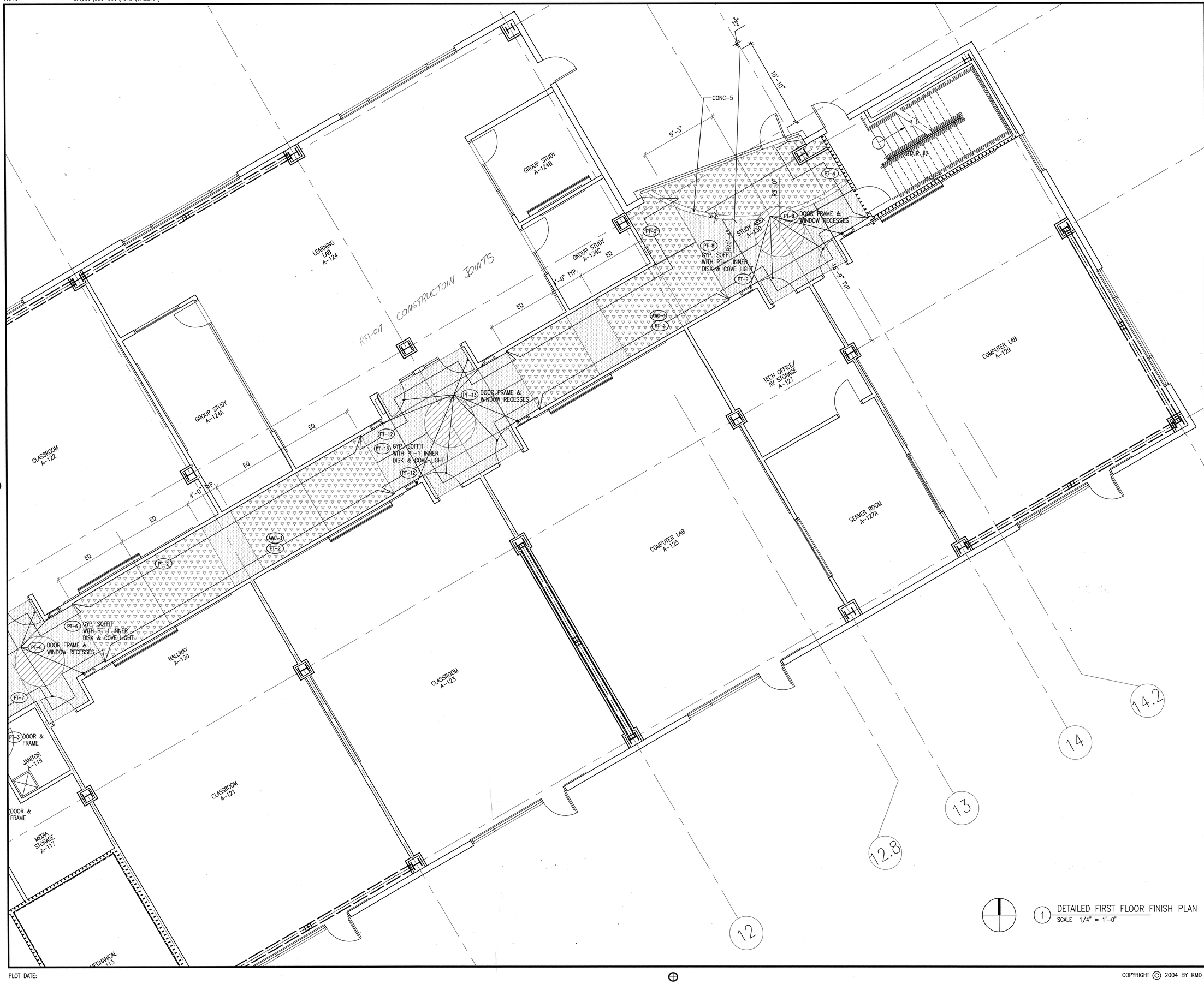

1 DETAILED FIRST FLOOR FINISH PLAN
SCALE 1/4" = 1'-0"

MATERIAL LEGEND

- CONC-2
- CONC-3
- CONC-4
- CONC-5
- (PT-) PAINT COLOR – SEE FINISH SCHEDULE
- (AWC-) ACOUSTICAL WALL COVERING – SEE FINISH SCHEDULE
- (AWP-) ACOUSTICAL WALL PANEL – SEE FINISH SCHEDULE

SHEET NOTES

1. SEE FINISH SCHEDULE, INTERIOR ELEVATIONS AND RCPS FOR FURTHER CLARIFICATIONS.
2. SEE DETAIL 3/A9.11 FOR COLOR COORDINATION AT TYPICAL ROOM ENTRIES AT BUILDING A.
3. UNLESS OTHERWISE INDICATED FINISH FLOOR JOINTS & COLOR CHANGES AND PAINT COLOR TRANSITIONS START AT PARTITION CORNERS.

APPROVAL STAMP
IDENTIFICATION STAMP
DIVISION OF THE STATE ARCHITECT
APPL. 02- 107417
AC FLS. TH SS NC
DATE: 12/21/05

NO.	ISSUED FOR	DATE
1	DSA APPROVAL SET	12/08/05

LICENSED ARCHITECT ROY S. LAUER NO. C7256 REN. 7-31-07 STATE OF CALIFORNIA
CERTIFIED INSPECTOR

K M D
KAPLAN McLAUGHLIN DIAZ
ARCHITECTURE PLANNING
222 VALLEJO SAN FRANCISCO, CA 94111
(415) 398-5191 FAX (415) 394-7158

SOLANO COMMUNITY COLLEGE

SCCD
VALLEJO CENTER
Contract # A003.6123.01.V1

PROJECT NO.	DATE
419-201	12-08-05

DETAILED FIRST FLOOR FINISH PLAN
AS BUILTS

A9.01

PLOT DATE:

COPYRIGHT © 2004 BY KMD (KAPLAN McLAUGHLIN DIAZ). ALL RIGHTS RESERVED.

PATH: G:\000\000-000\ACAD\SHEETS\

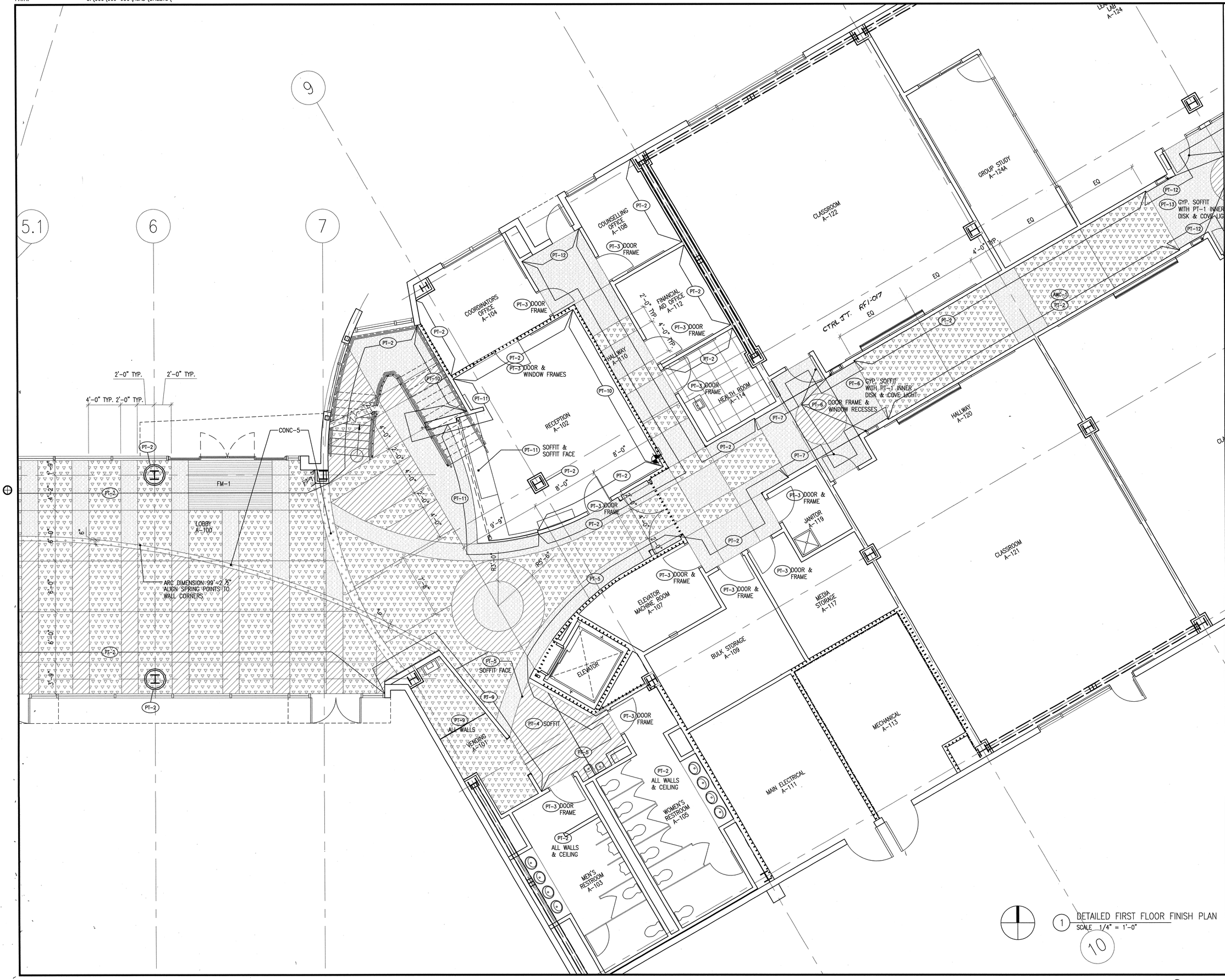

1 DETAILED FIRST FLOOR FINISH PLAN
SCALE 1/4" = 1'-0"

10

MATERIAL LEGEND

- CONC-2
- CONC-3
- CONC-4
- CONC-5
- (PT-) PAINT COLOR – SEE FINISH SCHEDULE
- (AWC-) ACOUSTICAL WALL COVERING – SEE FINISH SCHEDULE
- (AWP-) ACOUSTICAL WALL PANEL – SEE FINISH SCHEDULE

SHEET NOTES

1. SEE FINISH SCHEDULE, INTERIOR ELEVATIONS AND RCPS FOR FURTHER CLARIFICATIONS.
2. SEE DETAIL 3/A9.11 FOR COLOR COORDINATION AT TYPICAL ROOM ENTRIES AT BUILDING A.
3. UNLESS OTHERWISE INDICATED FINISH FLOOR JOINTS & COLOR CHANGES AND PAINT COLOR TRANSITIONS START AT PARTITION CORNERS.

APPROVAL STAMP
IDENTIFICATION STAMP
DIVISION OF THE STATE ARCHITECT
APPL 02- 107417
AC FLS PH SS MC
DATE: 12/21/05

NO.	ISSUED FOR	DATE
1	DSA APPROVAL SET	12/08/05

LICENSED ARCHITECT
ROY S. LUNA
No. C7256
REN. 7-31-07
STATE OF CALIFORNIA
CERTIFIED BY

K M D
KAPLAN McLAUGHLIN DIAZ
ARCHITECTURE PLANNING
222 VALLEJO SAN FRANCISCO, CA 94111
(415) 398-5191 FAX (415) 394-7158

SOLANO COMMUNITY COLLEGE

SCCD
VALLEJO CENTER
Contract # A003.6123.01.V1

PROJECT NO.	DATE
419-201	12-08-05

DETAILED FIRST FLOOR FINISH PLAN
AS BUILTS

A9.02

PLOT DATE:

COPYRIGHT © 2004 BY KMD (KAPLAN McLAUGHLIN DIAZ). ALL RIGHTS RESERVED.

PATH: G:\000\000-000\ACAD\SHEETS\

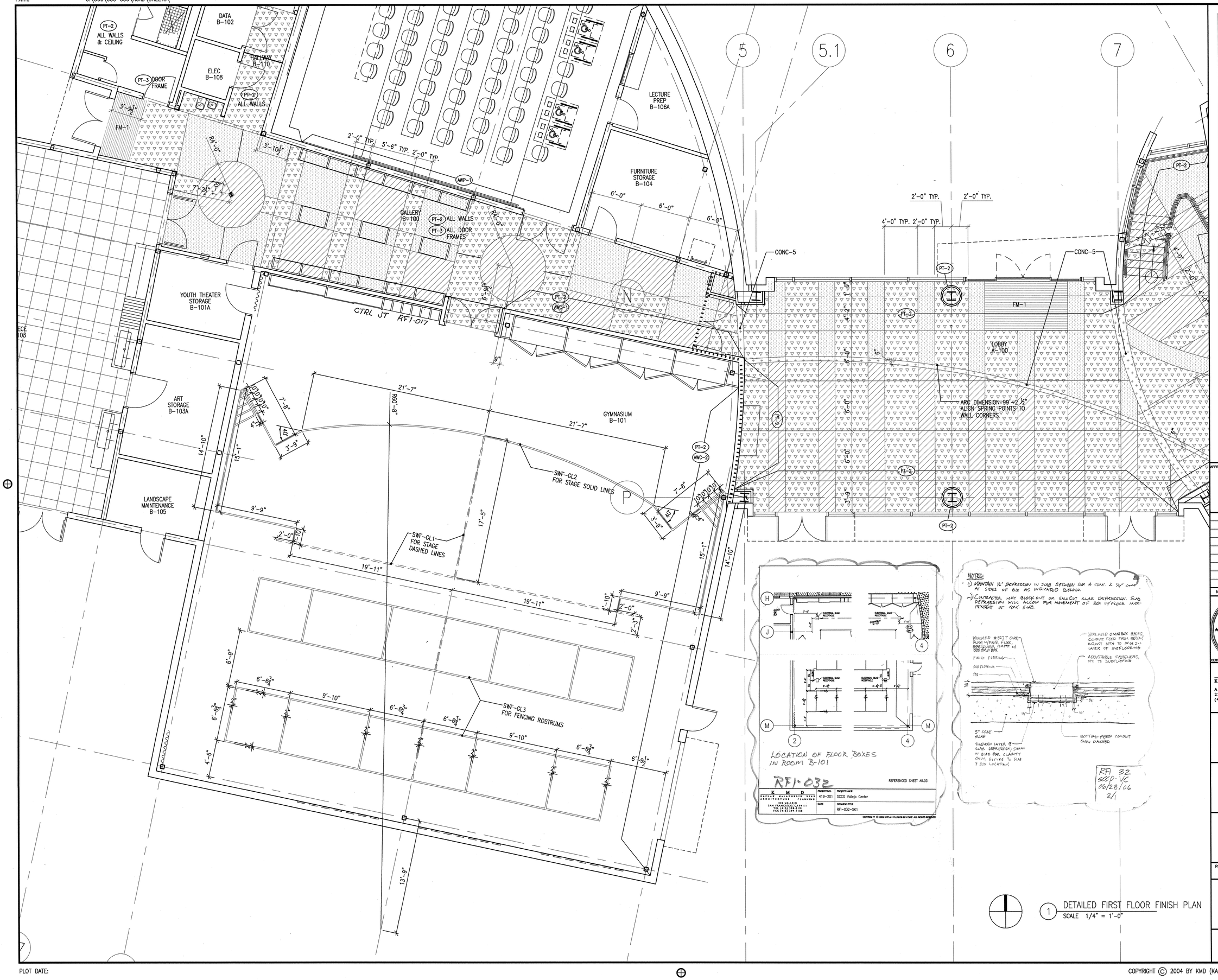

1 DETAILED FIRST FLOOR FINISH PLAN
SCALE 1/4" = 1'-0"

MATERIAL LEGEND

- CONC-2
- CONC-3
- CONC-4
- CONC-5
- PT- PAINT COLOR – SEE FINISH SCHEDULE
- AWC- ACOUSTICAL WALL COVERING – SEE FINISH SCHEDULE
- AWP- ACOUSTICAL WALL PANEL – SEE FINISH SCHEDULE

SHEET NOTES

1. SEE FINISH SCHEDULE, INTERIOR ELEVATIONS AND RCPS FOR FURTHER CLARIFICATIONS.
2. SEE DETAIL 3/A9.11 FOR COLOR COORDINATION AT TYPICAL ROOM ENTRIES AT BUILDING A.
3. UNLESS OTHERWISE INDICATED FINISH FLOOR JOINTS & COLOR CHANGES AND PAINT COLOR TRANSITIONS START AT PARTITION CORNERS.

APPROVAL STAMP
IDENTIFICATION STAMP
DIVISION OF THE STATE ARCHITECT
APPL 02- 107417
AC FLS SS
DATE: 12/21/05

NO.	ISSUED FOR	DATE
1	DSA APPROVAL SET	12/08/05

LICENSED ARCHITECT ROY S. LAMKA NO. C7256 REN. 7-31-07 STATE OF CALIFORNIA
CERTIFIED BY:

K M D
KAPLAN McLAUGHLIN DIAZ
ARCHITECTURE PLANNING
222 VALLEJO SAN FRANCISCO, CA 94111
(415) 398-5191 FAX (415) 394-7158

SOLANO COMMUNITY COLLEGE

SCCD
VALLEJO CENTER
Contract # A003.6123.01.V1

PROJECT NO. 419-201
DATE 12-08-05

DETAILED FIRST FLOOR FINISH PLAN
AS BUILTS

A9.03

PLOT DATE:

COPYRIGHT © 2004 BY KMD (KAPLAN McLAUGHLIN DIAZ). ALL RIGHTS RESERVED.

PATH: G:\000\000-000\ACAD\SHEETS\

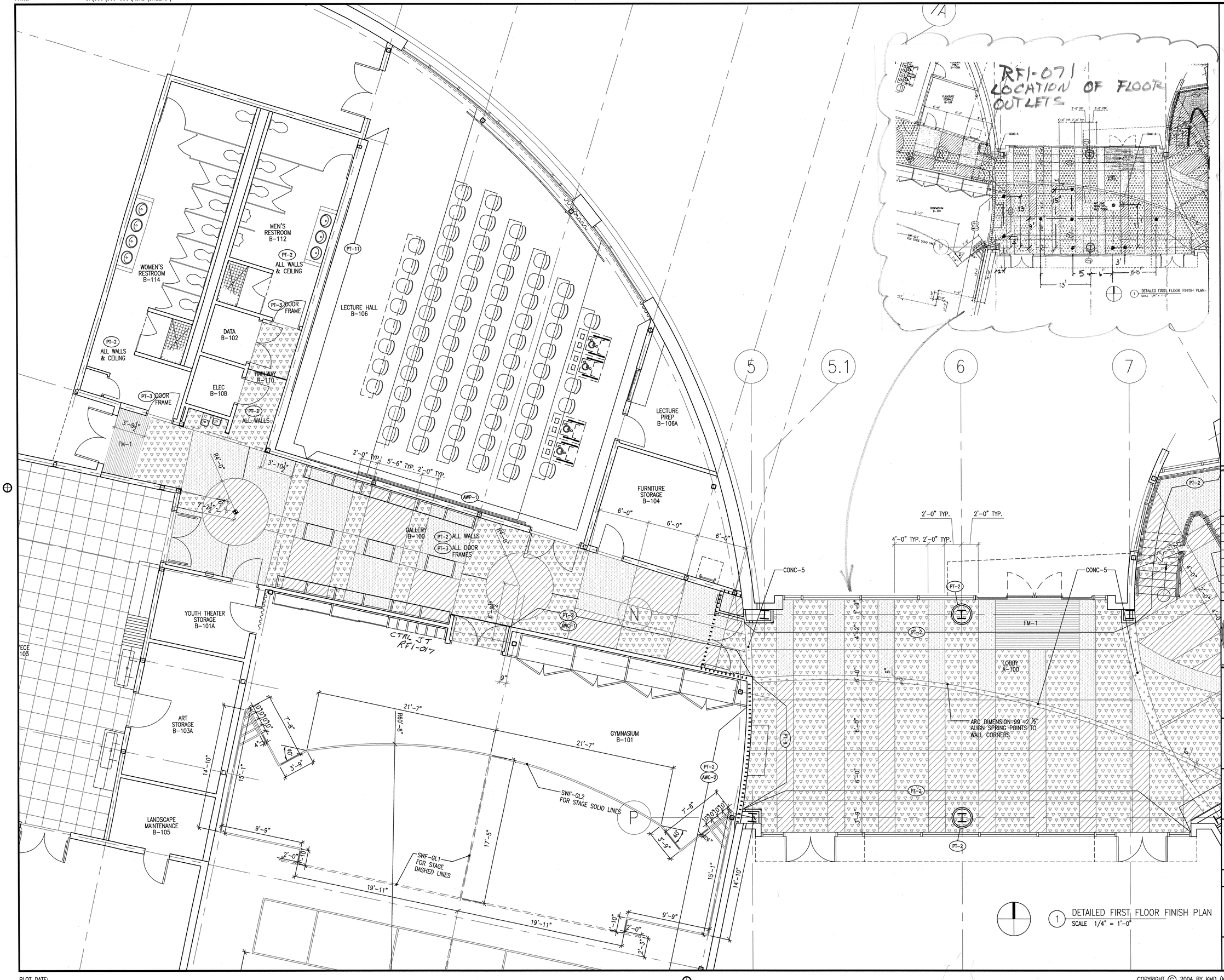

MATERIAL LEGEND

- CONC-2
- CONC-3
- CONC-4
- CONC-5
- (PT-) PAINT COLOR – SEE FINISH SCHEDULE
- (AWC-) ACOUSTICAL WALL COVERING – SEE FINISH SCHEDULE
- (AWP-) ACOUSTICAL WALL PANEL – SEE FINISH SCHEDULE

SHEET NOTES

1. SEE FINISH SCHEDULE, INTERIOR ELEVATIONS AND RCPS FOR FURTHER CLARIFICATIONS.

2. SEE DETAIL 3/A9.11 FOR COLOR COORDINATION AT TYPICAL ROOM ENTRIES AT BUILDING A.

3. UNLESS OTHERWISE INDICATED FINISH FLOOR JOINTS & COLOR CHANGES AND PAINT COLOR TRANSITIONS START AT PARTITION CORNERS.

APPROVAL STAMP — IDENTIFICATION STAMP
DIVISION OF THE STATE ARCHITECT
APPL. 08- 107417
AC FLS SS
DATE: 12/21/05

NO.	ISSUED FOR	DATE
1	DSA APPROVAL SET	12/08/05

LICENSED ARCHITECT ROY S. LAZZO NO. C7256 REN. 7-31-08 STATE OF CALIFORNIA
CERTIFIED BY

K M D
KAPLAN McLAUGHLIN DIAZ
ARCHITECTURE PLANNING
222 VALLEJO SAN FRANCISCO, CA 94111
(415) 398-5191 FAX (415) 394-7158

SOLANO COMMUNITY COLLEGE

SCCD
VALLEJO CENTER
Contract # A003.6123.01.V1

PROJECT NO.	DATE
419-201	12-08-05

DETAILED FIRST FLOOR FINISH PLAN AS BUILTS

A9.04

PLOT DATE:

COPYRIGHT © 2004 BY KMD (KAPLAN McLAUGHLIN DIAZ). ALL RIGHTS RESERVED.

PATH: G:\000\000-000\ACAD\SHEETS\

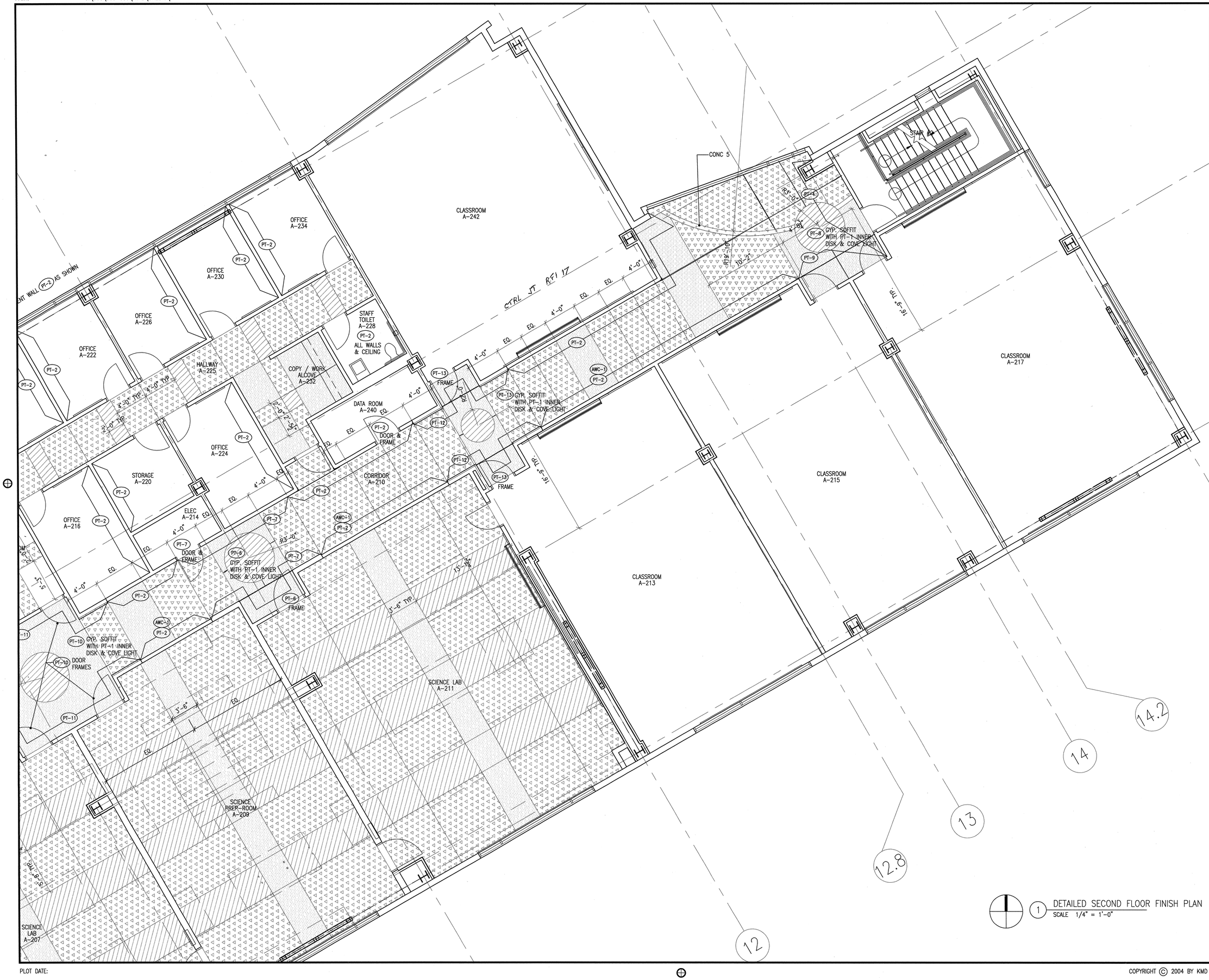

1 DETAILED SECOND FLOOR FINISH PLAN
SCALE 1/4" = 1'-0"

MATERIAL LEGEND

- CONC-2
- CONC-3
- CONC-4
- CONC-5
- (PT-) PAINT COLOR – SEE FINISH SCHEDULE
- (AWC-) ACOUSTICAL WALL COVERING – SEE FINISH SCHEDULE
- (AWP-) ACOUSTICAL WALL PANEL – SEE FINISH SCHEDULE

SHEET NOTES

1. SEE FINISH SCHEDULE, INTERIOR ELEVATIONS AND RCPS FOR FURTHER CLARIFICATIONS.
2. SEE DETAIL 3/A9.11 FOR COLOR COORDINATION AT TYPICAL ROOM ENTRIES AT BUILDING A.
3. UNLESS OTHERWISE INDICATED FINISH FLOOR JOINTS & COLOR CHANGES AND PAINT COLOR TRANSITIONS START AT PARTITION CORNERS.

APPROVAL STAMP
IDENTIFICATION STAMP
DIVISION OF THE STATE ARCHITECT
APPL. NO. 107417
FLS SS
DATE: 12/21/05

NO.	ISSUED FOR	DATE
1	DSA APPROVAL SET	12/08/05

LICENSED ARCHITECT ROY S. LAKE NO. C7256 REN. 7-31-06 STATE OF CALIFORNIA
CERTIFIED INSPECTOR

K M D
KAPLAN McLAUGHLIN DIAZ
ARCHITECTURE PLANNING
222 VALLEJO SAN FRANCISCO, CA 94111
(415) 398-5191 FAX (415) 394-7158

SOLANO COMMUNITY COLLEGE

SCCD
VALLEJO CENTER
Contract # A003.6123.01.V1

PROJECT NO.	DATE
419-201	12-08-05

DETAILED SECOND FLOOR FINISH PLAN
AS BUILTS

A9.05

PLOT DATE:

COPYRIGHT © 2004 BY KMD (KAPLAN McLAUGHLIN DIAZ). ALL RIGHTS RESERVED.

PATH: G:\000\000-000\ACAD\SHEETS\

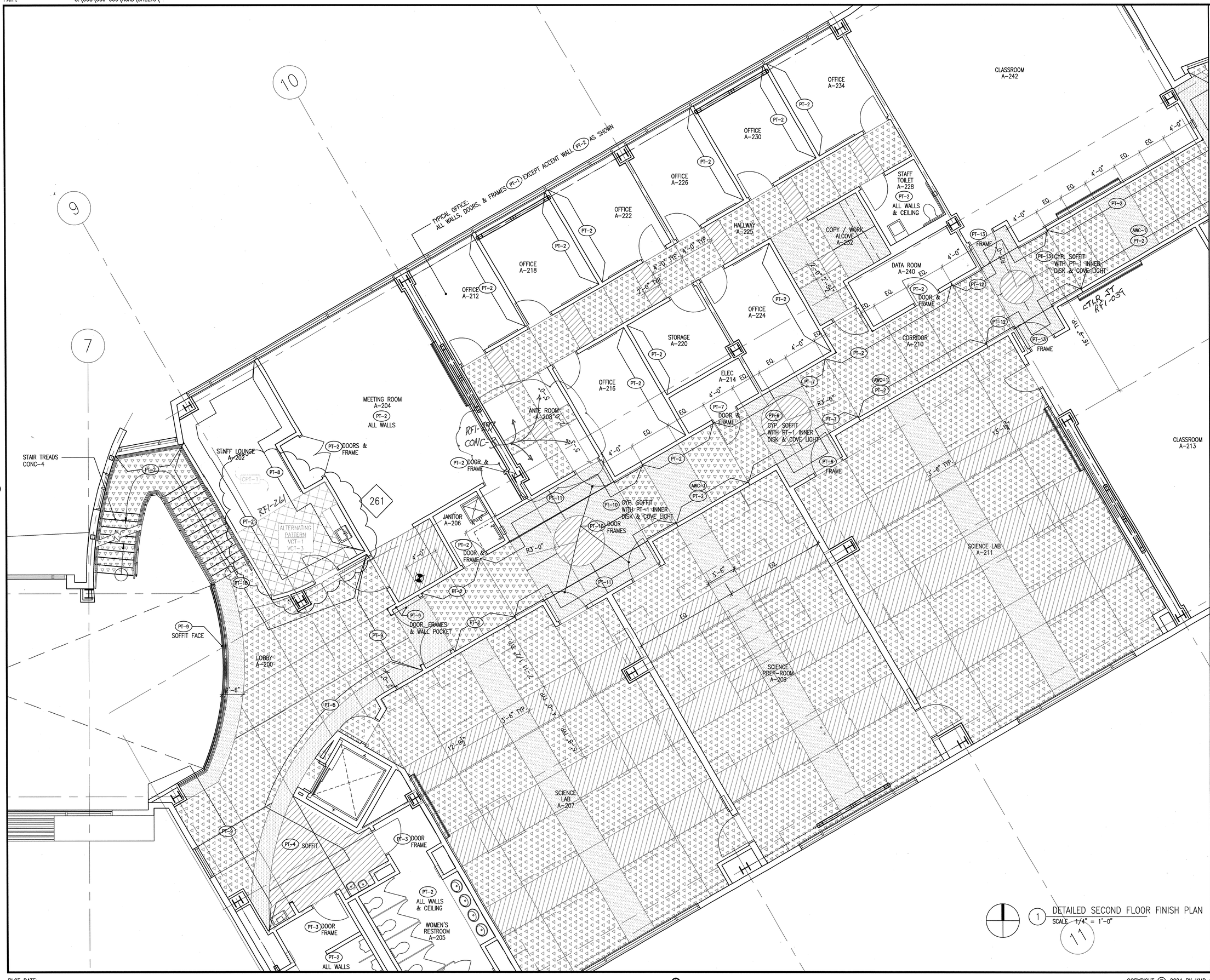

1 DETAILED SECOND FLOOR FINISH PLAN
SCALE 1/4" = 1'-0"

MATERIAL LEGEND

- CONC-2
- CONC-3
- CONC-4
- CONC-5
- (PT-) PAINT COLOR – SEE FINISH SCHEDULE
- (AWC-) ACOUSTICAL WALL COVERING – SEE FINISH SCHEDULE
- (AWP-) ACOUSTICAL WALL PANEL – SEE FINISH SCHEDULE

SHEET NOTES

1. SEE FINISH SCHEDULE, INTERIOR ELEVATIONS AND RCPS FOR FURTHER CLARIFICATIONS.
2. SEE DETAIL 3/A9.11 FOR COLOR COORDINATION AT TYPICAL ROOM ENTRIES AT BUILDING A.
3. UNLESS OTHERWISE INDICATED FINISH FLOOR JOINTS & COLOR CHANGES AND PAINT COLOR TRANSITIONS START AT PARTITION CORNERS.

APPROVAL STAMP
IDENTIFICATION STAMP
DIVISION OF THE STATE ARCHITECT
APPL 02- 107417
ACC HH FLS HH SS MC
DATE: 12/21/05

NO.	ISSUED FOR	DATE
1	DSA APPROVAL SET	12/08/05

LICENSED ARCHITECT ROY S. LAPAZ No. C7256 REN. 7-31-07 STATE OF CALIFORNIA
CERTIFIED ACCESS SPECIALIST

K M D
KAPLAN McLAUGHLIN DIAZ
ARCHITECTURE PLANNING
222 VALLEJO SAN FRANCISCO, CA 94111
(415) 398-5191 FAX (415) 394-7158

SOLANO COMMUNITY COLLEGE

SCCD
VALLEJO CENTER
Contract # A003.6123.01.V1

PROJECT NO.	DATE
419-201	12-08-05

DETAILED SECOND FLOOR FINISH PLAN
AS BUILTS

A9.06

PLOT DATE:

COPYRIGHT © 2004 BY KMD (KAPLAN McLAUGHLIN DIAZ). ALL RIGHTS RESERVED.

PATH: G:\000\000-000\ACAD\SHEETS\

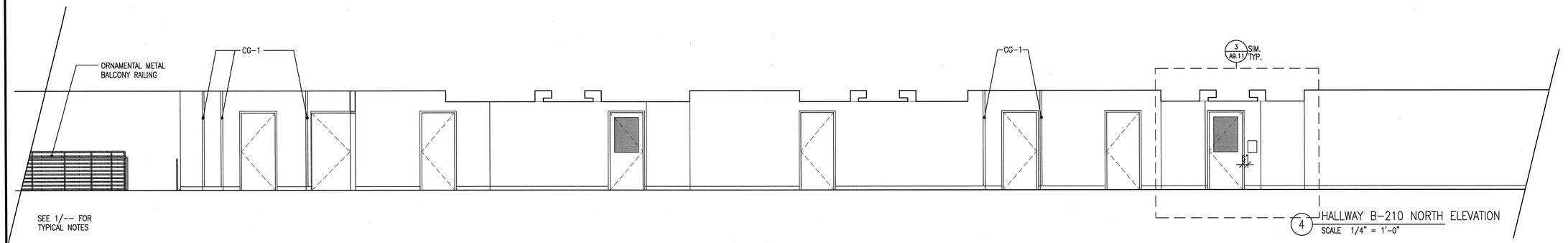

SEE 1/-- FOR TYPICAL NOTES

4 HALLWAY B-210 NORTH ELEVATION
SCALE 1/4" = 1'-0"

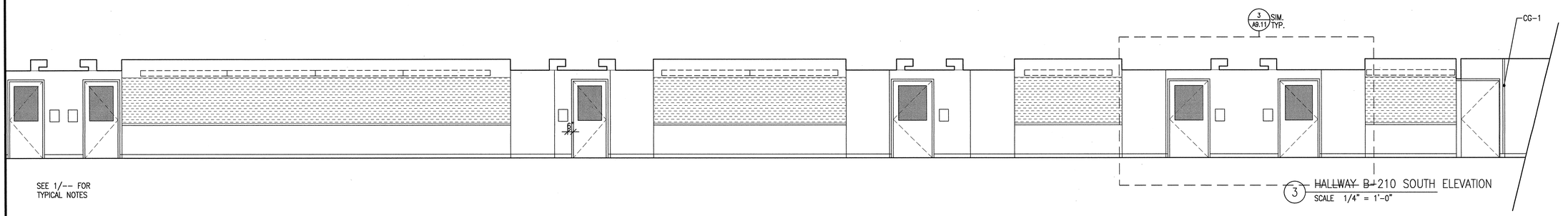

SEE 1/-- FOR TYPICAL NOTES

3 HALLWAY B-210 SOUTH ELEVATION
SCALE 1/4" = 1'-0"

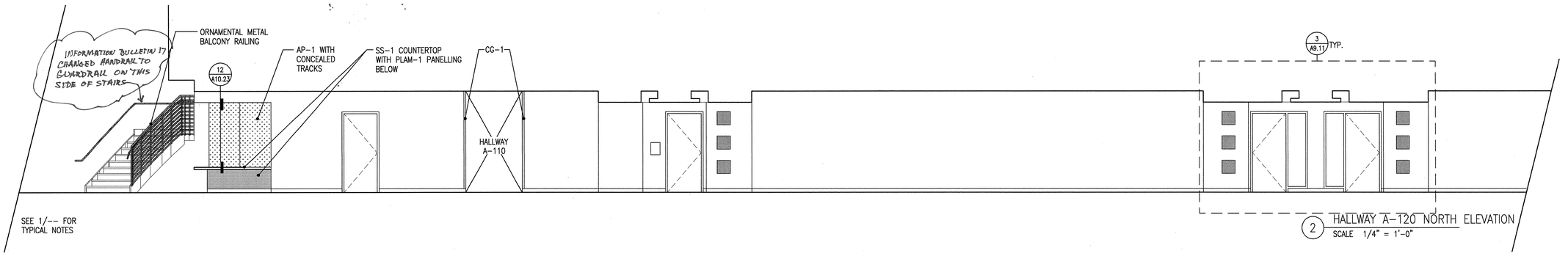

SEE 1/-- FOR TYPICAL NOTES

2 HALLWAY A-120 NORTH ELEVATION
SCALE 1/4" = 1'-0"

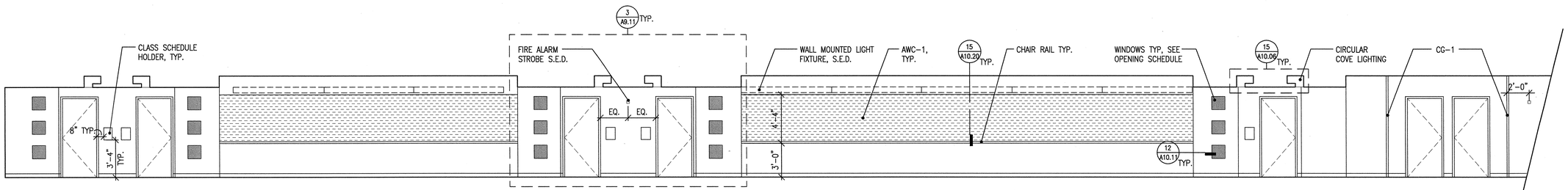

SEE FINISH PLANS FOR EXTENT & LOCATIONS OF ACCENT COLORS, TYPICAL

1 HALLWAY A-120 SOUTH ELEVATION
SCALE 1/4" = 1'-0"

APPROVAL STAMP
IDENTIFICATION STAMP
DIVISION OF THE STATE ARCHITECT
APPL. 02- 107417
AC FLS TH SS
DATE: 12/21/05

NO.	ISSUED FOR	DATE
1	DSA APPROVAL SET	12/08/05

LICENSED ARCHITECT ROY S. LATKA NO. C7256 REN. 7-31-05 STATE OF CALIFORNIA
CERTIFIED BY

K M D
KAPLAN McLAUGHLIN DIAZ
ARCHITECTURE PLANNING
222 VALLEJO SAN FRANCISCO, CA 94111
(415) 398-5191 FAX (415) 394-7158

SOLANO COMMUNITY COLLEGE

SCCD
VALLEJO CENTER
Contract # A003.6123.01.V1

PROJECT NO. 419-201
DATE 12-08-05

INTERIOR ELEVATIONS
AS BUILTS

A9.10

PLOT DATE:

COPYRIGHT © 2004 BY KMD (KAPLAN McLAUGHLIN DIAZ). ALL RIGHTS RESERVED.

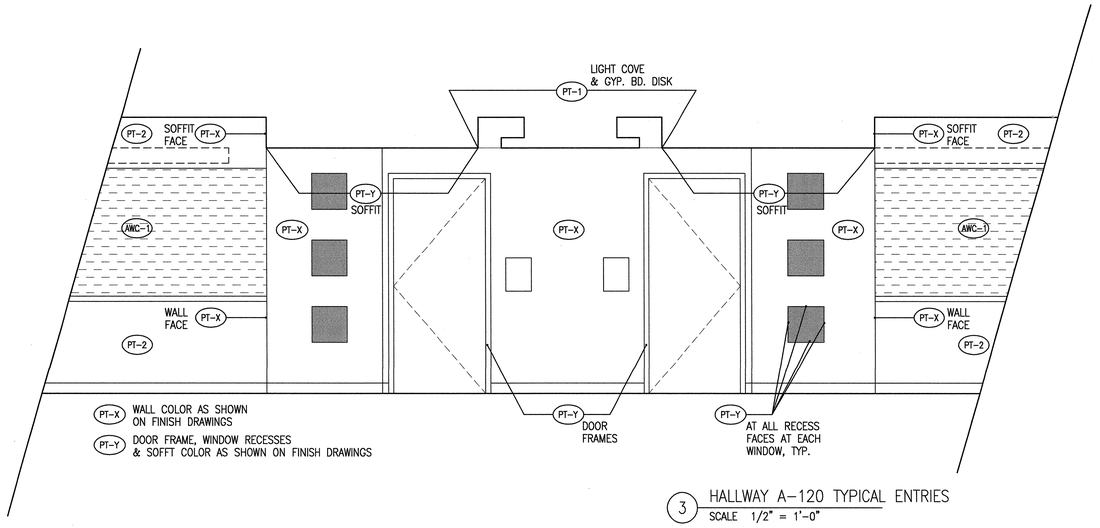

3 HALLWAY A-120 TYPICAL ENTRIES
SCALE 1/2" = 1'-0"

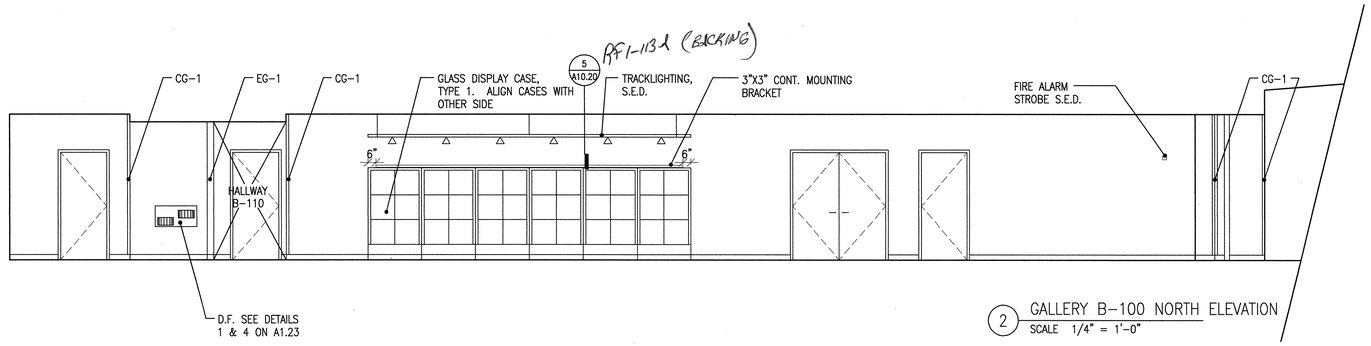

2 GALLERY B-100 NORTH ELEVATION
SCALE 1/4" = 1'-0"

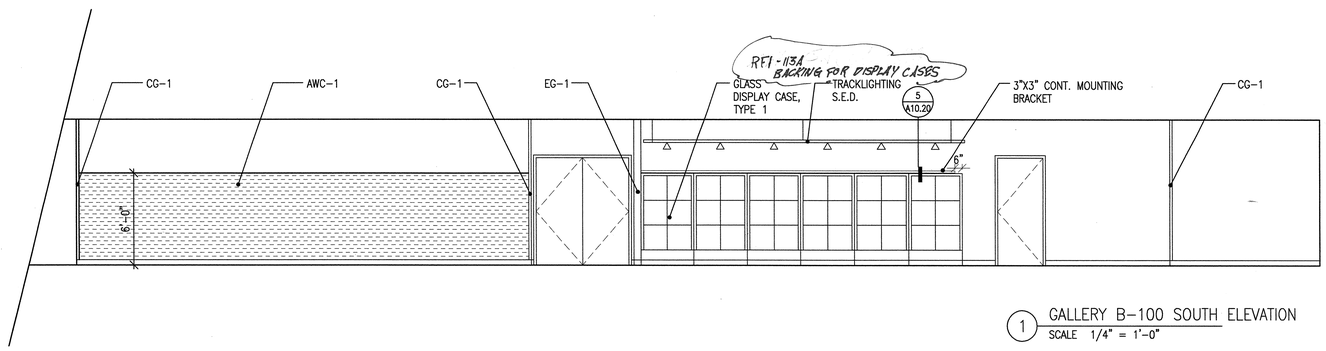

1 GALLERY B-100 SOUTH ELEVATION
SCALE 1/4" = 1'-0"

APPROVAL STAMP
IDENTIFICATION STAMP
DIVISION OF THE STATE ARCHITECT
APP'L NO.- 107417
AC FLS SS
DATE: 12/21/05

NO.	ISSUED FOR	DATE
1	DSA APPROVAL SET	12/08/05

LICENSED ARCHITECT
ROY S. LAPKO
NO. C7256
REN. 7-31-07
STATE OF CALIFORNIA
CERTIFIED

K M D
KAPLAN McLAUGHLIN DIAZ
ARCHITECTURE PLANNING
222 VALLEJO SAN FRANCISCO, CA 94111
(415) 398-5191 FAX (415) 394-7158

SOLANO COMMUNITY COLLEGE

SCCD
VALLEJO CENTER
Contract # A003.6123.01.V1

PROJECT NO.	DATE
419-201	12-08-05

INTERIOR ELEVATIONS
AS BUILTS

A9.11

COPYRIGHT © 2004 BY KMD (KAPLAN McLAUGHLIN DIAZ). ALL RIGHTS RESERVED.

PATH: G:\000\000-000\ACAD\SHEETS\

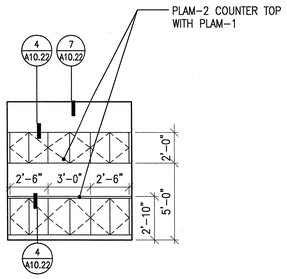

7 COPY/WORKROOM ALCOVE A-232 EAST ELEVATION
SCALE 1/4" = 1'-0"

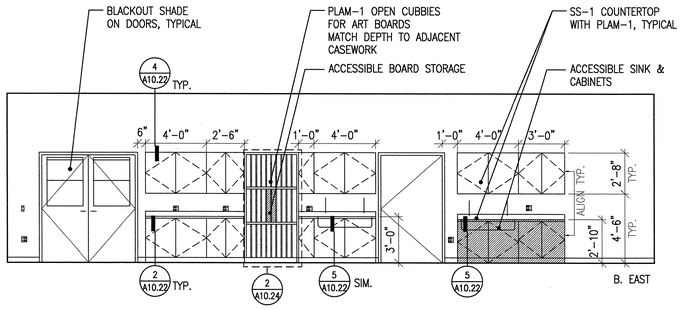

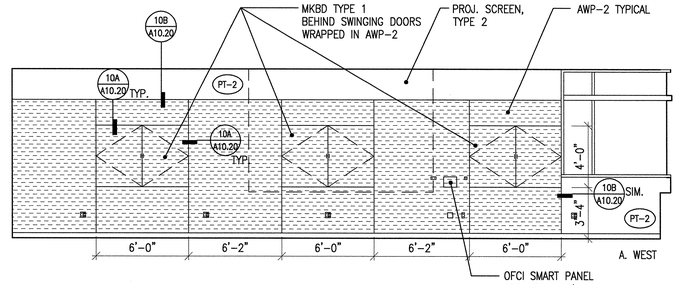

6 ART/ECE ROOM B-103 ELEVATIONS
SCALE 1/4" = 1'-0"

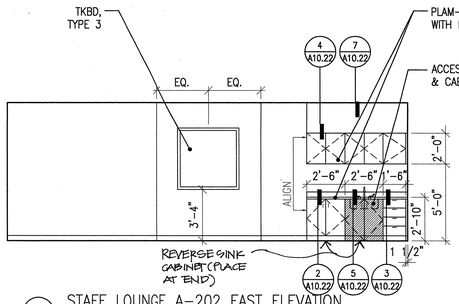

5 STAFF LOUNGE A-202 EAST ELEVATION
SCALE 1/4" = 1'-0"

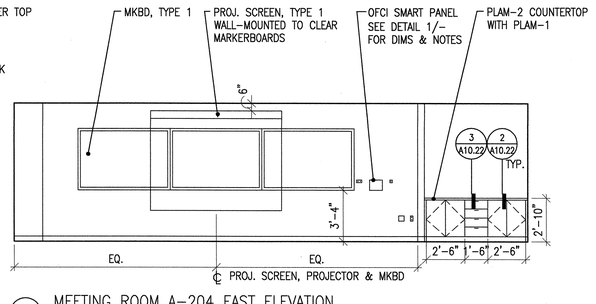

4 MEETING ROOM A-204 EAST ELEVATION
SCALE 1/4" = 1'-0"

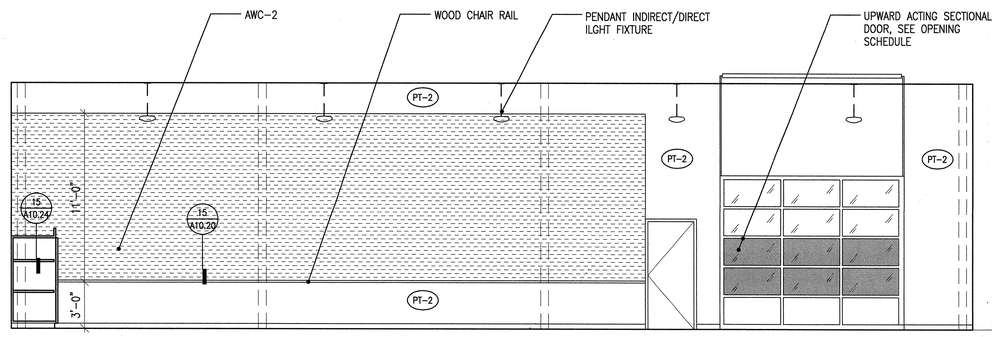

3 MULTI-PURPOSE B-101 EAST ELEVATION
SCALE 1/4" = 1'-0"

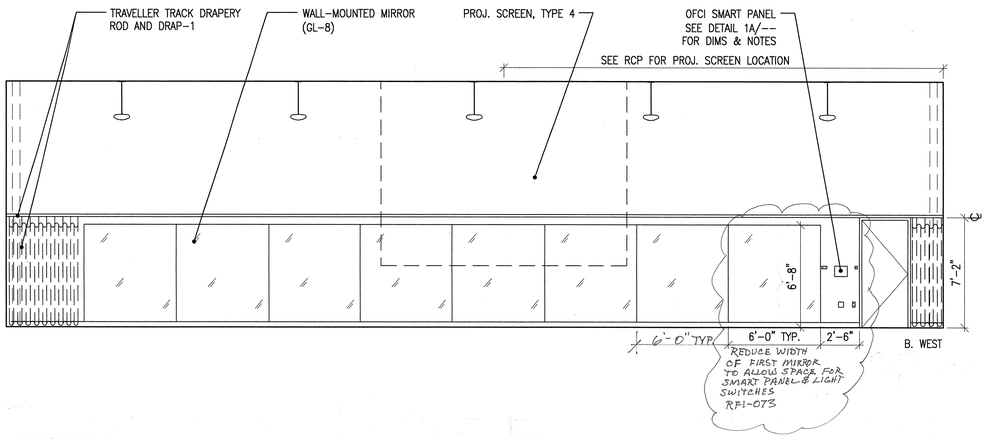

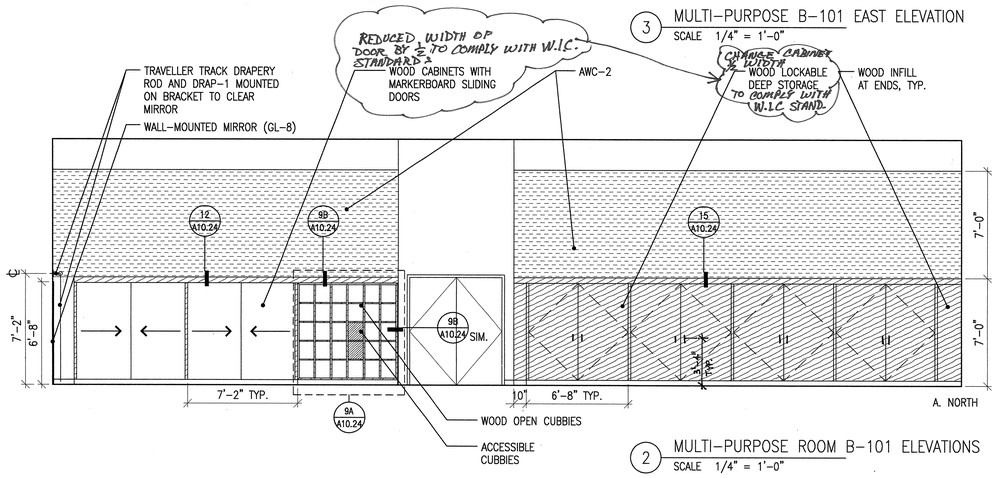

2 MULTI-PURPOSE ROOM B-101 ELEVATIONS
SCALE 1/4" = 1'-0"

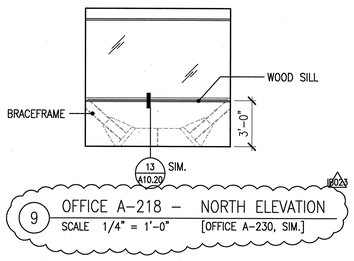

9 OFFICE A-218 – NORTH ELEVATION
SCALE 1/4" = 1'-0" [OFFICE A-230, SIM.]

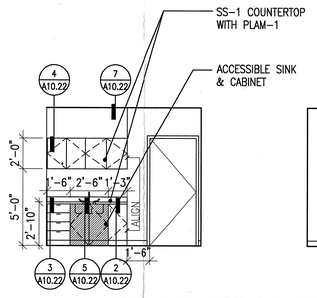

8 HEALTH ROOM A-114 WEST ELEVATION
SCALE 1/4" = 1'-0"

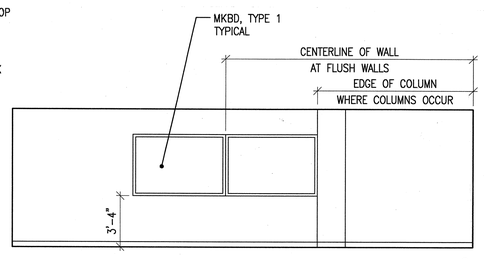

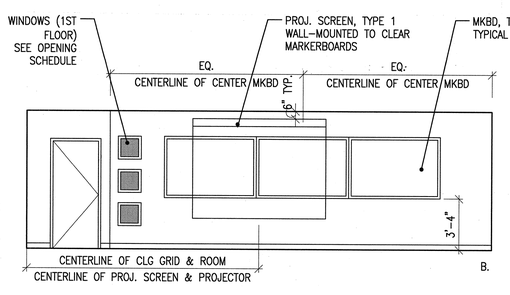

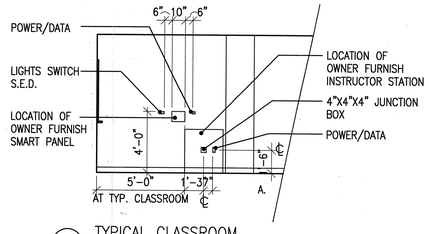

1 TYPICAL CLASSROOM
SCALE 1/4" = 1'-0"

SOLANO COMMUNITY COLLEGE
http://www.solano.cc.ca.us

March 5, 2007

TO: Darrel Tucker, Project Manager
Ralph Larsen & Son, Inc.
300 8th Avenue
San Mateo, CA 94401

RE: SCCD Measure G - Vallejo Center Construction Contract
RFI 97A and RFI 97C; Burnett & Sons casework warranty letter dated 2/22/07

FROM: Frank Kitchen
Director of Facilities

R.A. Larsen & Son is directed to proceed immediately with modifying the casework refrenced in RFI 97A and RFI 97C and as shown in Interior Elevation 2/A9.12 for the north wall of Multi-Purpose Room B-101, as follows:
1. Revise four (4) 80" wide cabinet units to six (6) 48" wide cabinet units and one (1) 32" wide cabinet unit.
2. Provide pairs of equal width doors for each casework unit with 24" wide doors on the 48" wide units and 16" wide doors on the 32" wide unit.
3. Provide three (3) sets of hinges for each door on all casework units.
4. Provide same number of shelves.
5. Center the 32" wide unit on the wall space with two (2) 48" wide units on each side.

These revisions should allow Burnett & Sons to provide a full warranty for this casework.

The District acknowledges that this revision may be an increase in scope of work. The District will negotiate and approve a fair added cost, contingent upon R.A. Larsen submitting adequate justification for added scope of work and an acceptable detailed cost estimate of the added cost.

Very Truly Yours,
Frank W. Kitchen
Director of Facilities
cc: D. Howard, M. Kung, K. Scott, file RFI 97A and 97C

APPROVAL STAMP
IDENTIFICATION STAMP
DIVISION OF THE STATE ARCHITECT
APPL NO- 107417
AC FLS TH SS RAL
DATE: 12/21/05

NO.	ISSUED FOR	DATE
1	DSA APPROVAL SET	12/08/05

LICENSED ARCHITECT ROY S. LARA No. C7256 REN. 7-31-07 STATE OF CALIFORNIA
CERTIFIED BY

K M D
KAPLAN McLAUGHLIN DIAZ
ARCHITECTURE PLANNING
222 VALLEJO SAN FRANCISCO, CA 94111
(415) 398-5191 FAX (415) 394-7158

SOLANO COMMUNITY COLLEGE

SCCD
VALLEJO CENTER
Contract # A003.6123.01.V1

PROJECT NO.	DATE
419-201	12-08-05

INTERIOR ELEVATIONS

A9.12

PLOT DATE:

COPYRIGHT © 2004 BY KMD (KAPLAN McLAUGHLIN DIAZ). ALL RIGHTS RESERVED.

PATH: G:\000\000-000\ACAD\SHEETS\

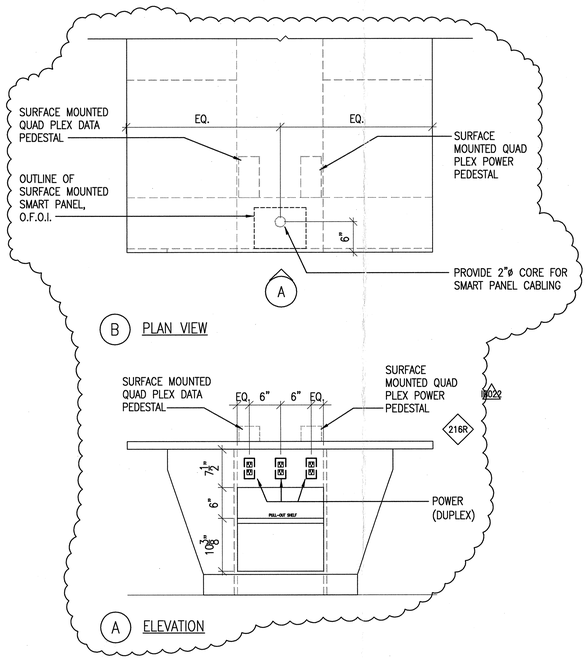

3 SCIENCE LAB CENTER TABLE
SCALE 1" = 1'-0"

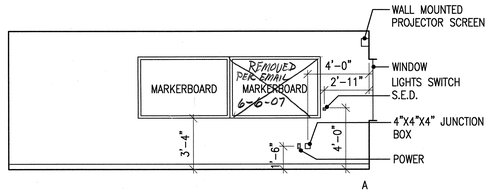

JB022

5 GROUP STUDY A-124A – WEST ELEVATION
SCALE 1/4" = 1'-0"

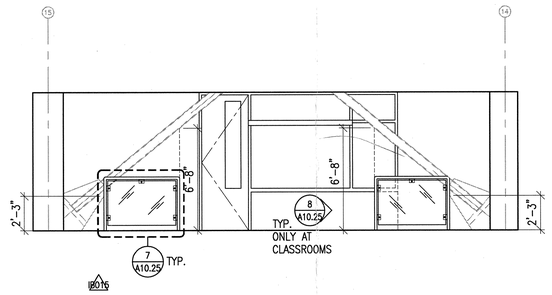

4 COMPUTER LAB – SOUTH ELEVATION
SCALE 1/4" = 1'-0"

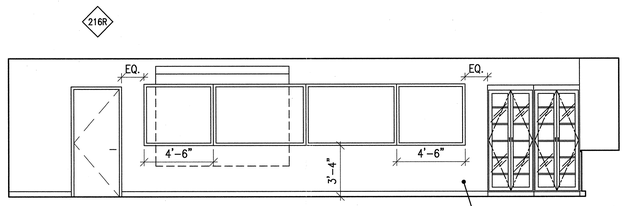

2 SCIENCE LAB A-211
SCALE 1/4" = 1'-0"

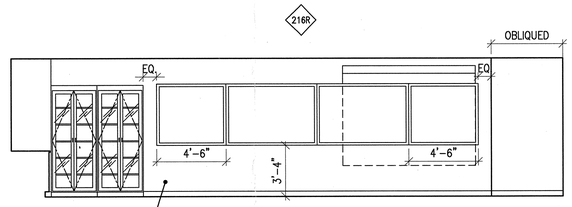

1 SCIENCE LAB A-207
SCALE 1/4" = 1'-0"

APPROVAL STAMP
IDENTIFICATION STAMP
DIVISION OF THE STATE ARCHITECT
APPL 02- 107417
AC ____ FLS ____ SS ____
DATE: ____

NO.	ISSUED FOR	DATE
JB022	INFORMATION BULLETIN #22	05/24/07
JB016	INFORMATION BULLETIN #015	03/26/07
-1	DSA APPROVAL SET	12/08/05

LICENSED ARCHITECT ROY S. LANGE NO. C7256 REN 7-31-07 STATE OF CALIFORNIA
CERTIFIED ACCESS SPECIALIST

K M D
KAPLAN McLAUGHLIN DIAZ
ARCHITECTURE PLANNING
222 VALLEJO SAN FRANCISCO, CA 94111
(415)398-5191 FAX (415)394-7158

SOLANO COMMUNITY COLLEGE

SCCD
VALLEJO CENTER
Contract # A003.6123.01.V1

PROJECT NO.	DATE
419-201	12-08-05

INTERIOR ELEVATIONS

A9.13

PLOT DATE:

COPYRIGHT © 2004 BY KMD (KAPLAN McLAUGHLIN DIAZ). ALL RIGHTS RESERVED.

DRYWALL CEILING SUSPENSION CONVENTIONAL CONSTRUCTION–ONE LAYER

1. MATERIALS. MATERIALS ARE TO COMPLY WITH APPLICABLE UBC STANDARDS. GYPSUM BOARD IS EITHER 1/2" OR 5/8" IN THICKNESS.

2. DESIGN. FOR LATERAL LOAD REFER TO CBC, SECTION 1632A. THE WEIGHT OF THE SUSPENDED CEILING SHALL NOT BE LESS THAN FOUR (4) POUNDS PER SQUARE FOOT FOR DESIGN PURPOSES.

3. DETAILS OF CONSTRUCTION.

3.1 GENERAL. GYPSUM BOARD CEILINGS SHOULD NOT SUPPORT MATERIALS OR BUILDING COMPONENTS OTHER THAN GRILLS, LIGHT FIXTURES, SMALL ELECTRICAL CONDUITS, SMALL DUCTS AND THE LIKE. ALL SUCH COMPONENTS SHALL BE SUPPORTED EITHER DIRECTLY FROM MAIN RUNNERS, OR BY SUPPLEMENTAL FRAMING WHICH IS SUPPORTED BY MAIN RUNNERS. NO VERTICAL LOADS OTHER THAN GYPSUM BOARD DEAD LOAD SHALL BE APPLIED TO CROSSFURRING.

3.2 VERTICAL SUPPORT SYSTEM.

3.2.1 THERE ARE MANY POSSIBLE VARIATIONS OF HANGER AND MAIN RUNNER SIZES AND SPACINGS LISTED IN CBC, TABLE NO. 25A–A, AND ALL OF THE COMBINATIONS ARE ACCEPTABLE. HOWEVER, THE MAIN RUNNERS THAT ARE MOST FREQUENTLY USED ARE 1½" CHANNELS, 0.475 LB/FT. COLD ROLLED. THIS IS ACCEPTABLE PROVIDED THE FOLLOWING REQUIREMENTS ARE MET.

1. VERTICAL HANGER WIRES ARE #8 GAUGE AND GALVANIZED; HOWEVER, IF CEILING IS NON–ACCESSIBLE, A #12 GAUGE WIRE MAY BE USED.

2. CROSS–FURRING MAY BE 7/8", 25 GAUGE GALVANIZED HAT SECTIONS AT 24" MAXIMUM O.C.

3. IF MAIN RUNNERS ARE SPACED AT 4'–0" O.C., HANGER WIRES SHALL BE SPACED AT 3'–0" MAXIMUM. IF MAIN RUNNERS ARE SPACED AT 3'–6" O.C., HANGER WIRES SHALL BE SPACED AT 3'–6" O.C. MAXIMUM. IF MAIN RUNNERS ARE SPACED AT 3'–0" O.C., HANGER WIRES SHALL BE SPACED AT 4'–0" MAXIMUM. TO USE A HANGER SPACING OF 4'–0" O.C. WITH A MAIN RUNNER SPACING OF 4'–0" O.C., MAIN RUNNERS MUST BE 1½" HOT ROLLED CHANNELS WEIGHING 1.12 LB/FT.

3.2.2 THE FOLLOWING REQUIREMENTS APPLY TO ALL WIRE HANGER/RUNNER COMBINATIONS:

1. HANGERS SHOULD BE SADDLE–TIED AROUND MAIN RUNNERS TO DEVELOP THE FULL STRENGTH OF THE HANGERS.

2. CROSS–FURRING SHOULD BE SADDLE–TIED TO THE MAIN RUNNERS WITH ONE STRAND OF #16 GAUGE, OR TWO STRANDS OF #18 GAUGE TIE WIRE.

3. MAIN RUNNERS SHOULD BE SPLICED BY LAPPING AND INTERLOCKING FLANGES 12" MINIMUM AND TYING NEAR EACH END WITH DOUBLE LOOPS OF #16 GAUGE WIRE.

4. CROSS–FURRING SHOULD BE SPLICED BY LAPPING AND INTERLOCKING THE PIECES EIGHT INCH (8") MINIMUM AND TYING NEAR EACH END WITH DOUBLE LOOPS OF #16 GAUGE WIRE.

3.2.3 FASTEN HANGER WIRES WITH NOT LESS THAN THREE (3) TIGHT TURNS. FASTEN BRACING WIRES WITH FOUR (4) TIGHT TURNS. MAKE ALL TIGHT TURNS WITHIN A DISTANCE OF 1–1/2 INCHES. HANGER OR BRACING WIRE ANCHORS TO THE STRUCTURE SHOULD BE INSTALLED IN SUCH A MANNER THAT THE DIRECTION OF THE WIRE ALIGNS AS CLOSELY AS POSSIBLE WITH THE DIRECTION OF THE FORCES ACTING ON THE WIRE.

NOTE: WIRE TURNS MADE BY MACHINE WHERE BOTH STRANDS HAVE BEEN DEFORMED OR BENT IN WRAPPING CAN WAIVE THE 1½" REQUIREMENT, BUT THE NUMBER OF TURNS SHOULD BE MAINTAINED, AND BE AS TIGHT AS POSSIBLE. SEPARATE ALL CEILING HANGING AND BRACING WIRES AT LEAST SIX INCHES (6") FROM ALL UNBRACED DUCTS, PIPES, CONDUIT, ETC. IT IS ACCEPTABLE TO ATTACH LIGHTWEIGHT ITEMS, SUCH AS SINGLE ELECTRICAL CONDUIT NOT EXCEEDING 3/4" NOMINAL DIAPMETER, TO HANGER WIRES USING CONNECTORS ACCEPTABLE TO D.S.A. WHEN DRILLED–IN CONCRETE ANCHORS OR SHOT–IN ANCHORS ARE USED IN REINFORCED CONCRETE FOR HANGER WIRES, 1 OUT OF 10 MUST BE FIELD TESTED FOR 200 LB. IN TENSION. WHEN DRILLED–IN CONCRETE ANCHORS ARE USED FOR BRACING WIRES, 1 OUT OF 2 MUST BE FIELD TESTED FOR 440 LB. IN TENSION, 620 LB. ABOVE THE 4TH FLOOR. SHOT–IN ANCHORS IN CONCRETE ARE NOT PERMITTED FOR BRACING WIRES. IF ANY SHOT–IN OR DRILLED–IN ANCHOR FAILS, SEE SECTION 1923A.3.5, TITLE 24.

NOTE: DRILLED–IN OR SHOT–IN ANCHORS REQUIRE SPECIAL D.S.A. APPROVAL WHEN USED IN PRE–STRESSED CONCRETE. PROVIDE TRAPEZE OR OTHER SUPPLEMENTARY SUPPORT MEMBERS AT OBSTRUCTIONS TO TYPICAL HANGER SPACING. PROVIDE ADDITIONAL HANGERS, STRUTS OR BRACES AS REQUIRED AT ALL CEILING BREAKS, SOFFITS OR DISCONTINUOUS AREAS. HANGER WIRES THAT ARE MORE THAN 1 IN 6 OUT OF PLUMB ARE TO HAVE COUNTERSLOPING WIRES.

4. SUPPORT AND ANCHORAGE OF LIGHT FIXTURES AND MECHANICAL SERVICES.

4.1 ALL RECESSED OR DROP–IN LIGHT FIXTURES, AS WELL AS CEILING MOUNTED MECHANICAL AIR TERMINALS AND SERVICES, SHALL BE SUPPORTED DIRECTLY BY MAIN RUNNERS OR BY SUPPLEMENTAL FRAMING WHICH IS SUPPORTED BY MAIN RUNNERS AND POSITIVELY ATTACHED WITH SCREWS OR OTHER APPROVED CONNECTORS.

4.2 SURFACE MOUNTED FIXTURES SHALL BE ATTACHED TO A MAIN RUNNER WITH A POSITIVE CLAMPING DEVICE MADE OF MATERIAL WITH A MINIMUM OF 14 GAUGE. ROTATIONAL SPRING CLAMPS DO NOT COMPLY.

5. LATERAL SYSTEM.

5.1 WIRE BRACE SYSTEM. PROVIDE BRACING ASSEMBLIES PER DETAILS AT THE FOLLOWING SPACING:

1. FOR ESSENTIAL SERVICES BUILDINGS, PLACE BRACING ASSEMBLIES NOT MORE THAN 8' BY 12' ON CENTER.

2. PROVIDE BRACING ASSEMBLIES AT LOCATIONS NOT MORE THAN 1/2 THE SPACINGS GIVEN ABOVE, FROM EACH PERIMETER WALL AND AT THE EDGE OF VERTICAL CEILING OFFSETS. THE SLOPE OF THESE WIRES SHALL NOT EXCEED 45 DEGREES FROM THE PLANE OF THE CEILING AND SHALL BE TAUT. SPLICES IN BRACING WIRES ARE NOT TO BE PERMITTED WITHOUT SPECIAL D.S.A. APPROVAL.

3. CEILING GRID MEMBERS MAY BE ATTACHED TO NOT MORE THAN TWO (2) ADJACENT WALLS. CEILING GRID MEMBERS SHALL BE AT LEAST ½" FREE OF OTHER WALLS. IF WALLS RUN DIAGONALLY TO CEILING GRID SYSTEM RUNNERS, ONE END OF MAIN AND CROSS RUNNERS SHOULD BE FREE, AND A MINIMUM OF 1/2" CLEAR OF WALL.

4. SUSPENDED CEILING SYSTEMS WITH AN AREA OF 96 SQUARE FEET OR LESS, SURROUNDED BY WALLS WHICH CONNECT DIRECTLY TO THE STRUCTURE ABOVE, DO NOT REQUIRE BRACING ASSEMBLIES WHEN ATTACHED TO AT LEAST TWO ADJACENT WALLS.

5.2 ALTERNATE SYSTEM. DESIGN AS A DIAPHRAGM, SIMILAR TO PLYWOOD DIAPHRAGM CONCEPT, SUBJECT TO ACCEPTANCE BY THE D.S.A. REGIONAL OFFICE.

5.2.1 DIAPHRAGM RATIOS.
HORIZONTAL 2:1 MAXIMUM.
VERTICAL 1:1 MAXIMUM.

5.2.2 A MAXIMUM DIAPHRAGM SHEAR EQUAL TO 50 LB./FT. IS ALLOWED WITH 1" OR 1¼" HI–LO TYPE S OR S–12 BUGLE HEAD SCREWS AT 12" O.C. AND 3/8" SCREW EDGE DISTANCE AT ALL GYPSUM BOARD EDGES AND INTERMEDIATE SUPPORTS. A WALL CONSTRUCTED SIMILARLY CAN RESIST THE SAME SHEAR FORCE PROVIDED THE GYPSUM BOARD IS ON THE SAME SIDE OF THE STUDS AS THE CEILING IS, AND A POSITIVE CONNECTION BETWEEN THE CEILING AND THE WALL IS DETAILED. THE GYPSUM BOARD DIAPHRAGMS ARE TO RESIST LATERAL LOADS DUE TO THEIR OWN WEIGHT AND/OR THE CEILING DIAPHRAGM(S) ONLY.

5.2.3 DETAILS ARE REQUIRED PROVIDING FOR LATERAL LOAD TRANSFER FROM THE GYPSUM BOARD TO SHEAR WALLS, OR OTHER LATERAL LOAD RESISTING GYPSUM BOARD TO SHEAR WALLS, OR OTHER LATERAL LOAD RESISTING ELEMENTS, ON ALL FOUR SIDES OF THE DIAPHRAGM.

METAL SUSPENSION SYSTEMS FOR LAY–IN PANEL CEILINGS

1. CEILING NOTES. THE FOLLOWING NOTES WILL BE ACCEPTABLE IN PLANS AND SPECIFICATIONS FOR CEILING SYSTEMS WHOSE TOTAL WEIGHT, INCLUDING AIR CONDITIONING GRILLES AND LIGHT FIXTURES, DOES NOT EXCEED FOUR (4) PSF. HEAVIER SYSTEMS AND THOSE SUPPORTING LATERAL LOADS FROM PARTITIONS, WILL REQUIRE SPECIAL DESIGN DETAILS.

1.1 12 GA. (MIN.) OR 10 GA. HANGER WIRES MAY BE USED FOR UP TO AND INCLUDING 4'–0" X 4'–0" GRID SPACING AND SHALL BE ATTACHED TO MAIN RUNNERS WITHIN 2" OF INTERSECTIONS.

1.2 PROVIDE 12 GA. HANGER WIRES AT THE ENDS OF ALL MAIN AND CROSS RUNNERS WITHIN EIGHT INCHES (8") OF THE SUPPORT OR WITHIN ONE–FOURTH (1/4) OF THE LENGTH OF THE END TEE, WHICHEVER IS LEAST, FOR THE PERIMETER OF THE CEILING AREA. END CONNECTIONS FOR RUNNERS WHICH ARE DESIGNED AND DETAILED TO RESIST THE APPLIED VERTICAL AND HORIZONTAL FORCES MAY BE USED IN LIEU OF THE 12 GA. HANGER WIRES, SUBJECT TO D.S.A. REVIEW AND APPROVAL.

1.3 PROVIDE TRAPEZE OR OTHER SUPPLEMENTARY SUPPORT MEMBERS AT OBSTRUCTIONS TO TYPICAL HANGER SPACING. PROVIDE ADDITIONAL HANGERS, STRUTS OR BRACES AS REQUIRED AT ALL CEILING BREAKS, SOFFITS OR DISCONTINUOUS AREAS. HANGER WIRES THAT ARE MORE THAN 1 IN 6 OUT OF PLUMB ARE TO HAVE COUNTERSLOPING WIRES.

1.4 CEILING GRID MEMBERS MAY BE ATTACHED TO NOT MORE THAN TWO (2) ADJACENT WALLS. CEILING GRID MEMBERS SHALL BE AT LEAST 1/2" FREE OF OTHER WALLS. IF WALLS RUN DIAGONALLY TO CEILING GRID SYSTEM RUNNERS, ONE END OF MAIN AND CROSS RUNNERS SHOULD BE FREE, AND A MINIMUM OF 1/2" CLEAR OF WALL.

1.5 AT THE PERIMETER OF THE CEILING AREA WHERE MAIN OR CROSS RUNNERS ARE NOT CONNECTED TO THE ADJACENT WALL, PROVIDE INTERCONNECTION BETWEEN THE RUNNERS AT THE FREE END TO PREVENT LATERAL SPREADING. A METAL STRUT OR A 16 GA. WIRE WITH A POSITIVE MECHANICAL CONNECTION TO THE RUNNER MAY BE USED. WHERE THE PERPENDICULAR DISTANCE FROM THE WALL TO THE FIRST PARALLEL RUNNER IS 12" OR LESS, THIS INTERLOCK IS NOT REQUIRED.

1.6 PROVIDE BRACING ASSEMBLIES CONSISTING OF A COMPRESSION STRUT AND FOUR (4) 12 GA. SPLAYED BRACING WIRES ORIENTED 90 DEGREES FROM EACH OTHER (SEE DETAILS) AT THE FOLLOWING SPACING:

1. FOR ESSENTIAL SERVICES BUILDINGS, PLACE BRACING ASSEMBLIES NOT MORE THAN 8' BY 12' ON CENTER.

2. PROVIDE BRACING ASSEMBLIES AT LOCATIONS NOT MORE THAN ONE HALF (1/2) THE SPACINGS GIVEN ABOVE, FROM EACH PERIMETER WALL AND AT THE EDGE OF VERTICAL CEILING OFFSETS. THE SLOPE OF THESE WIRES SHALL NOT EXCEED 45 DEGREES FROM THE PLANE OF THE CEILING AND SHALL BE TAUT. SPLICES IN BRACING WIRES ARE NOT TO BE PERMITTED WITHOUT SPECIAL D.S.A. APPROVAL.

3. SUSPENDED ACOUSTICAL CEILING SYSTEMS WITH A CEILING AREA OF 96 SQUARE FEET OR LESS, SURROUNDED BY WALLS WHICH CONNECT DIRECTLY TO THE STRUCTURE ABOVE, DO NOT REQUIRE BRACING ASSEMBLIES WHEN ATTACHED TO TWO ADJACENT WALLS.

1.7 FASTEN HANGER WIRES WITH NOT LESS THAN THREE (3) TIGHT TURNS. FASTEN BRACING WIRES WITH FOUR (4) TIGHT TURNS. MAKE ALL TIGHT TURNS WITHIN A DISTANCE OF 1½" INCHES. HANGER OR BRACING WIRE ANCHORS TO THE STRUCTURE SHOULD BE INSTALLED IN SUCH A MANNER THAT THE DIRECTION OF THE WIRE ALIGNS AS CLOSELY AS POSSIBLE WITH THE DIRECTION OF THE FORCES ACTING ON THE WIRE.

NOTE: WIRE TURNS MADE BY MACHINE WHERE BOTH STRANDS HAVE BEEN DEFORMED OR BENT IN WRAPPING CAN WAIVE THE 1½" REQUIREMENT, BUT THE NUMBER OF TURNS SHOULD BE MAINTAINED, AND BE AS TIGHT AS POSSIBLE.

1.8 SEPARATE ALL CEILING HANGING AND BRACING WIRES AT LEAST SIX INCHES (6") FROM ALL UNBRACED DUCTS, PIPES, CONDUIT, ETC. IT IS ACCEPTABLE TO ATTACH LIGHTWEIGHT ITEMS, SUCH AS SINGLE ELECTRICAL CONDUIT NOT EXCEEDING 3/4" NOMINAL DIAMETER, TO HANGER WIRES USING CONNECTORS ACCEPTABLE TO D.S.A.

1.9 WHEN DRILLED–IN CONCRETE ANCHORS OR SHOT–IN ANCHORS ARE USED IN REINFORCED CONCRETE FOR HANGER WIRES, 1 OUT OF 10 MUST BE FIELD TESTED FOR 200 LB. IN TENSION. WHEN DRILLED–IN CONCRETE ANCHORS ARE USED FOR BRACING WIRES. SHOT–IN ANCHORS IN CONCRETE ARE NOT PERMITTED FOR BRACING WIRES. IF ANY SHOT–IN OR DRILLED–IN ANCHOR FAILS, SEE CBC, SECTION 1923A.3.5.

NOTE: DRILLED–IN OR SHOT–IN ANCHORS REQUIRE SPECIAL D.S.A. APPROVAL WHEN USED IN PRE–STRESSED CONCRETE.

1.10 ATTACH ALL LIGHT FIXTURES AND CEILING MOUNTED AIR TERMINALS OR SERVICES, TO THE CEILING GRID RUNNERS TO RESIST A HORIZONTAL FORCE EQUAL TO THE WEIGHT OF THE FIXTURES. SCREWS OR APPROVED FASTENERS ARE REQUIRED.

1.11 FLUSH OR RECESSED LIGHT FIXTURES AND AIR TERMINALS OR SERVICES, WEIGHING LESS THAN 56 LB., MAY BE SUPPORTED DIRECTLY ON THE RUNNERS OF A HEAVY DUTY GRID SYSTEM BUT, IN ADDITION, THEY MUST HAVE A MINIMUM OF TWO 12 GA. SLACK SAFETY WIRES ATTACHED TO THE FIXTURE AT DIAGONAL CORNERS AND ANCHORED TO THE STRUCTURE ABOVE. ALL 4' X 4' LIGHT FIXTURES MUST HAVE SLACK SAFETY WIRES AT EACH CORNER. ALL FLUSH OR RECESSED LIGHT FIXTURES AND AIR TERMINALS OR SERVICES WEIGHING 56 LB. OR MORE MUST BE INDEPENDENTLY SUPPORTED BY NOT LESS THAN FOUR (4) TAUT 12 GA. WIRES EACH ATTACHED TO THE FIXTURE AND TO THE STRUCTURE ABOVE REGARDLESS OF THE TYPE OF CEILING GRID SYSTEM USED. THE FOUR (4) TAUT 12 GA. WIRES INCLUDING THEIR ATTACHMENT TO THE STRUCTURE ABOVE MUST BE CAPABLE OF SUPPORTING FOUR (4) TIMES THE WEIGHT OF THE UNIT.

1.12 NOT USED

1.13 SUPPORT SURFACE MOUNTED LIGHT FIXTURES BY AT LEAST TWO POSITIVE DEVICES WHICH SURROUND THE CEILING RUNNER AND WHICH ARE EACH SUPPORTED FROM THE STRUCTURE ABOVE BY A 12 GA. WIRE. SPRING CLIPS OR CLAMPS THAT CONNECT ONLY TO THE RUNNER ARE NOT ACCEPTABLE.

PROVIDE ADDITIONAL SUPPORTS WHEN LIGHT FIXTURES ARE 8'–0" OR LONGER.

1.14 SUPPORT PENDANT MOUNTED LIGHT FIXTURES DIRECTLY FROM THE STRUCTURE ABOVE WITH HANGER WIRES OR CABLES PASSING THROUGH EACH PENDANT HANGER AND CAPABLE OF SUPPORTING FOUR (4) TIMES THE WEIGHT OF THE FIXTURE. A BRACING ASSEMBLY PER THE ACCOMPANYING DETAILS, IS REQUIRED WHERE THE PENDANT HANGER PENETRATES THE CEILING. SPECIAL DETAILS ARE REQUIRED TO ATTACH THE PENDANT HANGER TO THE BRACING ASSEMBLY TO TRANSMIT HORIZONTAL FORCES.

2. ADDITIONAL REQUIREMENTS FOR FIRE RATED CEILINGS.

2.1 PROVIDE UNDERWRITER LABORATORY (U.L.) DESIGN NUMBER OR STATE FIRE MARSHAL (SFM) LISTING NUMBER. THE COMPONENTS AND INSTALLATION DETAILS MUST CONFORM IN EVERY RESPECT WITH THE U.L. OR SFM APPROVAL FOR THE DESIGN NUMBER SPECIFIED. CUSTOM DESIGNS WHICH COMBINE COMPONENTS FROM DIFFERENT APPROVED DESIGNS BUT HAVE NOT BEEN TESTED AS A COMPLETE ASSEMBLY ARE NOT ACCEPTABLE.

2.2 FOR ESSENTIAL SERVICES BUILDINGS, BRACING ASSEMBLIES ARE REQUIRED FOR EACH 96 SQUARE FEET. THE FIRST BRACING ASSEMBLY IS REQUIRED NOT MORE THAN FOUR FEET (4'–0") FROM EACH WALL. A MINIMUM OF ONE BRACING ASSEMBLY IS REQUIRED BETWEEN ANY TWO ADJACENT EXPANSION CUT–OUTS ON RUNNERS BEING BRACED.

2.3 POP RIVETS, SCREWS, OR OTHER ATTACHMENTS ARE NOT ACCEPTABLE UNLESS SPECIFICALLY DETAILED ON THE DRAWINGS AND APPROVED BY U.L. AND SFMGHT.

3. ADDITIONAL REQUIREMENTS FOR METAL PANELS. METAL PANELS AND PANELS WEIGHING MORE THAN 1/2 PSF, OTHER THAN ACOUSTICAL TILE, ARE TO BE POSITIVELY ATTACHED TO THE CEILING SUSPENSION RUNNERS.

4. SUSPENDED ACOUSTICAL CEILINGS BELOW GYPSUM BOARD CEILINGS. WHERE GYPSUM BOARD OR OTHER CEILING FINISHES ARE ATTACHED TO THE FRAMING, SPECIAL DETAILS WILL BE REQUIRED FOR THE VERTICAL HANGER WIRE AND LATERAL BRACING WIRE SUPPORT CONNECTIONS TO THE FRAMING.

5. REUSE OF EXISTING CEILING HANGER WIRES AND SPLAY WIRES.

5.1 THE GAUGE AND SPACING OF THE WIRES MUST COMPLY WITH THE CURRENT APPLICABLE CODES.

5.2 ALL EXISTING CEILING HANGER WIRES MUST BE TESTED TO 200 LB. IN TENSION.

5.3 ALL EXISTING SPLAYED BRACING WIRES MUST BE FIELD TESTED TO 440 LB. IN TENSION.

5.4 IF A NEW WIRE IS TO BE SPLICED TO AN EXISTING WIRE, THE FOLLOWING IS REQUIRED:

1. THE ARCHITECT OR STRUCTURAL ENGINEER IN GENERAL RESPONSIBLE CHARGE MUST SUBMIT TO D.S.A. A DETAIL AND SPECIFICATION DESCRIBING HOW THE SPLICE IS TO BE MADE.
2. ALL NEW WIRES, AFTER BEING SPLICED TO THE EXISTING WIRES, MUST BE FIELD TESTED PER ITEMS 5.2 AND 5.3 ABOVE.
3. ALL FIELD TESTS MUST BE PERFORMED IN THE PRESENCE OF THE PROJECT INSPECTOR.

NOTES TO INTERIOR PARTITIONS

1. ALL DIMENSIONS ARE TAKEN TO CENTERLINE OF COLUMN OR FACE OF FINISH (F.O.F.) UNLESS OTHERWISE NOTED.

2. UNLESS OTHERWISE NOTED, INTERIOR PARTITIONS SHALL BE FRAMED WITH METAL STUDS 16" ON CENTER, AS FOLLOWS:

STUD SIZES FOR TYPICAL WALL STUDS						
	1 HR AND NON RATED PARTITIONS					
	14' WALL	16' WALL	17' WALL			
	400S137–20	400S137–20	4001S137–20			

SHAFT WALL STUDS WITHOUT EQUIPMENT LOAD						
	14' TALL PARTITION		16' PARTITION		17' PARTITION	
	1 HR WALL		1 HR WALL		1 HR WALL	
	600CH20		600CH20		600CH20	

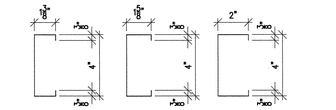

S–STUDS 400S137 400S162 400S200

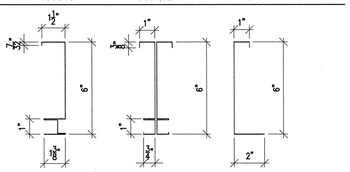

CHANNEL STUDS 600CH20 2–600ES20 STD TRACK FOR SHAFT WALL STUDS

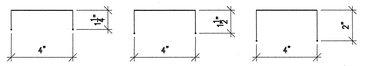

400T125 400T150 400T200

STANDARD TOP AND BOTTOM TRACK
STANDARD TRACK 1" LEG TRACK – MSMA ST SECTIONS
DEEP LEG TRACK 1½" LEG TRACK – MSMA WT SECTIONS

NOTES:
1. SEE WALL STUD FRAMING SECTIONS FOR GAGE OF STUDS AND TRACKS.
2. Fy=50ksi FOR 14 AND 16 GAGE SECTIONS.
3. Fy=33ksi FOR 18 AND 20 GAGE SECTIONS.

3. ON CONTINUOUS WALL SURFACE WHERE CONSTRUCTION INVOLVES MORE THAN ONE MATERIAL, FINISH OR MATERIAL THICKNESS, ALIGN FACE OF FINISH UNLESS OTHERWISE NOTED:

4. STUDS SIZES SHALL BE 6" TO NEAREST INTERSECTING WALL WHERE RECESSED ELECTRICAL PANEL BOXES OR STANDPIPES ARE LOCATED UNLESS OTHERWISE NOTED.

5. PROTECT ALL PANELS, FIXTURES, AND OTHER PENETRATIONS IN PARTITIONS AND CEILING IN ORDER TO MAINTAIN REQUIRED FIRE SEPARATIONS AND RATED ASSEMBLIES.

6. WHERE EQUIPMENT AND CABINETS ARE SHOWN TO BE RECESSED IN OR MOUNTED ON 1–HOUR PARTITIONS, THE FINISH SURFACE SHALL RUN CONTINUOUSLY BEHIND AND AROUND SUCH EQUIPMENT AND CABINETS, SECURED TO 1 5/8" MIN. METAL STUD FRAMING, BEFORE THEIR INSTALLATION TO MAINTAIN FIRE RATING CAVITY DEPTH.

7. VERIFY MOUNTING HEIGHTS OF BACKING PLATES AND SPECIAL STRUCTURAL SUPPORT REQUIREMENTS WITH EQUIPMENT MANUFACTURERS BEFORE INSTALLING BACKING PLATES AND SUPPORT. PROVIDE BACKING PLATES FOR RAILS, CASEWORK, COUNTERS, EQUIPMENT AND FIXTURES UNLESS NOTED OTHERWISE. SEE DETAILS ON SHEET A10.02 FOR TYPICAL BACKING PLATE INFORMATION.

8. WHERE PARTITIONS ARE SCHEDULED TO RECEIVE CERAMIC TILE, PROVIDE CEMENTITIOUS BACKER BOARD IN LIEU OF GYPSUM BOARD.

9. SHOT–IN PINS SHALL NOT BE USED IN CONCRETE CURBS OR CLOSER THAN 3" FROM THE EDGE OF CONCRETE. USE 1/4" DIAMETER WEDGE ANCHORS WITH A MIN. CLEARANCE OF 2" FROM EDGE OF CONCRETE.

10. DRIVE PINS SHALL HAVE 1/4" DIAMETER NOMINAL HEAD WITH MIN. SHANK DIAMETER OF .145" AND MIN. 11/4" EMBEDMENT INTO CONCRETE.

11. PROVIDE RATED ACCESS PANEL TWO FEET WIDE BY THREE FEET HIGH AT SIDE OF SHAFT AT LOWEST FLOOR LEVEL OF SHAFT EXTENT. BOTTOM OF ACCESS PANEL FRAME SHALL BE 4" ABOVE FINISHED FLOOR AT TOP OF BASE. COORDINATE LOCATION TO PROVIDE ACCESS TO FIRE DAMPER AND OTHER MECHANICAL CONTROLS. INDIVIDUALLY CORED PENETRATIONS THROUGH FLOOR SHALL BE FIRE–STOPPED BETWEEN PIPE AND CONCRETE.

12. PROVIDE 1–HOUR APPROVED CONSTRUCTION CLOSURE AT BOTTOM OF DUCT SHAFTS.

OPTION 1: CONSTRUCTION SHALL BE 3/4" BY NO. 16 GAUGE COLD–ROLLED CHANNELS 16" ON CENTER WIRE WITH METAL LATH APPLIED TO ONE FACE AND TIED WITH NO. 18 GAUGE WIRE AT 6" SPACING. PERLITE OR VERMICULITE GYPSUM PLASTER EACH SIDE. FOR THREE–COAT WORK, THE PLASTER MIX FOR THE SECOND COAT SHALL NOT EXCEED 100 POUNDS OF GYPSUM TO 2 1/2 CUBIC FEET OF AGGREGATE FOR THE 2–HOUR SYSTEM THICKNESS SHALL BE 2 1/2 " MIN.

OPTION 2: APPROVED SHAFTWALL OR DRYWALL CONSTRUCTION FOR HORIZONTAL INSTALLATION.

13. BACKING PLATE DETAILS REFER TO "HEIGHT ZONES" AS FOLLOWS:

FLOOR LEVELS IN EACH BLDG HEIGHT ZONE		
BLDG HEIGHT ZONE	BUILDING A (CLASSROOM)	BUILDING B (MULTI–USE)
B *	2ND FLOOR & ROOF	NA
A *	1ST FLOOR	1ST FLOOR

REFER TO SHEET A10.02 FOR STUD SIZE AND SPACING REQUIREMSNTS FOR WALLS WITH BACKING

14. SEISMIC COEFFICIENT (Cq) FOR THESE PARTITIONS IS GREATER THAN 0.38 AND LESS THAN OR EQUAL TO 0.52 (0.38 < Cq <= 0.52)

15. CBC – TITLE 24 REQUIRES ALL LIGHT GAUGE STEEL FRAMING MEMBERS FOR WALLS AND CEILINGS TO BEAR THE I.C.B.O. APPROVAL STAMP NUMBER.

APPROVAL STAMP
IDENTIFICATION STAMP
DIVISION OF THE STATE ARCHITECT
APP. 02– 107417
ACC FLS TH SS MC
DATE: 12/21/05

NO.	ISSUED FOR	DATE
1	DSA APPROVAL SET	12/08/05

LICENSED ARCHITECT ROY S. LANG NO. C7256 REN. 7-31-07 STATE OF CALIFORNIA
CERTIFIED

K M D
KAPLAN McLAUGHLIN DIAZ
ARCHITECTURE PLANNING
222 VALLEJO SAN FRANCISCO, CA 94111
(415) 398-5191 FAX (415) 394-7158

SOLANO COMMUNITY COLLEGE

SCCD
VALLEJO CENTER
Contract # A003.6123.01.V1

PROJECT NO. 419–201
DATE 12–08–05

CEILING AND PARTITION NOTES CODE CBC 2001
AS BUILTS

A10.00

PLOT DATE:

COPYRIGHT © 2004 BY KMD (KAPLAN McLAUGHLIN DIAZ). ALL RIGHTS RESERVED.

PATH: G:\000\000-000\ACAD\SHEETS\

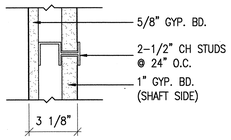

1.21.FH 1Hr SHAFT WALL

UL DESIGN U415 (A)

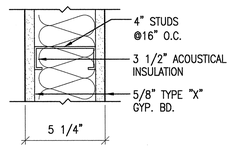

1.01.FH 1HR ACOUSTICAL PARTITION

STC 40 TO 49

UL DESIGN U419
GA FILE NO. WP1072

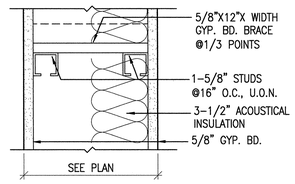

0.20.XX ACOUSTICAL CHASE WALL

STC-52

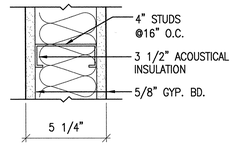

0.13.FH ACOUSTICAL PARTITION

STC 40 TO 44

FH TYP.
XX WHERE SHOWN ON PLANS

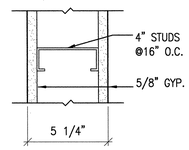

0.06.XX PARTITION

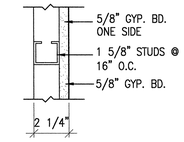

0.01.XX FURRED WALL

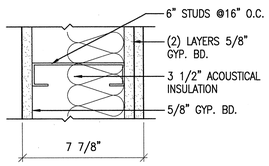

1.22.FH ACOUSTICAL PARTITION

STC 50-54

GA FILE NO. WP 1052

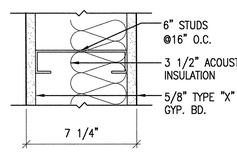

1.02.FH 1HR ACOUSTICAL PARTITION

UL DESIGN U419
GA FILE NO. WP1072

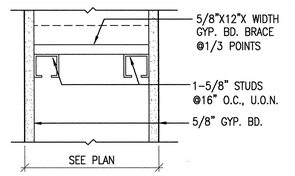

0.21.XX CHASE WALL

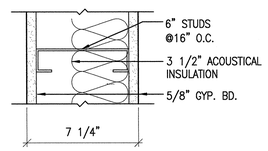

0.14.FH ACOUSTICAL PARTITION

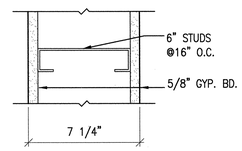

0.07.XX PARTITION

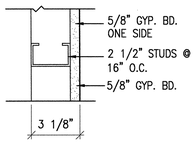

0.02.XX FURRED WALL

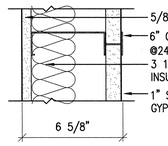

1.03.FH 1HR ACOUSTICAL SHAFT WALL

UL DESIGN U415 (A)
GA FILE NO. WP 7008

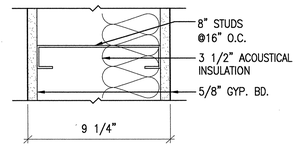

0.15.FH ACOUSTICAL PARTITION

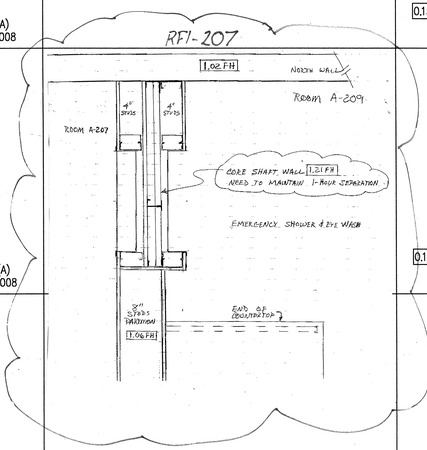

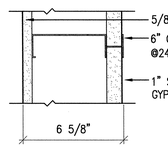

1.04.FH 1HR SHAFT WALL

UL DESIGN U415 (A)
GA FILE NO. WP 7008

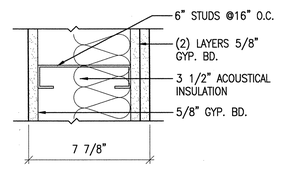

0.16.FH ACOUSTICAL PARTITION

STC 45

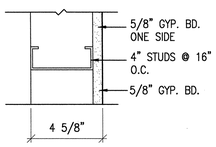

0.04.XX FURRED WALL

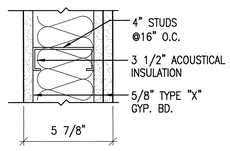

1.05.FH 1HR ACOUSTICAL PARTITION

GA FILE NO. WP 1052

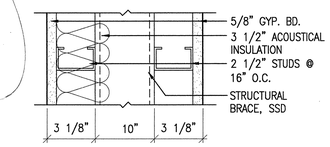

0.17.FH DOUBLE FURRED ACOUSTICAL PARTITION

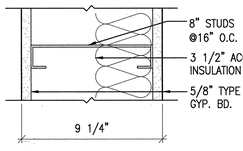

1.06.FH 1-HR ACOUSTICAL PARTITION

UL DESIGN U419
GA FILE NO. WP1072

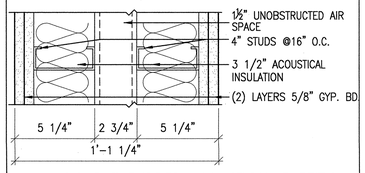

0.18.FH DOUBLE FURRED ACOUSTICAL PARTITION

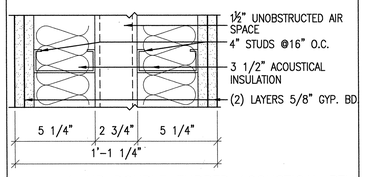

1.07.FH 1-HR DOUBLE FURRED ACOUSTICAL PTN.

UL DESIGN U493

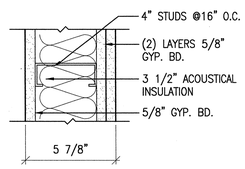

0.19.FH ACOUSTICAL PARTITION

RATING — TYPE — HEIGHT

1.1.FH

RATING	TYPE
0=NONRATED	SEE # DESIGNATIONS
1=1 HOUR	ON THIS SHEET
2=2 HOUR	
3=3 HOUR	
4=4 HOUR	

HEIGHT (XX THIS SHEET = SEE PLANS FOR HEIGHT DESIGNATION)

- FH = FULL HEIGHT PARTITION SEE A10.02 FOR ATTACHMENT TO STRUCTURE.
- FP = FULL HEIGHT PARTITION, EXTEND STUD AND GWB ON ONE SIDE TO STRUCTURE ABOVE AND GWB ON OTHER SIDE TO 6" ABOVE THE CEILING. SEE A10.02 FOR ATTACHMENT TO STRUCTURE.
- PH = PARTIAL HEIGHT PARTITION SEE A10.02 FOR ATTACHMENT TO STRUCTURE.
- PC = PARTIAL HEIGHT PARTITION, EXTEND STUD AND GWB TO 6" ABOVE THE CEILING, BRACE TO STRUCTURE SEE 15/A10.05.
- CH = CEILING HEIGHT PARTITION, EXTEND STUD AND GWB TO THE CEILING, BRACE TO STRUCTURE SEE DETAILS 13 & 14 SHEET A10.05 FOR ATTACHMENT TO STRUCTURE ABOVE.
- LW = LOW WALL (HEIGHT AS INDICATED ON FLOOR PLAN OR IN DETAIL) SEE 6/A10.20 FOR TYP DETAILS.

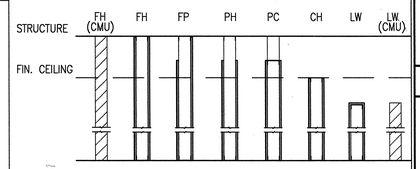

1 PARTITION TYPE LEGEND

SCALE N.T.S. CODE
FILE 09000-00-GS SPEC

APPROVAL STAMP

IDENTIFICATION STAMP
DIVISION OF THE STATE ARCHITECT
APP. NO. 107417
AC FLS SS
DATE: 12/8/05

NO.	ISSUED FOR	DATE
1	DSA APPROVAL SET	12/08/05

LICENSED ARCHITECT ROY S. LAPKO NO. C7256 REN 7-31-06 STATE OF CALIFORNIA CERTIFIED SPECIFICATION WRITER

K M D
KAPLAN McLAUGHLIN DIAZ
ARCHITECTURE PLANNING
222 VALLEJO SAN FRANCISCO, CA 94111
(415) 398-5191 FAX (415) 394-7158

SOLANO COMMUNITY COLLEGE

SCCD
VALLEJO CENTER
Contract # A003.6123.01.V1

PROJECT NO. 419-201
DATE 12-08-05

PARTITION SCHEDULE

AS BUILTS

A10.01

PLOT DATE:

COPYRIGHT © 2004 BY KMD (KAPLAN McLAUGHLIN DIAZ). ALL RIGHTS RESERVED.

PATH: G:\000\000-000\ACAD\SHEETS\

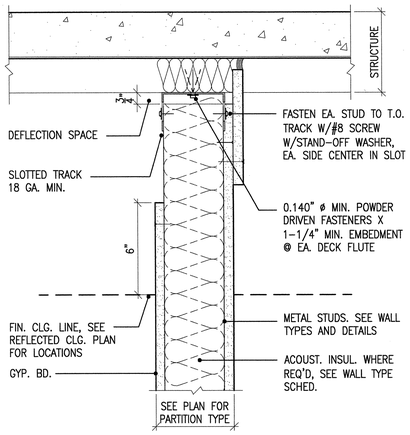

10 FP ACOUST. PTN. AT FLUTES
SCALE 3"=1'-0" CODE CBC 2001
FILE 09250-40B-MS SPEC 0.38 < Ca <= 0.52

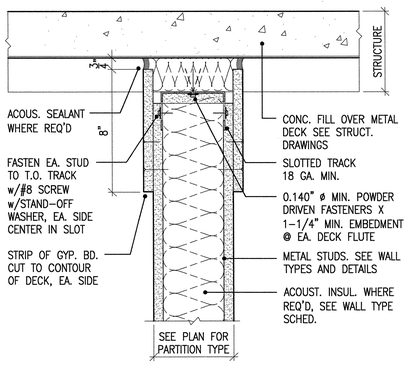

NOTE: NON-RATED PARTITION

7 FH ACOUS. PTN. HEAD AT FLUTES
SCALE 3"=1'-0" CODE CBC 2001
FILE 09250-37B-MS SPEC 0.38 < Ca <= 0.52

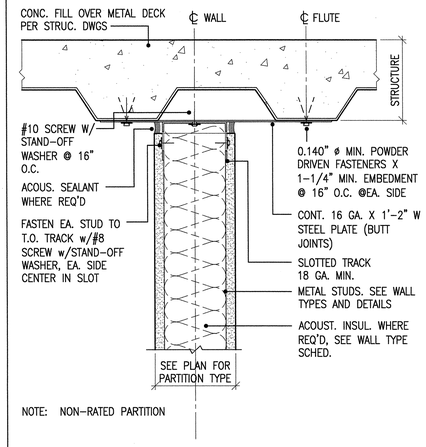

NOTE: NON-RATED PARTITION

4 FH PARTITION PARALLEL TO FLUTES
SCALE 3"=1'-0" CODE CBC 2001
FILE 09250-36B-MS SPEC 0.38 < Ca <= 0.52

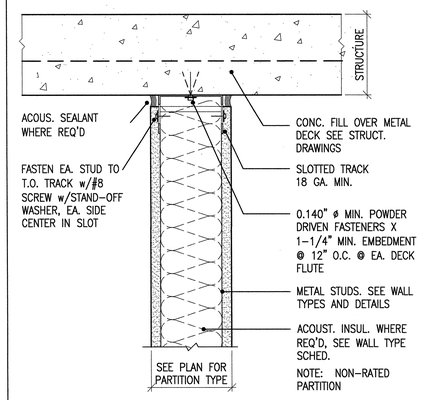

1 FH PARTITION HEAD PERPENDICULAR TO FLUTES
SCALE 3"=1'-0" CODE CBC 2001
FILE 09250-35B-MS SPEC 0.38 < Ca <= 0.52

SHEET NOTES

SEE SHEET A10.05 FOR ADDITIONAL FRAMING INFORMATION ABOVE CEILINGS.

RFI-201

Detail for tops of Second floor walls

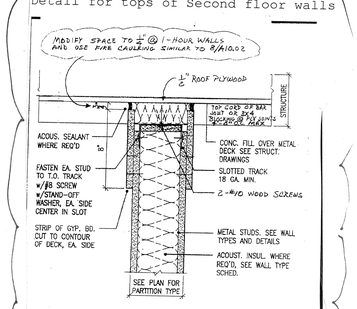

DETAIL FOR TOP ANCHORAGE OF FULL HEIGHT WALLS AT SECOND FLOOR TO ACHIEVE DRAFT STOP, STC & 1HR FIRE RATING

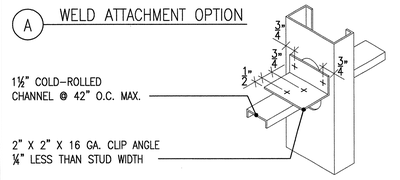

A WELD ATTACHMENT OPTION

B SCREW ATTACHMENT OPTION — 4-5/8" S-12 SCREWS REQUIRED

NOTE: BRIDGING NOT REQ'D FOR FULL HEIGHT PARTITION WHERE GYP. BD. IS USED ON BOTH SIDES OF STUD AND EXTENDS FROM TOP TO BOTTOM OF STUD FRAMING. TYP. BRIDGING AT 4'-0" O.C. FOR ALL OTHER PARTITIONS

11 STEEL STUD LATERAL BRACING
SCALE N.T.S. CODE
FILE 09100-21-MS SPEC

8 1 HR WALL HEAD DETAIL @ 2ND FLOOR CORRIDOR
SCALE 3"=1'-0" CODE
FILE A10.02 FRAMING DETAILS 12/7/05 SPEC

NOTE REFER TO DETAIL 2 THIS SHEET FOR 16 GA PLATE AND FASTENING TO CENTER LINE OF FLUTES FOR FP PARTITION PARALLEL TO FLUTES

5 PH PARTITION PERPENDICULAR TO FLUTES
SCALE 3"=1'-0" CODE CBC 2001
FILE 09250-41B-MS SPEC 0.38 < Ca <= 0.52

NOTE REFER TO DETAIL 2 THIS SHEET FOR 16 GA PLATE AND FASTENING TO CENTER LINE OF FLUTES FOR FP PARTITION PARALLEL TO FLUTES

2 FP PARTITION PERPENDICULAR TO FLUTES
SCALE 3"=1'-0" CODE CBC 2001
FILE 09250-38B-MS SPEC 0.38 < Ca <= 0.52

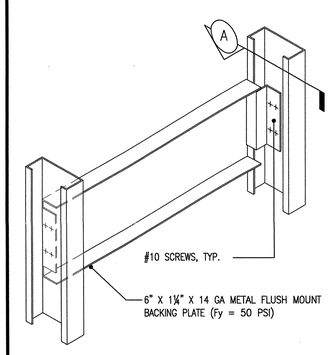

NOTES:

1. TYPE 'C' BACKING PLATE FOR SINKS AND WALL HUNG LAVS.

MAXIMUM WEIGHT:
HEIGHT ZONE A: 200 LBS/FT
HEIGHT ZONE B: 150 LBS/FT

2. VERIFY LENGTH, HEIGHT, LOCATION OF BACKING PLATE AND NUMBER REQUIRED WITH ACCESSORY MANUFACTURERS.

3. FOR TYPE 'C' BACKING PLATES, STUDS ARE AT 12" O.C., U.O.N.

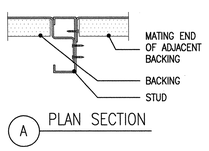

A PLAN SECTION

WALL STUD SIZES FOR BACKING PLATE DETAILS, TYPE 'C'			
BLDG HEIGHT ZONE	14' WALL	16' WALL	17' WALL
	1 HR WALL & NON RATED	1 HR WALL & NON RATED	1 HR WALL & NON RATED
B	400S200-16 AT 8" OC	400S200-16 AT 8" OC	400S200-16 AT 8" OC
A	400S162-18	400S200-16	400S200-16

12 PRE-MANUFACTURED BACKING PLATE - OPTIONAL
SCALE N.T.S. CODE CBC 2001
FILE 09250-16B-MS SPEC Ca ≤ 0.38

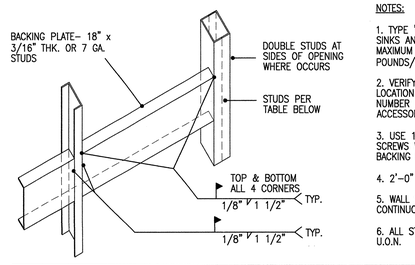

NOTES:

1. TYPE 'C' BACKING PLATE FOR SINKS AND WALL HUNG LAVS. MAXIMUM WEIGHT - 200 POUNDS/FOOT

2. VERIFY LENGTH, HEIGHT, LOCATION OF BACKING PLATE AND NUMBER REQUIRED WITH ACCESSORY MANUFACTURERS.

3. USE 1/4" SELF TAPPING (TEKS) SCREWS WHEN ATTACHING ITEMS TO BACKING PLATE.

4. 2'-0" BACKING PLATE AT SINK.

5. WALL STUD FLANGES ARE CONTINUOUS

6. ALL STUDS ARE AT 12" O.C., U.O.N.

SHAFT WALL STUD SIZES FOR TYPE 'C' BACKER PLATES			
BLDG HEIGHT ZONE	14' TALL PARTITION	16' PARTITION	17' PARTITION
	1 HR WALL & NON RATED	1 HR WALL & NON RATED	1 HR WALL & NON RATED
B	2-600ES20	600CH20 *	600CH *
A	600CH20	2-600ES20	2-600ES20

* THERE ARE NO STANDARD SHAFT WALL STUDS WHICH WORK FOR THIS CONDITION. ADD SECONDARY TALL PARTITIONS USING STANDARD STUDS, PER THE TYPE 'C' BACKING PLATE DETAIL.

WALL STUD SIZES FOR BACKER PLATE DETAILS, TYPE 'C'			
BLDG HEIGHT ZONE	14' WALL	16' WALL	17' WALL
	1 HR WALL & NON RATED	1 HR WALL & NON RATED	1 HR WALL & NON RATED
B	400S162-18	400S200-16	400S200-16
A	400S137-18	400S137-18	400S137-18

9 BACKING PLATE, TYPE 'C'
SCALE N.T.S. CODE CBC 2001
FILE 09250-15B-MS SPEC 0.38 < Ca <= 0.52

SEE RFI-115A

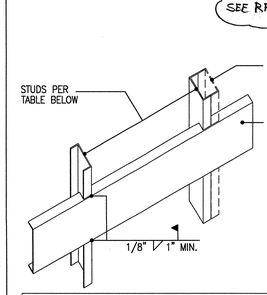

NOTES:

1. TYPE 'B' BACKING PLATE FOR UPPER WALL HUNG CABINETS (UP TO 2 SHELVES), BASE CABINETS, SHELVING TO 7'-0", WALL HUNG BENCHES, HANDRAILS, ETC. MAX. WEIGHT - 100 LBS/FT

2. VERIFY LENGTH, HEIGHT, LOCATION OF BACKING PLATE AND NUMBER REQUIRED WITH ACCESSORY MANUFACTURERS.

3. USE #12 SELF TAPPING SHEET METAL SCREWS WHEN ATTACHING ITEMS TO BACKING PLATE.

4. WALL STUD FLANGES ARE CONTINUOUS.

5. ALL STUDS ARE 12" O.C.

SHAFT WALL STUDS WITH TYPE 'B' BACKING PLATE			
BLDG HEIGHT ZONE	14' TALL PARTITION	16' PARTITION	17' PARTITION
	1 HR WALL & NON RATED	1 HR WALL & NON RATED	1 HR WALL & NON RATED
B	600CH20	600CH20	600CH20
A			

WALL STUD SIZES FOR BACKING PLATE DETAILS, TYPE 'B'			
BLDG HEIGHT ZONE	14' WALL	16' WALL	17' WALL
	1 HR WALL & NON RATED	1 HR WALL & NON RATED	1 HR WALL & NON RATED
B	400S137-20	400S137-20	400S162-20
A			400S137-20

6 BACKING PLATE, TYPE 'B'
SCALE N.T.S. CODE CBC 2001
FILE 09250-14B-MS SPEC 0.38 < Ca <= 0.52

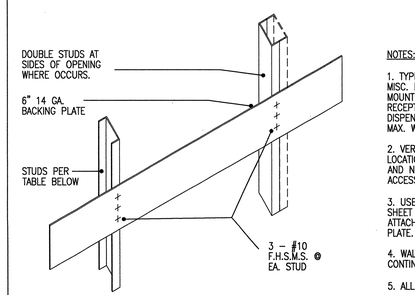

NOTES:

1. TYPE 'A' BACKING PLATE FOR MISC. ITEMS, I.E., SURFACE MOUNTED MIRRORS, WASTE RECEPTACLES, TOWEL DISPENSERS, EQUIPMENT, ETC. MAX. WEIGHT - 50 POUNDS

2. VERIFY LENGTH, HEIGHT, LOCATION OF BACKING PLATE AND NUMBER REQUIRED WITH ACCESSORY MANUFACTURERS.

3. USE #12 SELF TAPPING SHEET METAL SCREWS WHEN ATTACHING ITEMS TO BACKING PLATE.

4. WALL STUD FLANGES ARE CONTINUOUS.

5. ALL STUDS ARE 16" O.C.

SHAFT WALL STUDS WITH TYPE 'A' BACKING PLATE			
BLDG HEIGHT ZONE	14' TALL PARTITION	16' PARTITION	17' PARTITION
	1 HR WALL & NON RATED	1 HR WALL & NON RATED	1 HR WALL & NON RATED
A, B	600CH20	600CH20	600CH20

WALL STUD SIZES FOR BACKING PLATE DETAILS, TYPE 'A'			
BLDG HEIGHT ZONE	14' WALL	16' WALL	17' WALL
	1 HR WALL & NON RATED	1 HR WALL & NON RATED	1 HR WALL & NON RATED
B	400S137-20	400S137-20	400S137-20
A			

3 BACKING PLATE TYPE 'A'
SCALE N.T.S. CODE CBC 2001
FILE 09250-13B-MS SPEC 0.38 < Ca <= 0.52

APPROVAL STAMP
IDENTIFICATION STAMP
DIVISION OF THE STATE ARCHITECT
APP. 02- 107417
ACC FLS FH SS
DATE: 12/21/05

NO.	ISSUED FOR	DATE
1	DSA APPROVAL SET	12/08/05

LICENSED ARCHITECT
ROY S. LAPAS
NO. C7256
REN. 7-31-06
STATE OF CALIFORNIA
CERTIFIED

K M D
KAPLAN McLAUGHLIN DIAZ
ARCHITECTURE PLANNING
222 VALLEJO SAN FRANCISCO, CA 94111
(415) 398-5191 FAX (415) 394-7158

SOLANO COMMUNITY COLLEGE

SCCD
VALLEJO CENTER
Contract # A003.6123.01.V1

PROJECT NO. 419-201
DATE 12-08-05

FRAMING DETAILS
CODE: CBC 2001
SPEC: 0.38 < Ca <= 0.52
AS BUILTS

A10.02

PLOT DATE:

COPYRIGHT © 2004 BY KMD (KAPLAN McLAUGHLIN DIAZ). ALL RIGHTS RESERVED.

PATH: G:\000\000-000\ACAD\SHEETS\

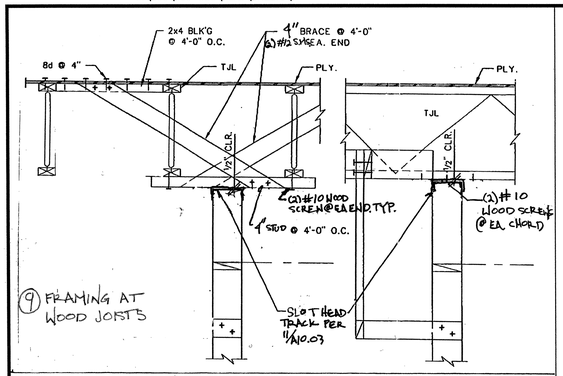

9 FRAMING AT WOOD JOISTS

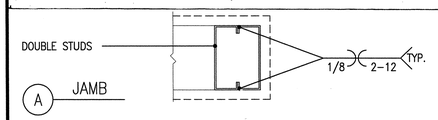

A JAMB

JAMB STUD SIZES FOR UTILITY OPENINGS > 4'-0" TO 8'-0" WIDE			
	14' WALL	16' WALL	17' WALL
	1 HR WALL & NON RATED	1 HR WALL & NON RATED	1 HR WALL & NON RATED
	2-400S162-18	2-400S162-18	2-400S162-18

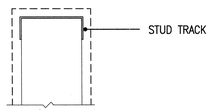

B SILL

SILL STUD SIZES FOR UTILITY OPENINGS > 4'-0" TO 8'-0" WIDE			
	14' WALL	16' WALL	17' WALL
	1 HR WALL & NON RATED	1 HR WALL & NON RATED	1 HR WALL & NON RATED
	400T125-20	400T125-20	400T150-18

7 FRAMING FOR UTILITY OPENINGS > 4'-0" TO 8'-0" WIDE
SCALE 3"=1'-0" CODE CBC 2001
FILE 09250-49B-MS SPEC 0.38 < Ca <= 0.52

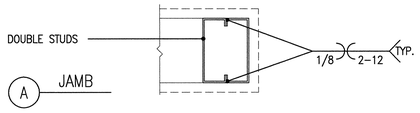

A JAMB

JAMB STUD SIZES FOR UTILITY OPENINGS UP TO 4'-0" WIDE			
	14' WALL	16' WALL	17' WALL
	1 HR WALL & NON RATED	1 HR WALL & NON RATED	1 HR WALL & NON RATED
	2-400S137-20	2-400S162-18	2-400S162-18

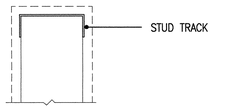

B SILL

SILL STUD SIZES FOR UTILITY OPENINGS UP TO 4'-0" WIDE			
	14' WALL	16' WALL	17' WALL
	1 HR WALL & NON RATED	1 HR WALL & NON RATED	1 HR WALL & NON RATED
	400T125-20	400T125-20	400T125-20

5 FRAMING FOR UTILITY OPENINGS UP TO 4'-0" WIDE
SCALE 3"=1'-0" CODE CBC 2001
FILE 09250-48B-MS SPEC 0.38 < Ca <= 0.52

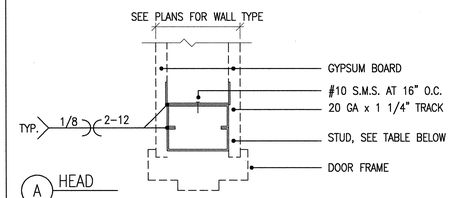

A HEAD

HEADER STUD SIZES FOR DOORS > 4'-0" TO 8'-0" WIDE			
	14' WALL	16' WALL	17' WALL
	1 HR WALL & NON-RATED	1 HR WALL & NON-RATED	1 HR WALL & NON-RATED
	2-400S162-18	2-400S162-18	2-400S162-18

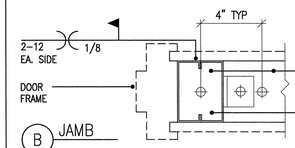

B JAMB

JAMB STUD SIZES FOR DOORS > 4'-0" TO 8'-0" WIDE			
	14' WALL	16' WALL	17' WALL
	1 HR WALL & NON-RATED	1 HR WALL & NON-RATED	1 HR WALL & NON-RATED
	2-400S137-20	2-400S137-20	2-400S162-18

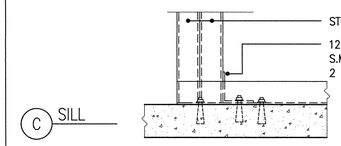

C SILL

3 FRAMING FOR DOORS > 4'-0" TO 8'-0" WIDE
SCALE 3"=1'-0" CODE CBC 2001
FILE 09100-18B-MS SPEC 0.38 < Ca <= 0.52

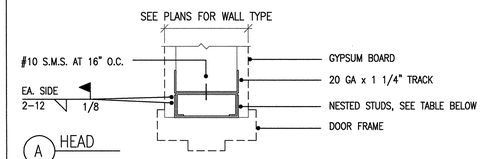

A HEAD

HEADER STUD SIZES FOR DOORS UP TO 4'-0" WIDE			
	14' WALL	16' WALL	17' WALL
	1 HR WALL & NON RATED	1 HR WALL & NON RATED	1 HR WALL & NON RATED
	400S137-20 + 400T125-20	400S137-20 + 400T125-20	400S137-20 + 400T125-20

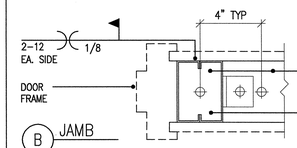

B JAMB

JAMB STUD SIZES FOR DOORS UP TO 4'-0" WIDE			
	14' WALL	16' WALL	17' WALL
	1 HR WALL & NON RATED	1 HR WALL & NON RATED	1 HR WALL & NON RATED
	2-400S137-20	2-400S137-20	2-400S137-20

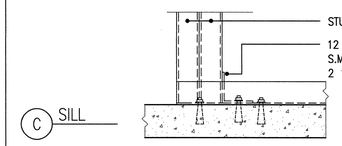

C SILL

1 FRAMING FOR DOORS UP TO 4'-0" WIDE
SCALE 3"=1'-0" CODE CBC 2001
FILE 09100-17B-MS SPEC 0.38 < Ca <= 0.52

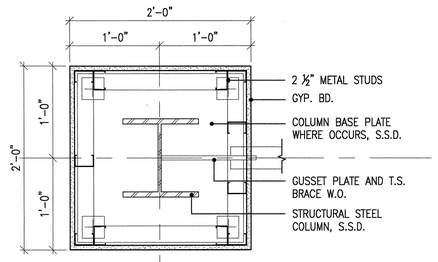

A BRACE FRAME COLUMN

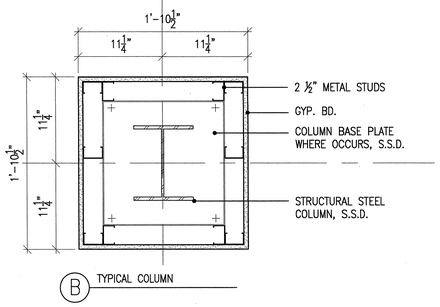

B TYPICAL COLUMN

8 TYP. COLUMN FURRING
SCALE 1 1/2" = 1'-0" CODE
FILE A-DTIN-56 SPEC
12/6/05

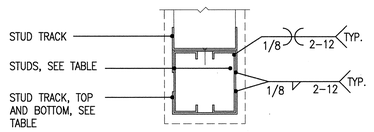

A HEAD

HEADER STUD SIZES FOR PARTITION OPENINGS > 8'-0" TO 18'-4" WIDE (RFI-188)			
	14' WALL	16' WALL	17' WALL
	1 HR WALL & NON RATED	1 HR WALL & NON RATED	1 HR WALL & NON RATED
	2-400S137-18 + 2-400T125-18	2-400S137-18 + 2-400T125-18	2-600S200-16 + 2-400T125-16

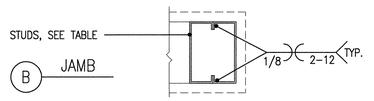

B JAMB

JAMB STUD SIZES FOR PARTITION OPENINGS > 8'-0" TO 14'-0" WIDE			
	14' WALL	16' WALL	17' WALL
	1 HR WALL & NON RATED	1 HR WALL & NON RATED	1 HR WALL & NON RATED
	2-400S162-18	2-400S200-16	2-400S200-16

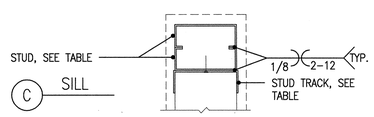

C SILL

STUD SIZES FOR SILLS AT OPENINGS > 8'-0" TO 14'-0" WIDE			
	14' WALL	16' WALL	17' WALL
	1 HR WALL & NON RATED	1 HR WALL & NON RATED	1 HR WALL & NON RATED
	2-400S137-20	2-400S137-20	2-400S137-20

6 FRAMING FOR PARTITION OPENINGS > 8'-0" TO 14'-0" WIDE
SCALE N.T.S. CODE CBC 2001
FILE 09100-15B-MS SPEC 0.38 < Ca <= 0.52

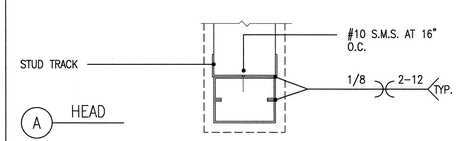

A HEAD

HEADER STUD SIZES FOR OPENINGS > 4'-0" TO 8'-0" WIDE			
	14' WALL	16' WALL	17' WALL
	1 HR WALL & NON RATED	1 HR WALL & NON RATED	1 HR WALL & NON RATED
	2-400S162-18	2-400S162-18	2-400S162-18

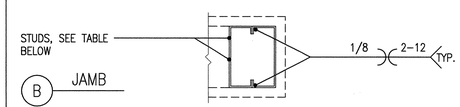

B JAMB

JAMB STUD SIZES FOR OPENINGS > 4'-0" TO 8'-0" WIDE			
	14' WALL	16' WALL	17' WALL
	1 HR WALL & NON RATED	1 HR WALL & NON RATED	1 HR WALL & NON RATED
	2-400S137-20	2-400S162-18	2-400S162-18

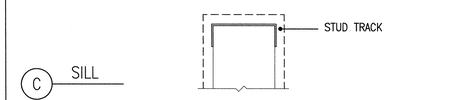

C SILL

SILL STUD SIZES FOR OPENINGS > 4'-0" TO 8'-0" WIDE			
	14' WALL	16' WALL	17' WALL
	1 HR WALL & NON RATED	1 HR WALL & NON RATED	1 HR WALL & NON RATED
	400T125-20	400T125-20	400T125-20

4 FRAMING FOR PARTITION OPENINGS > 4'-0" TO 8'-0" WIDE
SCALE 3"=1'-0" CODE CBC 2001
FILE 09100-14B-MS SPEC 0.38 < Ca <= 0.52

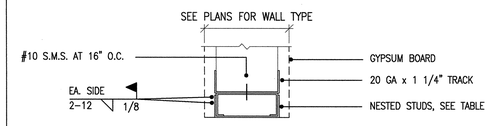

A HEAD

HEADER STUD SIZES FOR OPENINGS UP TO 4'-0" WIDE			
	14' WALL	16' WALL	17' WALL
	1 HR WALL & NON RATED	1 HR WALL & NON RATED	1 HR WALL & NON RATED
	400S137-20 + 400T125-20	400S137-20 + 400T125-20	400S137-20 + 400T125-20

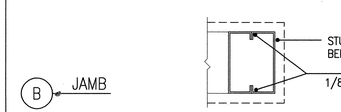

B JAMB

JAMB STUD SIZES FOR OPENINGS UP TO 4'-0" WIDE			
	14' WALL	16' WALL	17' WALL
	1 HR WALL & NON RATED	1 HR WALL & NON RATED	1 HR WALL & NON RATED
	2-400S137-20	2-400S137-20	2-400S137-20

C SILL

SILL STUD SIZES FOR OPENINGS UP TO 4'-0" WIDE			
	14' WALL	16' WALL	17' WALL
	1 HR WALL & NON RATED	1 HR WALL & NON RATED	1 HR WALL & NON RATED
	400T125-20	400T125-20	400T125-20

2 FRAMING FOR PARTITION OPENINGS UP TO 4'-0" WIDE
SCALE 3"=1'-0" CODE CBC 2001
FILE 09100-13B-MS SPEC 0.38 < Ca <= 0.52

APPROVAL STAMP
IDENTIFICATION STAMP
DIVISION OF THE STATE ARCHITECT
APP'D- 107417
AC FLS SS
DATE: 12/21/05

NO.	ISSUED FOR	DATE
1	DSA APPROVAL SET	12/08/05

LICENSED ARCHITECT ROY S. LAPLEY NO. C7256 REN. 7-31-07 STATE OF CALIFORNIA CERTIFIED

K M D
KAPLAN McLAUGHLIN DIAZ
ARCHITECTURE PLANNING
222 VALLEJO SAN FRANCISCO, CA 94111
(415) 398-5191 FAX (415) 394-7158

SOLANO COMMUNITY COLLEGE

SCCD
VALLEJO CENTER
Contract # A003.6123.01.V1

PROJECT NO. 419-201
DATE 12-08-05

INTERIOR FRAMING DETAILS
AS BUILTS

A10.04

PLOT DATE:

COPYRIGHT © 2004 BY KMD (KAPLAN McLAUGHLIN DIAZ). ALL RIGHTS RESERVED.

PATH: G:\000\000-000\ACAD\SHEETS\

SEE DRAWING A4.12 FOR CEILING WIRE CONNECTION AT METAL DECKING WITHOUT CONCRETE FILL RFI-089

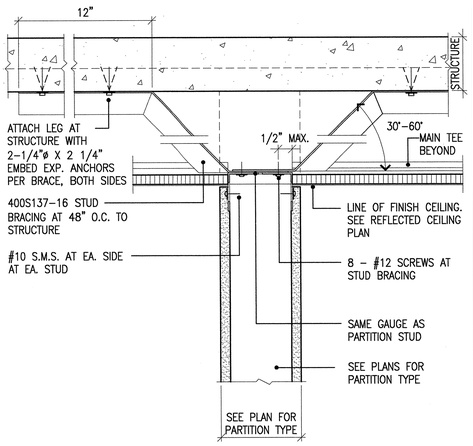

13 HEAD AT CEILING HEIGHT PARTITION
SCALE 3"=1'-0" CODE CBC 2001
FILE 09000-05-MS SPEC ALL Ca

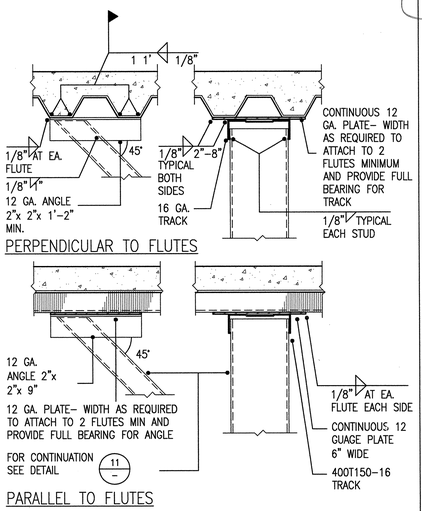

10 CEILING STUDS AT METAL DECK
SCALE 3"=1'-0" CODE CBC 2001
FILE 09120-25B-MS SPEC 0.38 < Ca <= 0.52

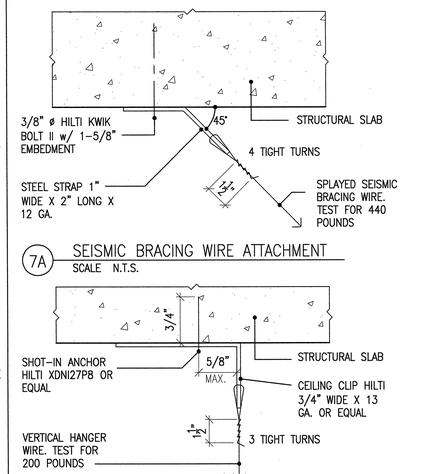

7A SEISMIC BRACING WIRE ATTACHMENT
SCALE N.T.S.

7 VERTICAL HANGER WIRE ATTACHMENT
SCALE N.T.S. CODE
FILE 09120-44-MS SPEC

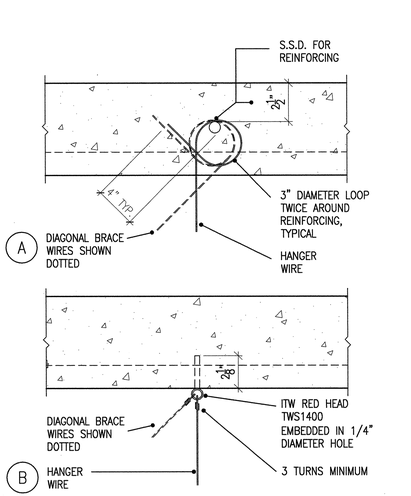

4 HANGER WIRES- CONTRACTOR'S OPTIONS
SCALE 3"=1'-0" CODE
FILE 09120-28-MS SPEC

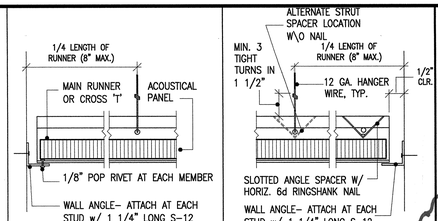

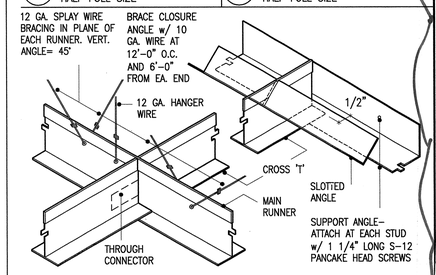

1 ISOMETRIC AT EXP. JOINT - CEILING PERIMETER
SCALE N.T.S. CODE
FILE 09120-12-MS SPEC

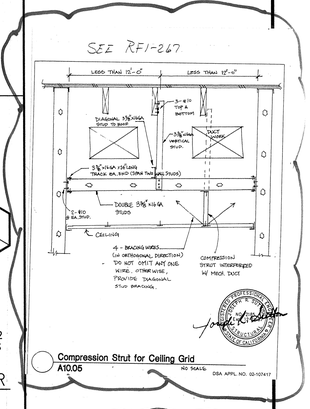

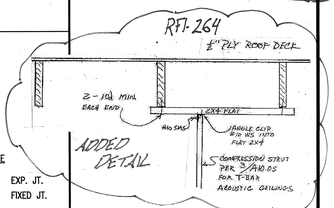

NOTE : ALL SUSPENDED CEILING GRID SYSTEMS RATED AS "HEAVY DUTY".

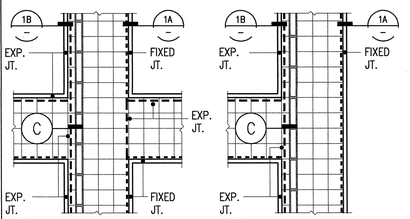

5 EXPANSION JOINT DETAIL @ EXITWAYS
SCALE N.T.S. CODE CBC 2001
FILE 09120-04-MS SPEC

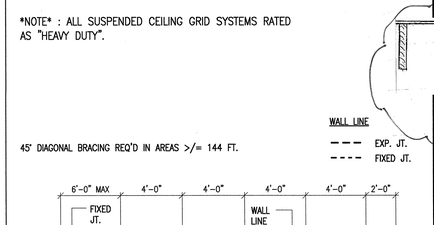

2 TYP. DIAGRAMMATIC PLAN: SUSPENDED CEILING
SCALE 1/4"=1'-0" CODE
FILE 09120-03-MS SPEC

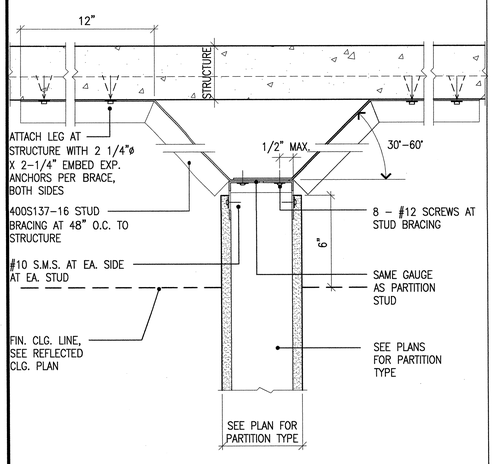

15 HEAD AT PC PARTITION
SCALE 3"=1'-0" CODE CBC 2001
FILE 09000-04-MS SPEC ALL Ca

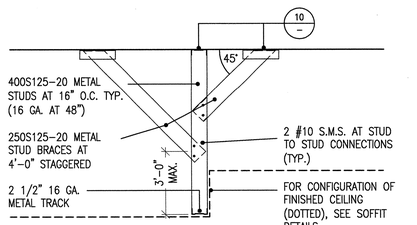

11A SOFFIT FRAMING WITH SINGLE HANGER
SCALE N.T.S.

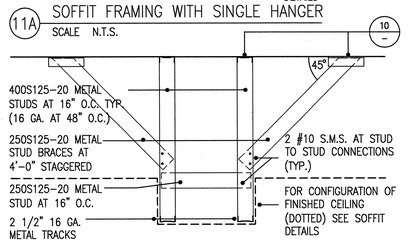

11 SOFFIT FRAMING WITH DOUBLE HANGER
SCALE 3"=1'-0" CODE CBC 2001
FILE 09120-23B-MS SPEC 0.38 < Ca <= 0.52

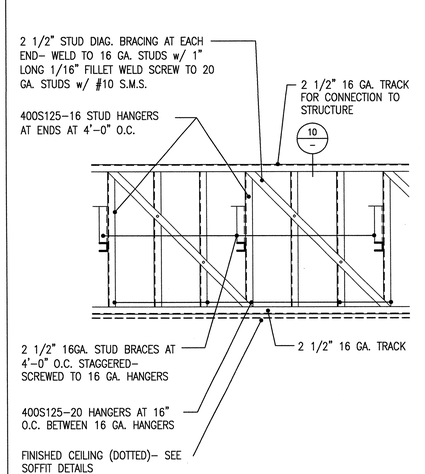

8 SOFFIT FRAMING ELEVATION, TYPICAL
SCALE 3"=1'-0" CODE CBC 2001
FILE 09120-27B-MS SPEC 0.38 < Ca <= 0.52

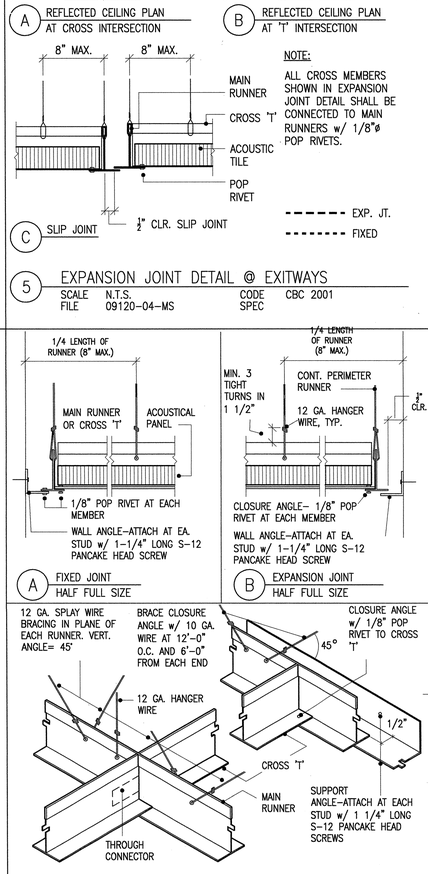

6 ISOMETRIC AT EXP. JOINT - EXITWAYS
SCALE N.T.S. CODE CBC 2001
FILE 09120-12A-MS SPEC

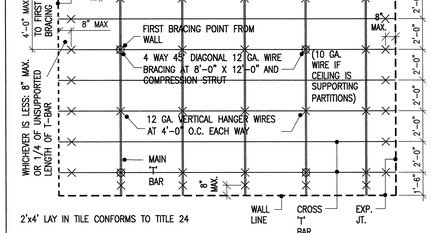

COMPRESSION POST SCHEDULE		
MAX. LENGTH	MEMBER "A"	MEMBER "B"
6'-6"	1" O.D. EMT	1 1/4" O.D. EMT
8'-6"	1 1/4" O.D. EMT	1 1/2" O.D. EMT

3 COMPRESSION STRUT
SCALE N.T.S. CODE 2001 CBC
FILE 09120-40-MS SPEC

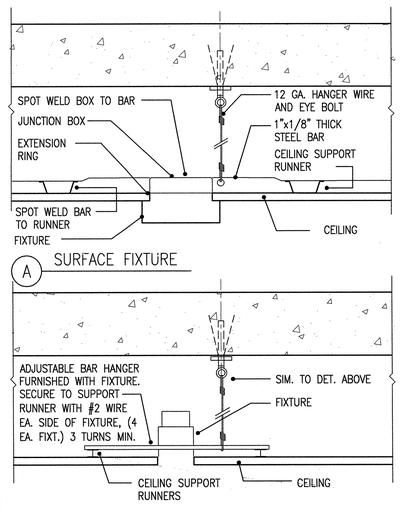

12 RECESSED FIXTURE
SCALE 3"=1'-0" CODE
FILE 09120-16-MS SPEC

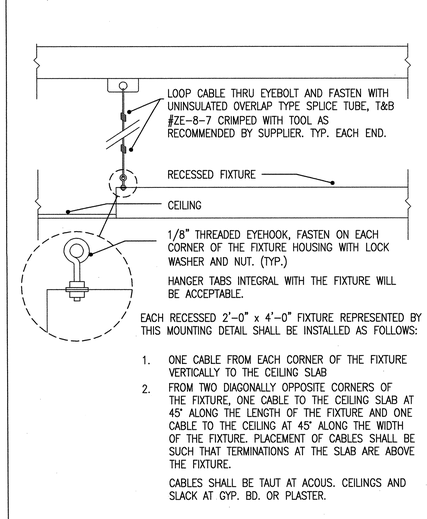

EACH RECESSED 2'-0" x 4'-0" FIXTURE REPRESENTED BY THIS MOUNTING DETAIL SHALL BE INSTALLED AS FOLLOWS:

1. ONE CABLE FROM EACH CORNER OF THE FIXTURE VERTICALLY TO THE CEILING SLAB
2. FROM TWO DIAGONALLY OPPOSITE CORNERS OF THE FIXTURE, ONE CABLE TO THE CEILING SLAB AT 45° ALONG THE LENGTH OF THE FIXTURE AND ONE CABLE TO THE CEILING AT 45° ALONG THE WIDTH OF THE FIXTURE. PLACEMENT OF CABLES SHALL BE SUCH THAT TERMINATIONS AT THE SLAB ARE ABOVE THE FIXTURE.

CABLES SHALL BE TAUT AT ACOUS. CEILINGS AND SLACK AT GYP. BD. OR PLASTER.

9 RECESSED FLOURESCENT LIGHT MOUNTING
SCALE 3"=1'-0" CODE
FILE 09120-15-MS SPEC

APPROVAL STAMP
IDENTIFICATION STAMP
DIVISION OF THE STATE ARCHITECT
APP. NO. 107417
AC FLS FH SS RC
DATE: 12/21/05

NO.	ISSUED FOR	DATE
1	DSA APPROVAL SET	12/08/05

LICENSED ARCHITECT ROY S. LAPKA No. C7256 REN. 7-31-07 STATE OF CALIFORNIA
CERTIFIED

K M D
KAPLAN McLAUGHLIN DIAZ
ARCHITECTURE PLANNING
222 VALLEJO SAN FRANCISCO, CA 94111
(415) 398-5191 FAX (415) 394-7158

SOLANO COMMUNITY COLLEGE

SCCD
VALLEJO CENTER
Contract # A003.6123.01.V1

PROJECT NO. 419-201
DATE 12-08-05

CEILING DETAILS
CODE: CBC 2001
SPEC: 0.38 < Ca <= 0.52
AS BUILTS

A10.05

PLOT DATE:

COPYRIGHT © 2004 BY KMD (KAPLAN McLAUGHLIN DIAZ). ALL RIGHTS RESERVED.

PATH: C:\000\000-000\ACAD\SHEETS\

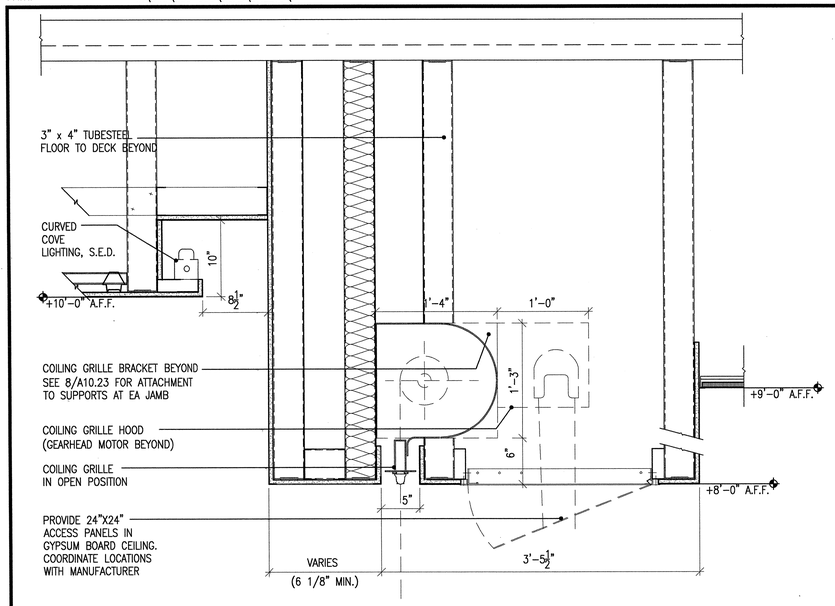

13 OVERHEAD COILING GRILLE HEAD
SCALE 1 1/2" = 1'-0" CODE
FILE A10.06 CEILING DETAILS SPEC
11/14/05

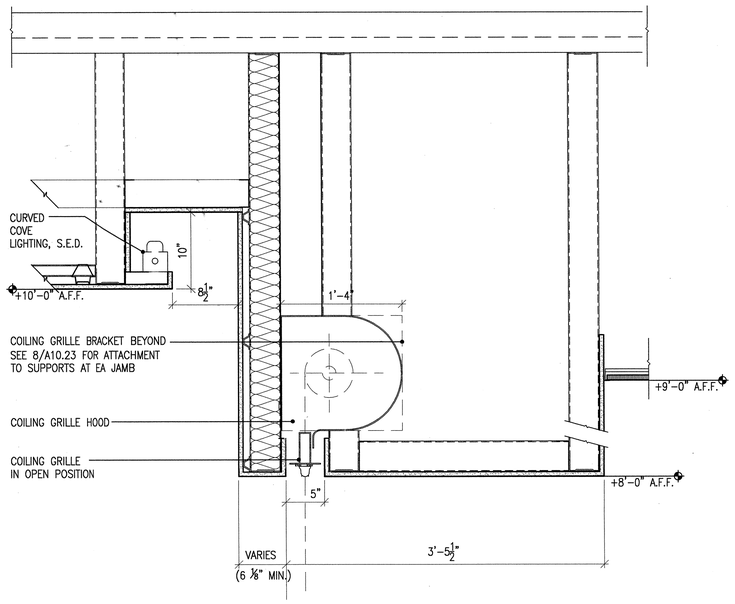

14 OVERHEAD COILING GRILLE HEAD
SCALE 1 1/2" = 1'-0" CODE
FILE A10.06 CEILING DETAILS SPEC
11/14/05

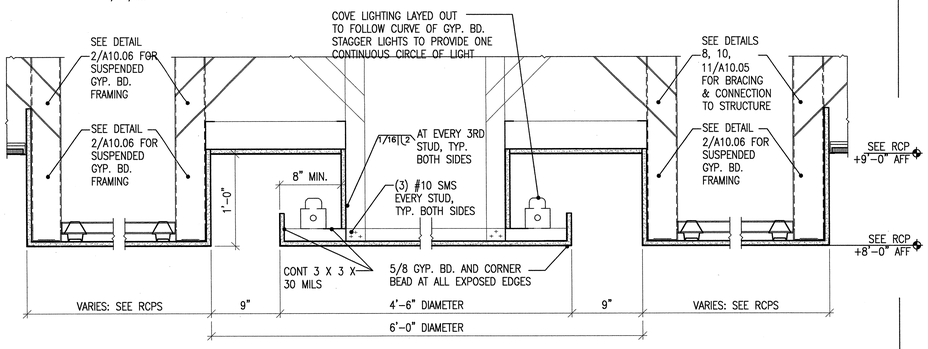

15 G.W.B. CEILING AT CURVED LIGHT COVE FIXTURE
SCALE CODE
FILE A10.06 CEILING DETAILS SPEC
11/14/05

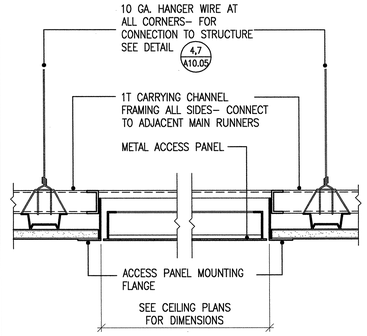

7 ACCESS PANEL IN G.W.B. CEILING
SCALE 3"=1'-0" CODE
FILE 09120-30-GS SPEC

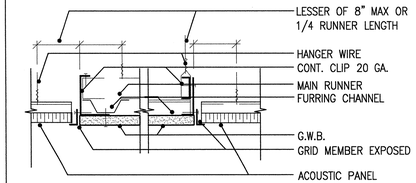

8 ACOUSTIC TILE TO GYPSUM BOARD CEILING FLUSH
SCALE 3"=1'-0" CODE
FILE A10.06 CEILING DETAILS SPEC
11/14/05

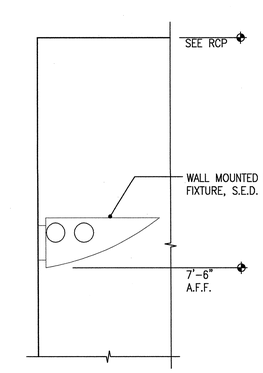

9 WALL MNTD. LIGHT FIXTURE @ HALLWY/CRDR.
SCALE 3"=1'-0" CODE
FILE A10.06 CEILING DETAILS SPEC
11/14/05

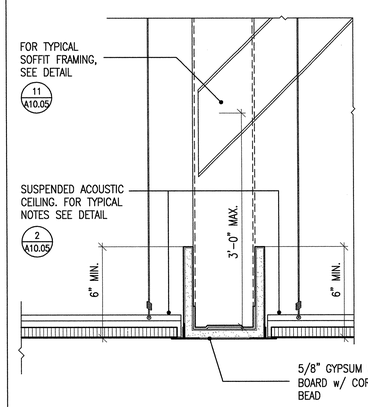

4 G.W.B. SOFFIT AT SUSPENDED CEILING
SCALE 3"=1'-0" CODE
FILE 09120-19-GS SPEC

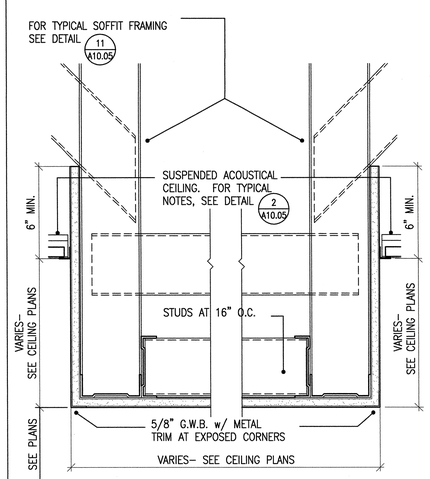

5 G.W.B. SOFFIT AT SUSPENDED CEILING
SCALE 3"=1'-0" CODE
FILE 09120-22-GS SPEC

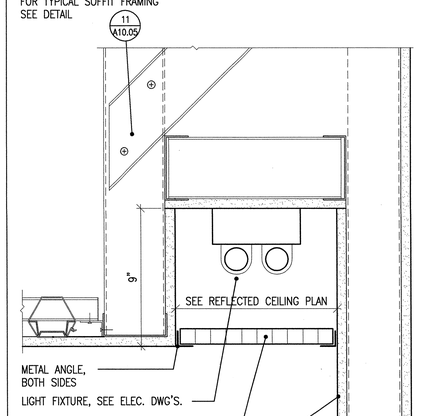

6 RECESSED STRIP LIGHTING IN GYP. BD. CEILING
SCALE 3"=1'-0" CODE
FILE 09120-16-GS SPEC

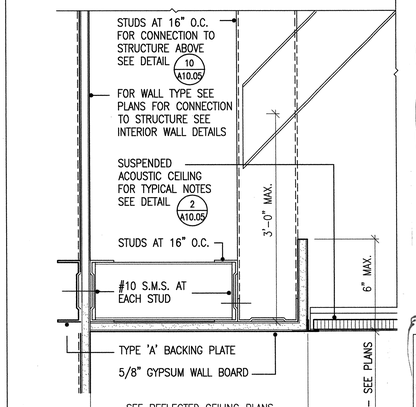

1 G.W.B. SOFFIT AT SUSPENDED CEILING
SCALE 3"=1'-0" CODE
FILE 09120-40 SPEC

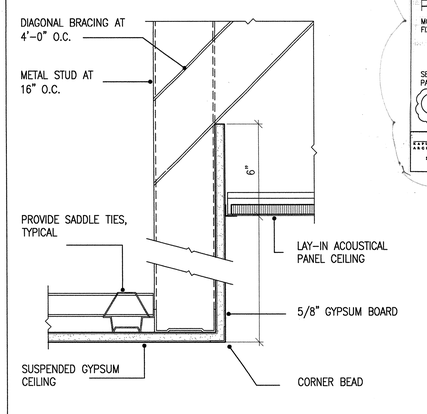

2 SUSPENDED CEILING AT G.W.B. CEILING
SCALE 3"=1'-0" CODE
FILE 09120-08-GS SPEC

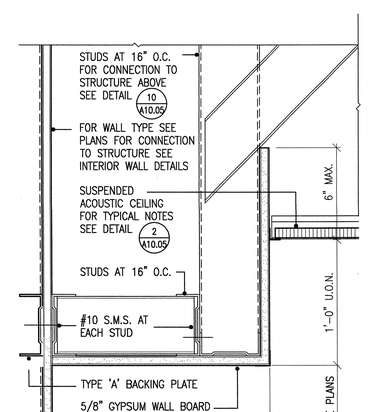

3 G.W.B. SOFFIT AT SUSPENDED CEILING
SCALE 3"=1'-0" CODE
FILE 09120-17-GS SPEC

RFI-187A

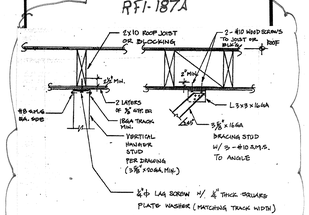

APPROVED
DIV. OF THE STATE ARCHITECT
SACRAMENTO REGIONAL OFFICE
AC ____ FLS ____ SS ____
APP.# 107417
DATE 11/30/05

15 LIGHT FIXTURE SUPPORT & BRACING
A10.06
DSA APPL. NO. 03-107417

RFI 189
Type F7 & F8

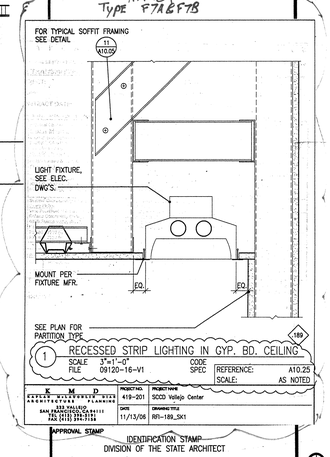

1 RECESSED STRIP LIGHTING IN GYP. BD. CEILING
SCALE 3"=1'-0" CODE
FILE 09120-16-V1 SPEC
REFERENCE: A10.25
SCALE: AS NOTED

D	PROJECTNO. 419-201	SUBSTRATE SCCD Vallejo Center
KMD ARCHITECTURE 222 VALLEJO SAN FRANCISCO, CA 94111 TEL (415) 398-5191 FAX (415) 394-7158	DATE 11/13/06	DRAWING TITLE RFI-189_SK1

APPROVAL STAMP
IDENTIFICATION STAMP
DIVISION OF THE STATE ARCHITECT
APP.# 107417
AC ____ FLS ____ SS ____
DATE: 12/21/05

NO.	ISSUED FOR	DATE
1	DSA APPROVAL SET	12/08/05

LICENSED ARCHITECT ROY S. LADD NO. C7256 REN. 7-31-06 STATE OF CALIFORNIA
CERTIFIED BY

K M D
KAPLAN McLAUGHLIN DIAZ
ARCHITECTURE PLANNING
222 VALLEJO SAN FRANCISCO, CA 94111
(415) 398-5191 FAX (415) 394-7158

SOLANO COMMUNITY COLLEGE

SCCD
VALLEJO CENTER
Contract # A003.6123.01.V1

PROJECT NO.	DATE
419-201	12-08-05

CEILING DETAILS
AS BUILTS

A10.06

PLOT DATE:

COPYRIGHT © 2004 BY KMD (KAPLAN McLAUGHLIN DIAZ). ALL RIGHTS RESERVED.

PATH: G:\000\000-000\ACAD\SHEETS\

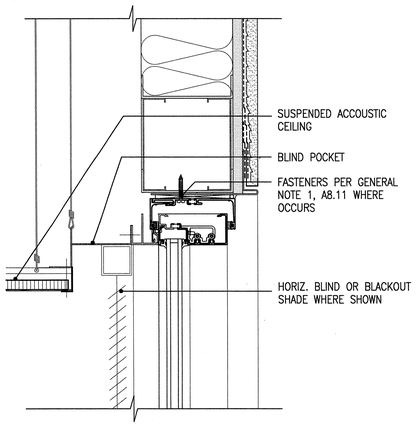

13 CEILING DETAIL AT SECOND FLOOR
SCALE 3"=1'-0" CODE
FILE A10.07 CEILING DETAILS SPEC
12/9/05

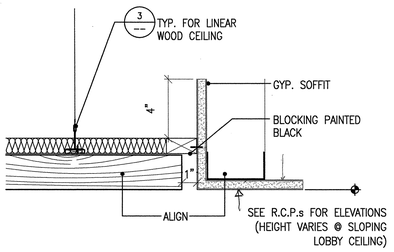

10 LINEAR WOOD CEILING AT G.W.B. SOFFIT
SCALE 3"=1'-0" CODE
FILE A10.07 CEILING DETAILS SPEC
12/9/05

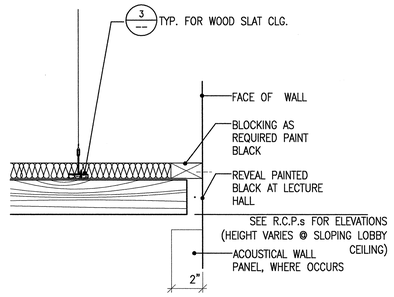

7 LINEAR WOOD CEILING AT WALL
SCALE 3"=1'-0" CODE
FILE A10.07 CEILING DETAILS SPEC
12/9/05

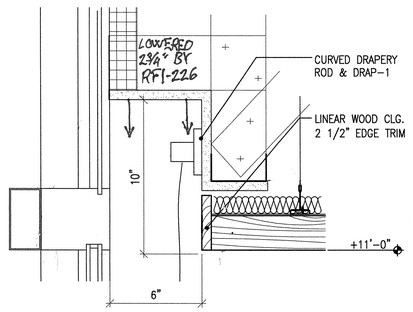

4 LINEAR WOOD CEILING @ CURVED WALL
SCALE 3"=1'-0" CODE
FILE A10.07 CEILING DETAILS SPEC
12/9/05

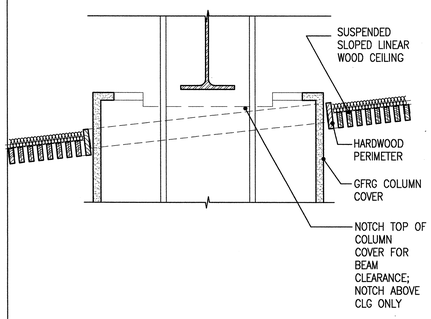

1 COLUMN COVER AT SLOPED LINEAR WOOD CEILING
SCALE 1 1/2" = 1'-0" CODE
FILE A10.07 CEILING DETAILS SPEC
12/9/05

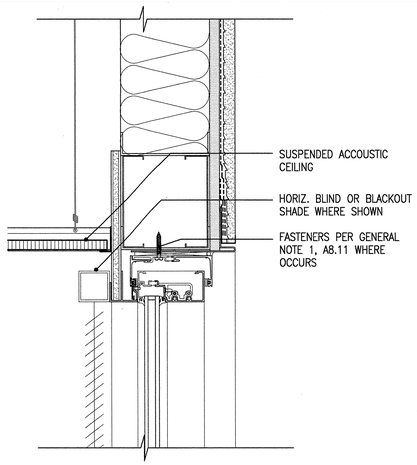

14 CEILING DETAIL AT FIRST FLOOR
SCALE 3"=1'-0" CODE
FILE A10.07 CEILING DETAILS SPEC
12/9/05

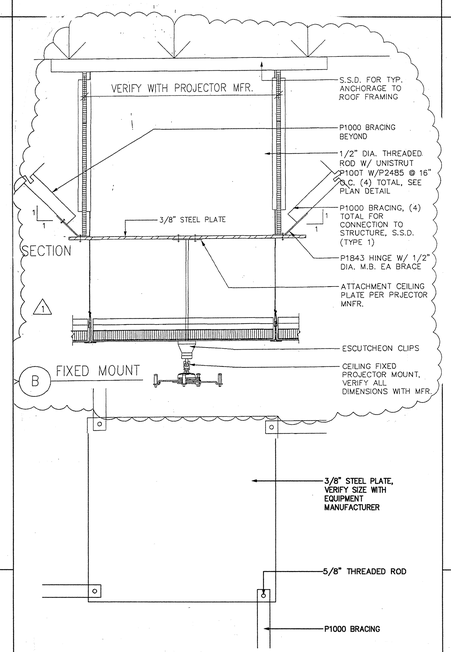

12 DETAIL AT RECESSED PROJECTOR ANCHORAGE
SCALE 1-1/2" =1'-0" CODE
FILE A10.07 CEILING DETAILS SPEC
12/9/05

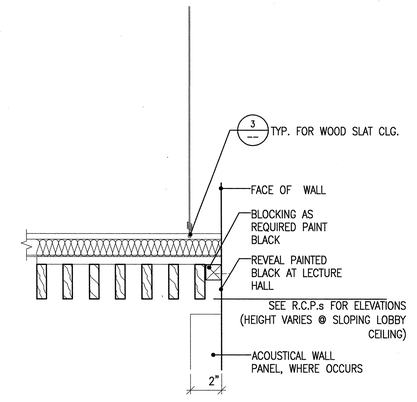

8 LINEAR WOOD CEILING AT WALL
SCALE 3"=1'-0" CODE
FILE A10.07 CEILING DETAILS SPEC
12/9/05

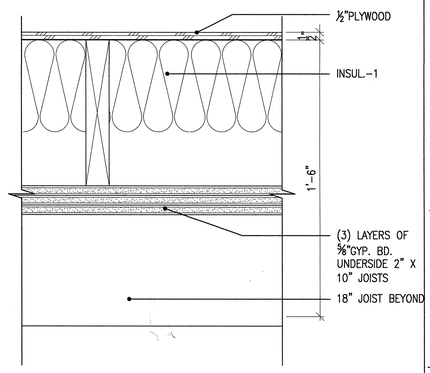

5 DETAIL AT SOUND ATTENUATION CEILING
SCALE 3"=1'-0" CODE
FILE A10.07 CEILING DETAILS SPEC
12/9/05

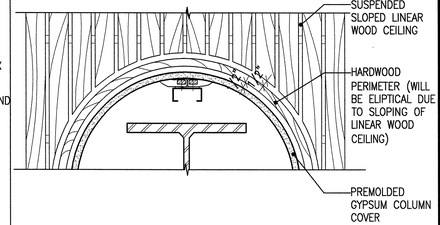

2 LINEAR WOOD CEILING AT COLUMN COVER
SCALE 1 1/2" = 1'-0" CODE
FILE A10.07 CEILING DETAILS SPEC
12/9/05

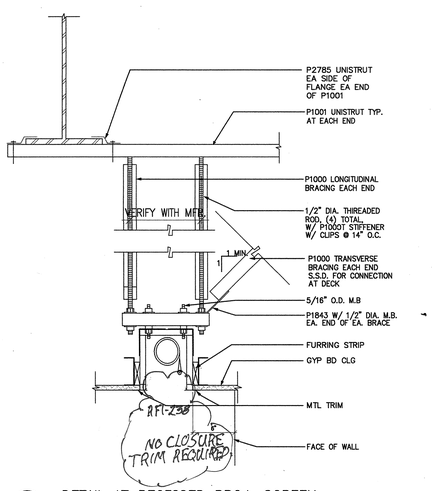

15 DETAIL AT RECESSED PROJ. SCREEN
SCALE 1 1/2"=1-0" CODE
FILE A10.07 CEILING DETAILS SPEC
12/9/05

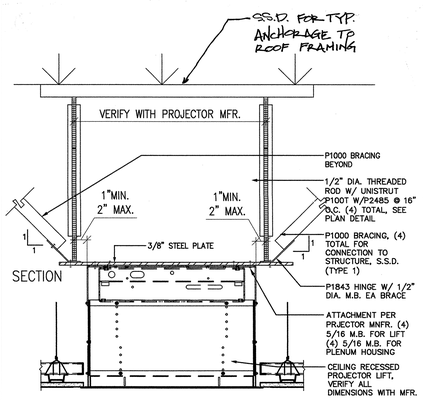

12 DETAIL AT RECESSED PROJECTOR ANCHORAGE
SCALE 1-1/2" =1'-0" CODE
FILE A10.07 CEILING DETAILS SPEC
12/9/05

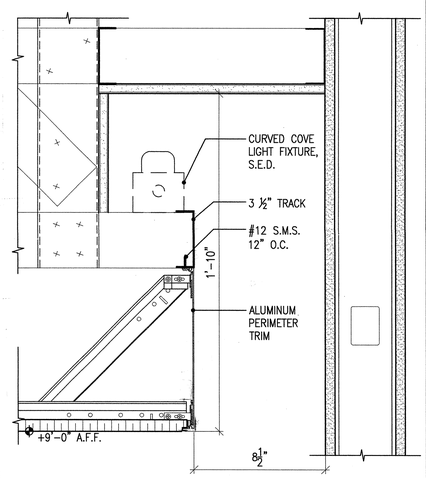

9 LIGHT COVE IN HALLWAY
SCALE 3"=1'-0" CODE
FILE A10.07 CEILING DETAILS SPEC
12/9/05

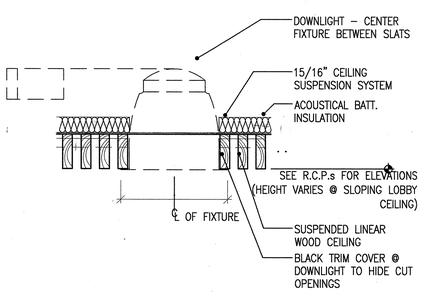

6 DOWNLIGHT AT WOOD CEILING
SCALE 3"=1'-0" CODE
FILE A10.07 CEILING DETAILS SPEC
12/9/05

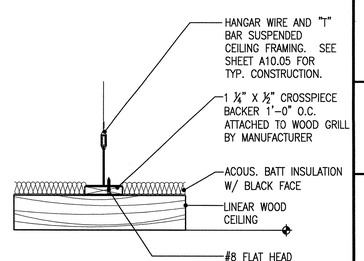

3 LINEAR WOOD CEILING
SCALE 6" = 1'-0" CODE
FILE A10.07 CEILING DETAILS SPEC
12/9/05

APPROVAL STAMP
IDENTIFICATION STAMP
DIVISION OF THE STATE ARCHITECT
APPLICATION NO. 107417
AC FLS TH SS
DATE: 12/21/05

NO.	ISSUED FOR	DATE
1	DSA APPROVAL SET	12/08/05

LICENSED ARCHITECT ROY S. LAPAS NO. C7256 REN. 7-31-07 STATE OF CALIFORNIA
CERTIFIED BY

K M D
KAPLAN McLAUGHLIN DIAZ
ARCHITECTURE PLANNING
222 VALLEJO SAN FRANCISCO, CA 94111
(415) 398-5191 FAX (415) 394-7158

SOLANO COMMUNITY COLLEGE

SCCD
VALLEJO CENTER
Contract # A003.6123.01.V1

PROJECT NO. 419-201
DATE 12-08-05

CEILING DETAILS
AS BUILTS

A10.07

PLOT DATE:

COPYRIGHT © 2004 BY KMD (KAPLAN McLAUGHLIN DIAZ). ALL RIGHTS RESERVED.

FIRST FLOOR OPENING SCHEDULE
SCALE NTS

PROJECT OPENING SCHEDULE

		DOOR INFO.							FRAME					DETAIL				
ROOM NAME	OPENING NUMBER	WIDTH (DOOR)	HEIGHT (DOOR)	TYPE (ELEVATION)	MAT./CONST.	FINISH	GLAZING	RATING	TYPE	MAT./CONST.	FINISH	GLAZING	RATING	HEAD	JAMB	SILL	HARDWARE SET	KEY NOTES
	A100-A	14'-0"	8'-0"	L	AL	AF	GL-3	--	2	AL	AF	GL-3	--	--	--	--	1	13
	A100-B	6'-0"	8'-0"	BB	AL	AF	GL-3	--	2	AL	AF	GL-3	--	--	--	--	2	--
	A100-C	6'-0"	8'-0"	BB	AL	AF	GL-3	--	2	AL	AF	GL-3	--	--	--	--	2	--
	A100-D	7'-0"	7'-0"	AA	WD	PT	--	20	IDA	HM	PT	--	20	--	--	--	27	16
	A100-E	6'-0"	7'-0"	AA	WD	PT	--	20	IDA	HM	PT	--	20	--	--	--	27	16
	A102-A	3'-0"	7'-0"	A	WD	TR	--	--	1	HM	PT	--	--	--	--	--	3	--
	A102-B	13'-11"	5'-6"	N	OCG	FF	--	--	--	--	FF	--	--	--	--	--	1	15
	A103-A	3'-0"	7'-0"	A	WD	TR	--	--	1	HM	PT	--	--	--	--	--	4	--
	A104-A	3'-0"	7'-0"	C	WD	TR	GL-6	--	1	HM	PT	--	--	--	--	--	5	--
	A104-B	3'-0"	7'-0"	A	WD	TR	--	20	4	HM	PT	GL-4	20	--	--	--	6	--
	A105-A	3'-0"	7'-0"	A	WD	TR	--	--	1	HM	PT	--	--	--	--	--	4	--
	A107-A	3'-0"	7'-0"	A	SRD	PT	--	--	1	SRD	PT	--	--	--	--	--	30	1
	A108-A	3'-0"	7'-0"	C	WD	TR	GL-6	--	1	HM	PT	--	--	--	--	--	6	--
	A109-A	3'-0"	7'-0"	A	HM	PT	--	--	1	HM	PT	--	--	--	--	--	9	--
	A110-A	3'-0"	8'-0"	B	AL	AF	GL-3	--	2	AL	AF	--	--	--	--	--	10	--
	A111-A	4'-0"	8'-0"	A	HM	PT	--	--	1	HM	PT	--	--	--	--	--	7	--
	A112-A	3'-0"	7'-0"	C	WD	TR	GL-3	--	1	HM	PT	--	--	--	--	--	6	--
	A113-A	4'-0"	8'-0"	A	HM	PT	--	60	1	HM	PT	--	60	--	--	--	7	--
	A114-A	3'-0"	7'-0"	C	WD	TR	GL-3	--	1	HM	PT	--	--	--	--	--	6	--
	A117-A	3'-0"	7'-0"	A	HM	PT	--	--	1	HM	PT	--	--	--	--	--	9	--
	A119-A	3'-0"	7'-0"	A	HM	PT	--	--	1	HM	PT	--	--	--	--	--	9	--
--	A120-A	1'-6"	1'-6"	--	--	--	--	--	9	AL	AA	GL-6	--	--	--	--	--	--
--	A120-B	1'-6"	1'-6"	--	--	--	--	--	9	AL	AA	GL-6	--	--	--	--	--	--
--	A120-C	1'-6"	1'-6"	--	--	--	--	--	9	AL	AA	GL-6	--	--	--	--	--	--
--	A120-D	1'-6"	1'-6"	--	--	--	--	--	9	AL	AA	GL-6	--	--	--	--	--	--
--	A120-E	1'-6"	1'-6"	--	--	--	--	--	9	AL	AA	GL-6	--	--	--	--	--	--
--	A120-F	1'-6"	1'-6"	--	--	--	--	--	9	AL	AA	GL-6	--	--	--	--	--	--
--	A120-G	1'-6"	1'-6"	--	--	--	--	--	9	AL	AA	GL-6	--	--	--	--	--	--
--	A120-H	1'-6"	1'-6"	--	--	--	--	--	9	AL	AA	GL-6	--	--	--	--	--	--
	A121-A	3'-0"	7'-0"	A	WD	TR	--	--	1	HM	PT	--	--	--	--	--	11	--
	A121-B	3'-0"	8'-10"	E	AL	AF	GL-3	--	2	AL	AF	--	--	--	--	--	12	11
	A122-A	3'-0"	7'-0"	A	WD	TR	--	--	1	HM	PT	--	--	--	--	--	11	--
	A123-A	3'-0"	7'-0"	A	WD	TR	--	--	1	HM	PT	--	--	--	--	--	11	--
	A123-B	3'-0"	8'-10"	E	AL	AF	GL-3	--	2	AL	AF	--	--	--	--	--	12	11
	A124-A	3'-0"	7'-0"	A	WD	TR	--	--	3	HM	PT	GL-4	--	--	--	--	11	~~11~~ RFI-240A
	A124-B	3'-0"	7'-0"	A	WD	TR	--	--	3	HM	PT	GL-4	--	--	--	--	11	~~11~~
	A124-C	3'-0"	7'-0"	A	WD	TR	--	--	4	HM	PT	GL-4	--	--	--	--	13	--
	A124-D	3'-0"	7'-0"	A	WD	TR	--	--	5	HM	PT	GL-4	--	--	--	--	13	--
	A124-E	3'-0"	7'-0"	A	WD	TR	--	--	6	HM	PT	GL-4	--	--	--	--	13	--
	A124-F	3'-0"	8'-0"	A	HM	PT	--	--	1	HM	PT	--	--	--	--	--	14	11
--	A124-G	6'-0"	4'-0"	--	--	--	--	--	8	HM	PT	GL-4	--	--	--	--	--	--
	A125-A	3'-0"	7'-0"	A	WD	TR	--	--	1	HM	PT	--	--	--	--	--	15	12
	A125-B	3'-0"	8'-10"	E	AL	AF	GL-3	--	2	AL	AF	--	--	--	--	--	12	11
--	A125-C	8'-0"	4'-0"	--	--	--	--	--	7	HM	PT	GL-4	--	--	--	--	--	--
	A127-A	3'-0"	7'-0"	A	WD	TR	--	--	1	HM	PT	--	--	--	--	--	15	12
	A127-B	3'-0"	7'-0"	C	WD	TR	GL-4	--	1	HM	PT	--	--	--	--	--	15	12 RFI-298
	A129-A	3'-0"	7'-0"	A	WD	TR	--	--	1	HM	PT	--	--	--	--	--	15	12
	A129-B	3'-0"	8'-10"	E	AL	AF	GL-3	--	2	AL	AF	--	--	--	--	--	12	11
--	A129-C	8'-0"	4'-0"	--	--	--	--	--	7	HM	PT	GL-4	--	--	--	--	--	--
	A130-A	3'-0"	7'-0"	A	WD	TR	--	20	1	HM	PT	--	20	--	--	--	16	--
	A130-B	3'-0"	8'-0"	B	AL	AF	GL-3	--	2	AL	AF	--	--	--	--	--	10	--
	A130-C	3'-0"	8'-10"	A	HM	PT	--	--	1	HM	PT	--	--	--	--	--	17	-- SEE 2/A5.21 RFI-061
	B100-A	6'-0"	8'-0"	BB	AL	AF	GL-3	--	2	AL	AF	--	--	--	--	--	18	7
	B100-B	3'-0"	7'-0"	A	WD	TR	--	--	1	HM	PT	--	--	--	--	--	9	--
	B101-A	6'-0"	7'-0"	AA	SRD	TR	--	--	1	HM	PT	--	--	--	--	--	19	1
	B101-B	3'-0"	7'-0"	A	WD	TR	--	--	1	HM	PT	--	--	--	--	--	9	--
	B101-C	3'-0"	8'-0"	A	HM	PT	--	--	1	HM	PT	--	--	--	--	--	20	--
	B101-D	12'-0"	9'-6"	G	USD	FF	GL-9	--	--	--	--	--	--	--	--	--	1	14
	B102-A	5'-0"	7'-0"	AA	WD	TR	--	--	1	HM	PT	--	--	--	--	--	29	--
	B103-A	6'-0"	7'-0"	CC	WD	TR	GL-4	--	1	HM	PT	--	--	--	--	--	21	--
	B103-B	4'-0"	7'-0"	A	WD	TR	--	--	1	HM	PT	--	--	--	--	--	9	17
	B103-C	6'-0"	8'-0"	CC	HM	PT	GL-3	--	1	HM	PT	--	--	--	--	--	22	--
	B104-A	3'-0"	7'-0"	A	WD	TR	--	--	1	HM	PT	--	--	--	--	--	9	--
	B105-A	3'-0"	8'-0"	A	HM	PT	--	--	1	HM	PT	--	--	--	--	--	7	--
	B106-A	6'-0"	7'-0"	AA	WD	TR	--	--	1	HM	PT	--	--	--	--	--	21	--
	B106-B	3'-0"	7'-0"	A	WD	TR	--	--	1	HM	PT	--	--	--	--	--	6	--
--	B106-C	4'-0"	4'-8"	--	--	--	--	--	10	HM	PT	GL-4	--	--	--	--	--	--
	B106-D	6'-0"	8'-0"	AA	HM	PT	--	--	1	HM	PT	--	--	--	--	--	22	--
	B108-A	3'-0"	7'-0"	A	WD	TR	--	--	1	HM	PT	--	--	--	--	--	9	--
	B112-A	3'-0"	7'-0"	A	WD	TR	--	--	1	HM	PT	--	--	--	--	--	23	17&21 RFI-061
	B114-A	3'-0"	7'-0"	A	WD	TR	--	--	1	HM	PT	--	--	--	--	--	23	17&21 RFI-061
	B114-B	2'-0"	7'-0"	A	WD	TR	--	--	1	HM	PT	--	--	--	--	--		--

SECOND FLOOR OPENING SCHEDULE
SCALE NTS

PROJECT OPENING SCHEDULE

		DOOR INFO.							FRAME					DETAIL				
ROOM NAME	OPENING NUMBER	WIDTH (DOOR)	HEIGHT (DOOR)	TYPE (ELEVATION)	MAT./CONST.	FINISH	GLAZING	RATING	TYPE	MAT./CONST.	FINISH	GLAZING	RATING	HEAD	JAMB	SILL	HARDWARE SET	KEY NOTES
	A202-A	3'-0"	7'-0"	A	WD	TR	--	--	1	HM	PT	--	--	--	--	--	3	--
	A203-A	3'-0"	7'-0"	A	WD	TR	--	--	1	HM	PT	--	--	--	--	--	23	--
	A204-A	4'-0"	7'-0"	A	WD	TR	--	--	1	HM	PT	--	--	--	--	--	3	--
	A204-B	5'-4"	7'-0"	AA	HM	PT	--	--	1	HM	PT	--	--	--	--	--	24	--
	A204-C	2'-6"	7'-0"	A	HM	PT	--	--	1	HM	PT	--	--	--	--	--	9	--
	A205-A	3'-0"	7'-0"	A	WD	TR	--	--	1	HM	PT	--	--	--	--	--	23	--
	A206-A	3'-0"	7'-0"	A	HM	PT	--	20	1	HM	PT	--	20	--	--	--	8	19 RFI-061A
	A207-A	3'-6"	7'-0"	C	WD	TR	GL-7	60	1	HM	PT	--	60	--	--	--	3	--
	A207-B	3'-0"	7'-0"	A	WD	TR	--	60	1	HM	PT	--	60	--	--	--	3	--
	A209-A	3'-6"	7'-0"	C	WD	TR	GL-7	60	1	HM	PT	--	60	--	--	--	3	--
	A209-B	3'-6"	7'-0"	A	WD	TR	--	60	1	HM	PT	--	60	--	--	--	26	10
	A209-C	3'-6"	7'-0"	A	WD	TR	--	60	1	HM	PT	--	60	--	--	--	26	10
	A210-A	7'-0"	7'-0"	AA	WD	PT	--	20	IDA	HM	PT	--	20	--	--	--	27	16&10
	A210-B	3'-0"	7'-0"	C	WD	TR	GL-10	20	1	HM	PT	--	20	--	--	--	3	--
	A210-C	3'-0"	7'-0"	A	WD	TR	--	20	1	HM	PT	--	20	--	--	--	3	--
	A210-D	3'-0"	7'-0"	A	WD	TR	--	20	1	HM	PT	--	20	--	--	--	16	10
	A211-A	3'-6"	7'-0"	C	WD	TR	GL-7	60	1	HM	PT	--	60	--	--	--	3	--
	A211-B	3'-0"	7'-0"	A	WD	TR	--	60	1	HM	PT	--	60	--	--	--	3	--
	A212-A	3'-0"	7'-0"	C	WD	TR	GL-6	--	1	HM	PT	--	--	--	--	--	6	--
	A213-A	3'-0"	7'-0"	C	WD	TR	GL-10	20	1	HM	PT	--	20	--	--	--	3	--
	A214-A	3'-0"	7'-0"	A	HM	PT	--	20	1	HM	PT	--	20	--	--	--	8	19 RFI-061A
	A215-A	3'-0"	7'-0"	C	WD	TR	GL-10	20	1	HM	PT	--	20	--	--	--	3	--
	A216-A	3'-0"	7'-0"	C	WD	TR	GL-6	--	1	HM	PT	--	--	--	--	--	6	--
	A217-A	3'-0"	7'-0"	C	WD	TR	GL-10	20	1	HM	PT	--	20	--	--	--	3	--
	A218-A	3'-0"	7'-0"	C	WD	TR	GL-6	--	1	HM	PT	--	--	--	--	--	6	--
	A220-A	3'-0"	7'-0"	C	WD	TR	GL-6	--	1	HM	PT	--	--	--	--	--	6	--
	A222-A	3'-0"	7'-0"	C	WD	TR	GL-6	--	1	HM	PT	--	--	--	--	--	6	--
	A224-A	3'-0"	7'-0"	C	WD	TR	GL-6	--	1	HM	PT	--	--	--	--	--	6	--
	A226-A	3'-0"	7'-0"	C	WD	TR	GL-6	--	1	HM	PT	--	--	--	--	--	6	--
	A228-A	3'-0"	7'-0"	A	WD	TR	--	--	1	HM	PT	--	--	--	--	--	25	22
	A230-A	3'-0"	7'-0"	C	WD	TR	GL-6	--	1	HM	PT	--	--	--	--	--	6	--
	A234-A	3'-0"	7'-0"	C	WD	TR	GL-6	--	1	HM	PT	--	--	--	--	--	6	--
	A240-A	3'-0"	7'-0"	A	HM	PT	--	20	1	HM	PT	--	20	--	--	--	8	--
	A242-A	3'-0"	7'-0"	C	WD	TR	GL-10	20	1	HM	PT	--	20	--	--	--	3	--

ROOF OPENING SCHEDULE
SCALE NTS

	A301-A	3'-0"	6'-0"	A	HM	PT	--	--	1	HM	PT	--	--	--	--	--	7	--

RFI-308 PAINT CP-3 DENIM

6 FIRE RATING SCHEDULE
SCALE NONE

A. Fire Ratings:
1. 20 — 20 Minute
2. 45 — 45 Minute
3. 60 — 60 Minute
4. 90 — 90 Minute
5. 180 — 180 Minute

7 MATERIAL/CONSTRUCTION LEGEND
SCALE NONE

A. Door Material / Construction:
1. AL — Aluminum / Glass
2. TGL — Tempered Glass Door
3. DHM — Detention Hollow Metal
4. HM — Hollow Metal
5. HC — Wood, Hollow Core
6. WD — Wood, Solid Core
7. PFWD — Plastic Faced Wood Door
8. IDA — Integrated Door Assembly
9. BRZ — Bronze/Glass
10. RD — Revolving Door
11. OCCD — Overhead Coiling Counter Door
12. OCD — Overhead Coiling Door
13. OCG — Overhead Coiling Grille
14. OSD — Overhead Sectional Door
15. AFD — Accordian Type Fire Door
16. SGD — Sliding Glass Door
17. SRD — Sound Retardent Door Assembly
18. USD — Upward Acting Sectional Door

B. Frame Material / Construction:
1. AL — Aluminum
2. DHM — Detention Hollow Metal
3. HM — Hollow Metal
4. PM — Prefinished Metal, Knock Down Type
5. WD — Wood
6. DWD — Detention Wood Door
7. BRZ — Bronze

8 FINISH LEGEND
SCALE NONE

A. Door Finish:
1. FF — Factory Finish
2. PT — Paint
3. SS — Stainless Steel
4. TR — Transparent Finish
5. STR — Semi Transparent Finish
6. AA — Anodized Aluminum
7. AF — Aluminum Finish per Section 08420

B. Frame Finish:
1. FF — Factory Finish
2. PT — Paint
3. SS — Stainless Steel
4. TR — Transparent Finish
5. STR — Semi Trasparent Finish
6. AA — Anodized Aluminum
7. AF — Aluminum Finish per Section 08420

9 GLAZING LEGEND
SCALE NONE

A. Glazing Type (See Section 08800):
1. GL-3 — Insulated Tempered Glass
2. GL-4 — Tempered Glass, Clear
3. GL-6 — Tempered Sandblasted Glass with Sealer (Room Side)
4. GL-7 — 60 Min. Fire Rated Glass, Sandblasted with Sealer (Room Side)
5. GL-9 — Top (2) Sections Clear to match Section 08800, GL-1, Intermediate (2) Sections Sandblasted Glass with Sealer (Room Side)
6. GL-10 — 20 Min. Fire Rated Glass, Sandblasted with Sealer (Room Side)

1 SCHEDULE GENERAL NOTES
SCALE NONE

A. The Schedule defines the elements of each door and interior window opening in the Project.

B. Materials, finishes, and installation of products referenced in the Schedule shall be in accordance with requirements specified in the respective product Sections.

C. Head, Jamb, and Sill details for door and interior window openings are shown on Drawing Sheet numbers as indicated in Schedule.

D. Refer to Partition Types as indicated on Drawings to determine frame depth.

E. Hardware Sets referenced are in Section 08710.

F. Existing Materials: Existing materials are indicated by (E) in the opening schedule.

G. Glass Types referenced in schedule are specified in Section 08800.

H. All glazing in and adjacent to doors is to comply with safety glass requirements per CBC 2001.

I. Electrified Hardware: Coordinate all electrical requirements with Division 16.

J. If the opening contains a door and no sidelight, the rating of the frame shall match the rating of the door. If the opening contains a door and a sidelight, or if the opening contains a window, the rating of the frame shall match the rating of the glazing.

k RFI-065 DIFFERENT TYPE OF DOOR LOUVERS ARE OK.

2 SCHEDULE KEY NOTES LEGEND
SCALE NONE

A.Key Notes:
1. Fill frame with insulation for Sound Control. See Sound Control Door and Frame Assemblies, Section 08343.
2. Cased Opening.
3. Galvanized Door and Frame.
4. Double Egress Door
5. Electrical and/or Security coordination required for this opening.
6. Card Reader.
7. Automatic Operator.
8. Electrical Lock, Electronic Strike.
9. Keyswitch.
10. Hold Open.
11. Door Alarm.
12. Key Pad.
13. See Automatic Entrance Doors and Frames, Section 08461.
14. See Upward Acting Sectional Door, Section 08361.
15. See Overhead Coiling Counter Grilles, Section 08332.
16. See Preassembled Door and Frame Units, Section 08255.
17. Install door grills per mechanical drawings. See sheet M2.12.
18. 18X18 DOOR LOUVER RFI-061
19. UNDER CUT DOOR 3/4" MAX TO KEEP FIRE RATING PER U.L. REQUIREMENTS RFI-061A
20. 8X8 DOOR LOUVER PER DWG. M2.12 KEY NOTE 7
21. 24X16 DOOR LOUVER PER DWG. M2.12 KEY NOTE 8
22. UNDER CUT DOOR 1" PER DWG. M2.21 KEY NOTE 18

15 DOOR TYPES
SCALE NTS

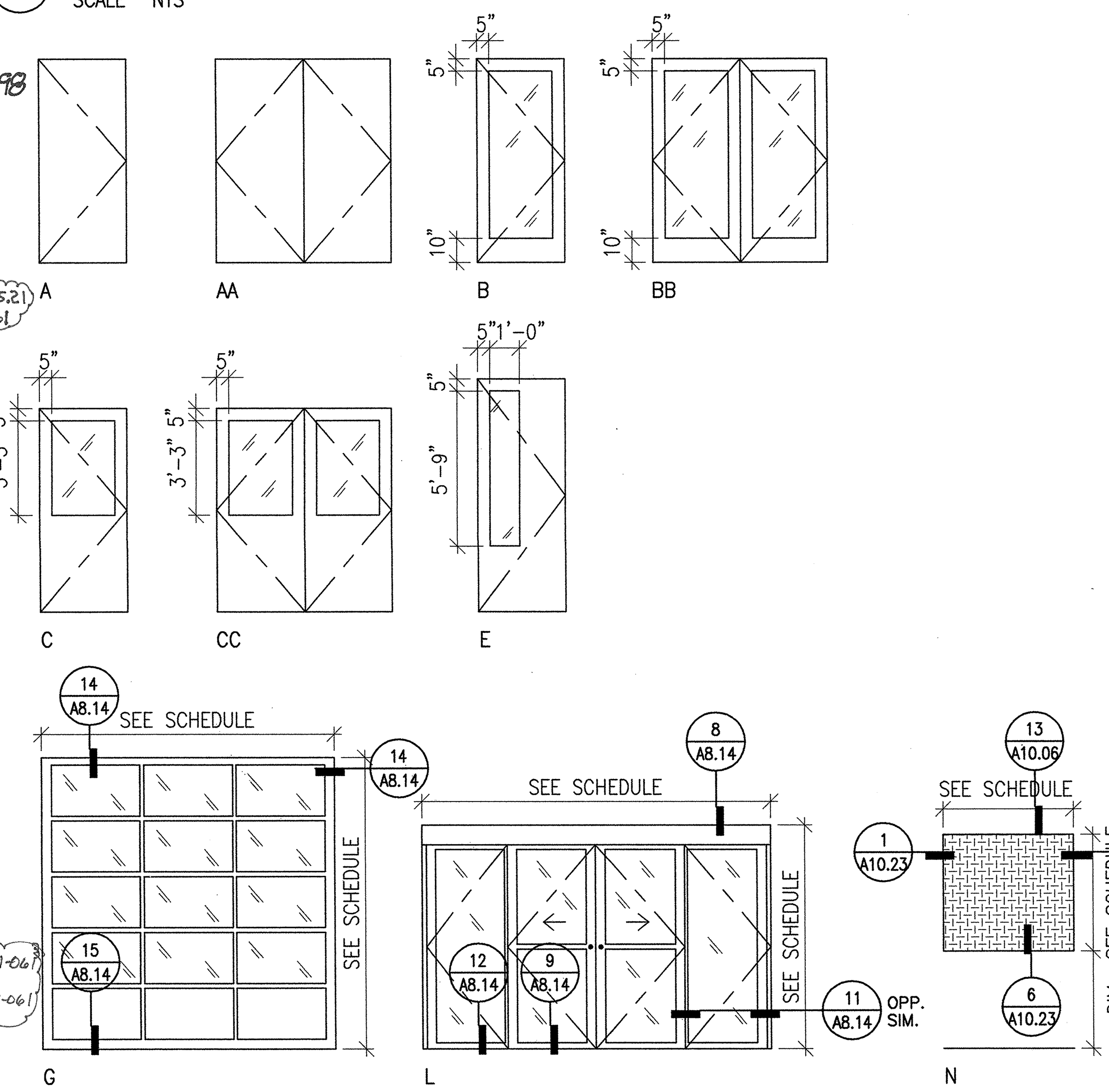

10 FRAME TYPES
SCALE NTS

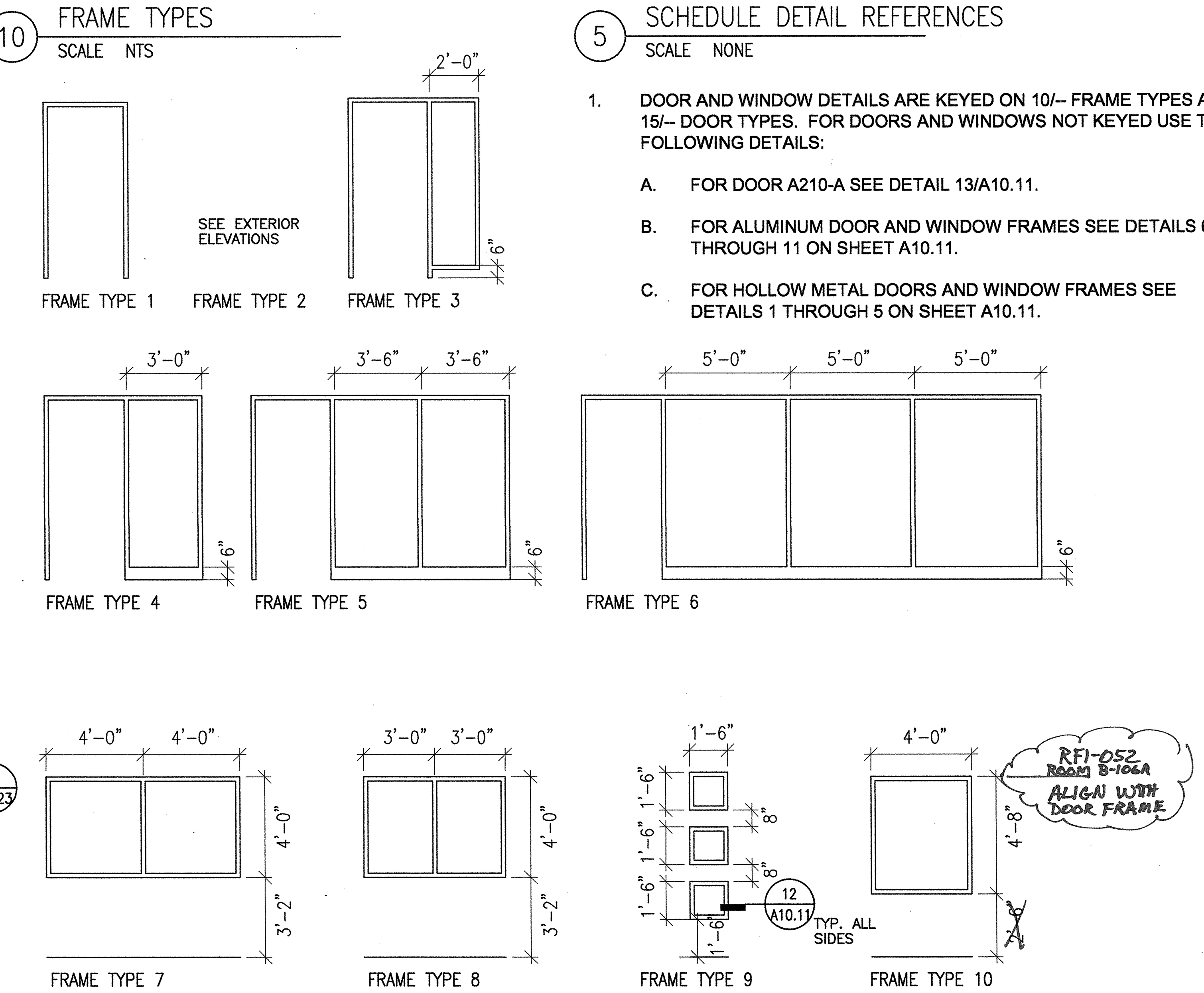

5 SCHEDULE DETAIL REFERENCES
SCALE NONE

1. DOOR AND WINDOW DETAILS ARE KEYED ON 10/-- FRAME TYPES AND 15/-- DOOR TYPES. FOR DOORS AND WINDOWS NOT KEYED USE THE FOLLOWING DETAILS:
   A. FOR DOOR A210-A SEE DETAIL 13/A10.11.
   B. FOR ALUMINUM DOOR AND WINDOW FRAMES SEE DETAILS 6 THROUGH 11 ON SHEET A10.11.
   C. FOR HOLLOW METAL DOORS AND WINDOW FRAMES SEE DETAILS 1 THROUGH 5 ON SHEET A10.11.

Ralph Larsen & Son, Inc. General Contractors License No. 185341 300 6th Avenue San Mateo, CA 94401-4221 Phone (650) 579-0339 Fax (650) 579-0349

Request for Information 309

Detailed, RFIs Grouped by RFI Number

Vallejo Center for Solano Community College Dist, Northgate Business Park, 545 Columbus Parkway, Vallejo, CA 94591 — Project # 2604 Tel: (707) 649-8327 Fax: (707) 553-9728 — Ralph Larsen & Son, Inc.

RFI #: 309 — Date Created: 6/26/2007
Answer Company — Answered By — Author Company: Ralph Larsen & Son, Inc., 300 6th Avenue, San Mateo, CA 94401 — Authored By: Jay Tucker
Co-Respondent — Author RFI Number
Subject: Confirm color for roof Piping — Discipline — Category
Cc: Company Name — Contact Name — Copies — Notes

Question — Date Required: 7/8/2007
The fluid cooler piping on the roof is required to be painted. In discussions with Mr. d'Arcy Howard, I understood that we are to paint the roof piping a color that matches the color of the rock ballast on the roof except the pipes that are vertical and connect to the end of the Cooling Tower. The vertical pipes are to be the same color as the Cooling Tower. We are proceeding with painting these items per our understanding.
1. Is our understanding correct?

Suggestion

Answer — Date Answered:
1) The Architect has selected a new color to be identified as PT-14 EQUIPMENT GRAY, which is a paint color selected to be color-matched as close as possible by the vendor's paint supplier to a piece of existing rooftop equipment, to be used painting all rooftop items per specification section 09900.

The Architect performed a field visit with the contractor's superintendent to tape-tag all items included and excluded items to be painted.

The contractor shall submitted samples of the paint as required by the specification section for review and approval.

d'Arcy Howard-KMD

APPROVAL STAMP

IDENTIFICATION STAMP
DIVISION OF THE STATE ARCHITECT
APPL 02- 107417
AC [signature] FLS TH SS RL
DATE: 12/21/05

NO.	ISSUED FOR	DATE
1	DSA APPROVAL SET	12/08/05

LICENSED ARCHITECT ROY S. LATKA NO. C7256 REN. 7-31-05 STATE OF CALIFORNIA
CERTIFIED BY

KMD
KAPLAN McLAUGHLIN DIAZ
ARCHITECTURE PLANNING
222 VALLEJO SAN FRANCISCO, CA 94111
(415) 398-5191 FAX (415) 394-7158

SOLANO COMMUNITY COLLEGE

SCCD
VALLEJO CENTER
Contract # A003.6123.01.V1

PROJECT NO. 419-201 — DATE 12-08-05

OPENING SCHEDULE
AS BUILTS

A10.10

COPYRIGHT © 2004 BY KMD (KAPLAN McLAUGHLIN DIAZ). ALL RIGHTS RESERVED.

PATH: G:\000\000-000\ACAD\SHEETS\

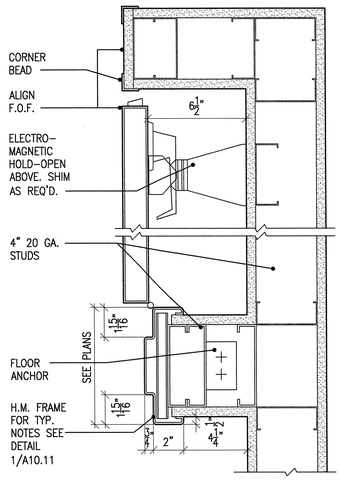

13 HOLD-OPEN DOOR POCKET
SCALE 3"=1'-0" CODE
FILE 08110-18-GS SPEC

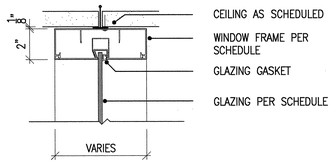

A HEAD AT CEILING

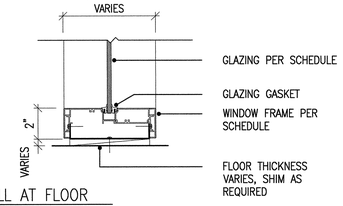

B SILL AT FLOOR

10 ALUMINUM DOOR/ WINDOW FRAMES
SCALE 3"=1'-0" CODE
FILE 08505-05-GS SPEC

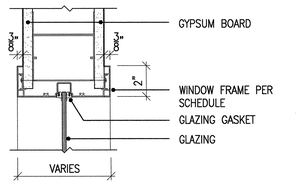

A HEAD/JAMB

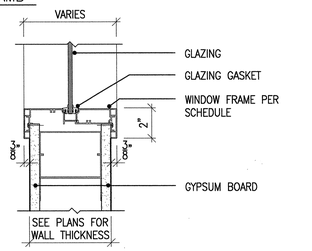

B SILL

7 ALUMINUM WINDOW FRAMES
SCALE 3"=1'-0" CODE
FILE 08505-02-GS SPEC

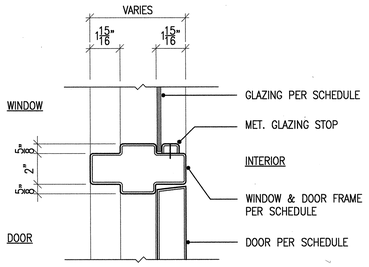

4 HOLLOW METAL WINDOW/DOOR FRAME
SCALE 3"=1'-0" CODE
FILE 08850-05-GS SPEC

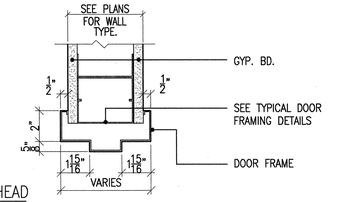

A HEAD

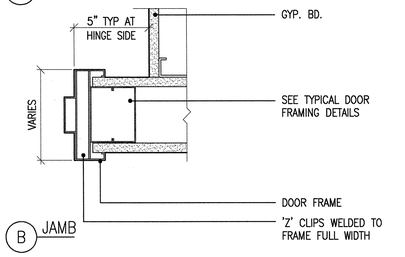

B JAMB

1 DOOR DETAILS > 4'-0" TO 8'-0" WIDE
SCALE 3"=1'-0" CODE 2001 CBC
FILE 08110-02-MS SPEC ALL "Ca" RANGES

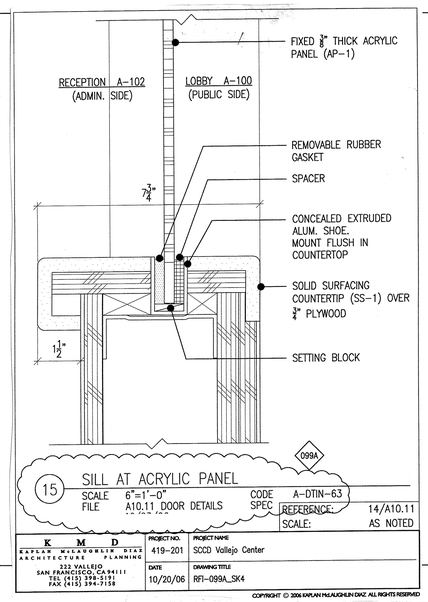

15 SILL AT ACRYLIC PANEL
SCALE 6"=1'-0" CODE A-DTIN-63
FILE A10.11 DOOR DETAILS SPEC
REFERENCE: 14/A10.11
SCALE: AS NOTED

K M D KAPLAN McLAUGHLIN DIAZ ARCHITECTURE PLANNING	PROJECT NO. 419-201	PROJECT NAME SCCD Vallejo Center
222 VALLEJO SAN FRANCISCO, CA 94111 TEL (415) 398-5191 FAX (415) 394-7158	DATE 10/20/06	DRAWING TITLE RFI-099A_SK4

COPYRIGHT © 2006 KAPLAN McLAUGHLIN DIAZ. ALL RIGHTS RESERVED

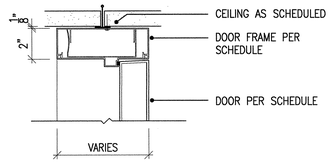

A HEAD AT CEILING

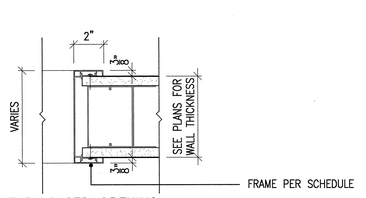

B TYP. CASED OPENING

11 ALUMINUM FRAMES
SCALE 3"=1'-0" CODE
FILE 08505-06-GS SPEC

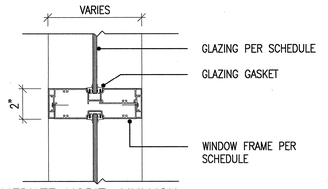

A INTERMEDIATE HORIZ. MULLION

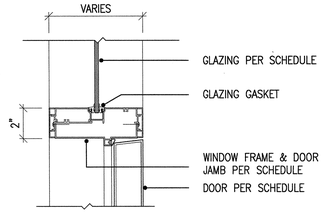

B HEAD @ TRANSOM

8 ALUMINUM DOOR/ WINDOW FRAMES
SCALE 3"=1'-0" CODE
FILE 08505-03-GS SPEC

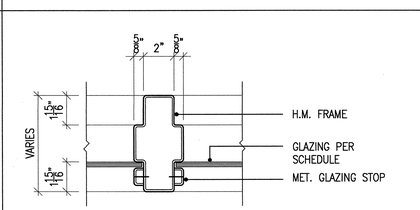

A INTERMEDIATE VERTICAL MULLION

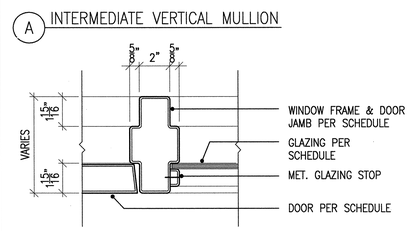

B DOOR/WINDOW JAMB

5 HOLLOW METAL DOOR/WINDOW FRAMES
SCALE 3"=1'-0" CODE
FILE 08850-06-GS SPEC

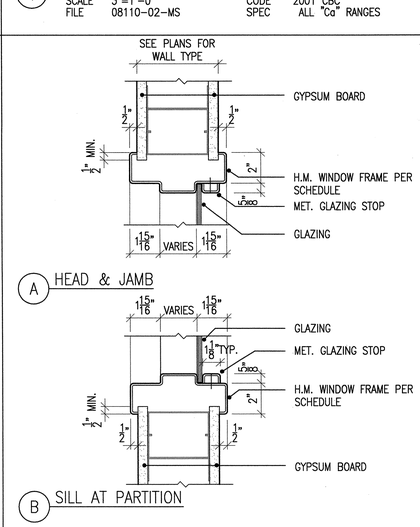

A HEAD

B JAMB

6 TYPICAL ALUMINUM DOOR FRAME
SCALE 3"=1'-0" CODE
FILE 08505-01-GS SPEC

A HEAD & JAMB

B SILL AT PARTITION

2 HOLLOW METAL WINDOW FRAMES
SCALE 3"=1'-0" CODE
FILE 08850-04-GS SPEC

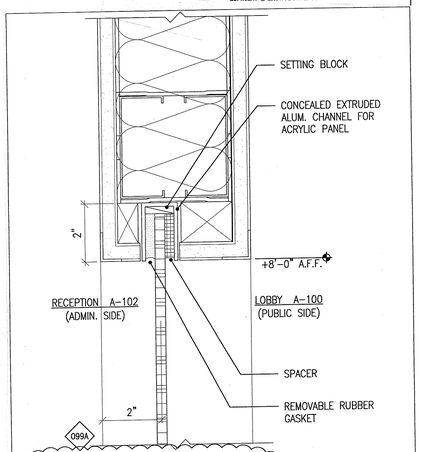

14 HEADER/JAMB AT ACRYLIC PANEL
SCALE 6"=1'-0" CODE A-DTIN-62
FILE A10.11 DOOR DETAILS SPEC
10/23/06
REFERENCE: 14/A10.11
SCALE: AS NOTED

K M D KAPLAN McLAUGHLIN DIAZ ARCHITECTURE PLANNING	PROJECT NO. 419-201	PROJECT NAME SCCD Vallejo Center
222 VALLEJO SAN FRANCISCO, CA 94111 TEL (415) 398-5191 FAX (415) 394-7158	DATE 10/20/06	DRAWING TITLE RFI-099A_SK3

COPYRIGHT © 2006 KAPLAN McLAUGHLIN DIAZ. ALL RIGHTS RESERVED

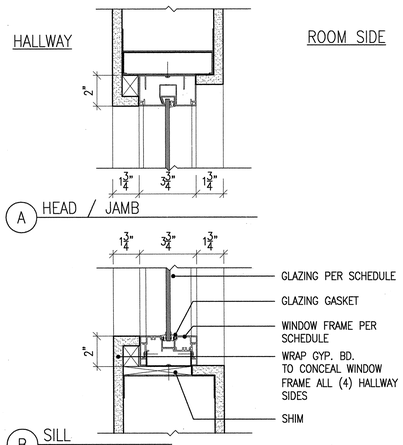

A HEAD / JAMB

B SILL

12 WINDOW FRAMING AT HALLWAY
SCALE 3"=1'-0" CODE
FILE A10.11 DOOR DETAILS 7/15/05 SPEC

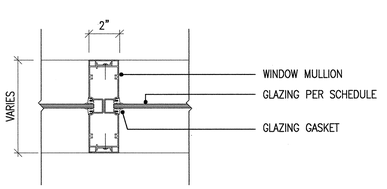

A INTERMEDIATE VERTICAL MULLION

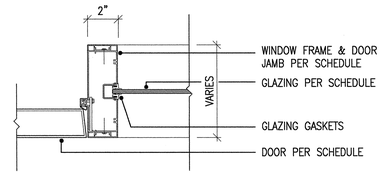

B DOOR/ WINDOW JAMB

9 ALUMINUM DOOR/WINDOW FRAMES
SCALE 3"=1'-0" CODE
FILE 08505-04-GS SPEC

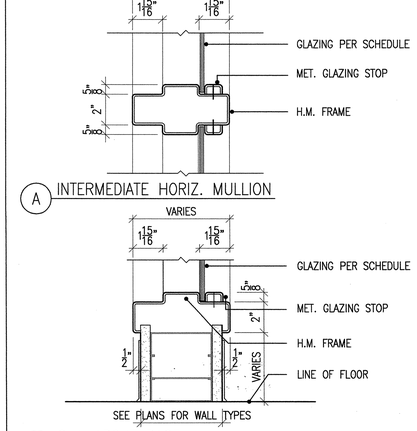

A HEAD

B JAMB

6 TYPICAL ALUMINUM DOOR FRAME
SCALE 3"=1'-0" CODE
FILE 08505-01-GS SPEC

A INTERMEDIATE HORIZ. MULLION

B SILL ABOVE BASE

3 HOLLOW METAL WINDOW FRAMES
SCALE 3"=1'-0" CODE
FILE 08850-03-GS SPEC

APPROVAL STAMP
IDENTIFICATION STAMP
DIVISION OF THE STATE ARCHITECT
APP'L NO.- 107417
AC FLS SS
DATE: 12/21/05

NO.	ISSUED FOR	DATE
1	DSA APPROVAL SET	12/08/05

LICENSED ARCHITECT ROY S. LAZAR NO. C7256 REN. 7-31-07 STATE OF CALIFORNIA
CERTIFIED

K M D
KAPLAN McLAUGHLIN DIAZ
ARCHITECTURE PLANNING
222 VALLEJO SAN FRANCISCO, CA 94111
(415) 398-5191 FAX (415) 394-7158

SOLANO COMMUNITY COLLEGE

SCCD
VALLEJO CENTER
Contract # A003.6123.01.V1

PROJECT NO.	DATE
419-201	12-08-05

INTERIOR DOOR AND WINDOW DETAILS
AS BUILTS

A10.11

PLOT DATE:

COPYRIGHT © 2004 BY KMD (KAPLAN McLAUGHLIN DIAZ). ALL RIGHTS RESERVED.

PATH: G:\000\000-000\ACAD\SHEETS\

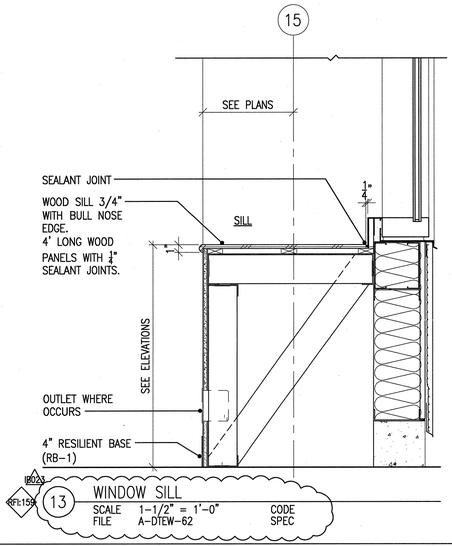

13 WINDOW SILL
SCALE 1-1/2" = 1'-0" CODE
FILE A-DTEW-62 SPEC

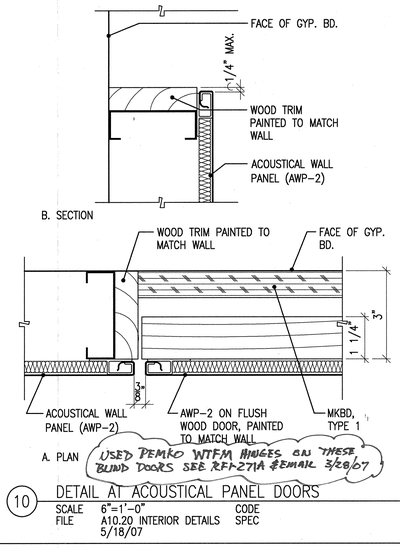

USED PEMKO WTFM HINGES ON THESE BLIND DOORS SEE RFI-271A REMAR 3/28/07

10 DETAIL AT ACOUSTICAL PANEL DOORS
SCALE 6"=1'-0" CODE
FILE A10.20 INTERIOR DETAILS SPEC
5/18/07

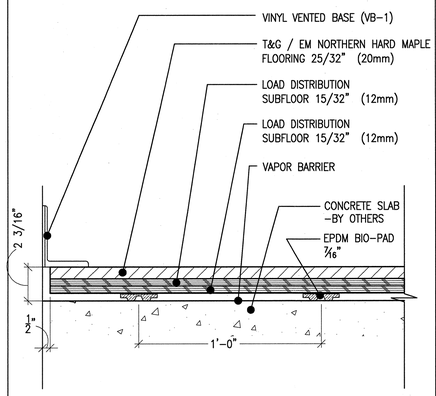

7 SPORTS FLOOR ASSEMBLY
SCALE 3"=1'-0" CODE
FILE A10.20 INTERIOR DETAILS SPEC
5/18/07

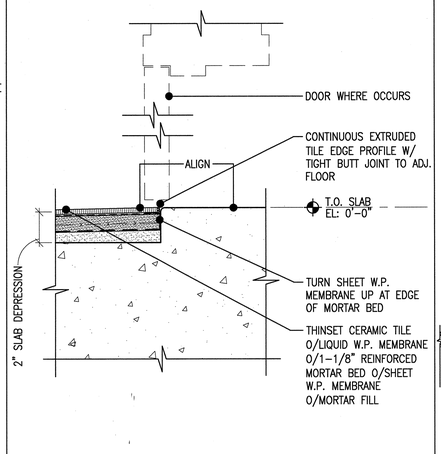

4 DEPRESSED TILE FLOOR TRANSITION
SCALE 3"=1'-0" CODE
FILE A10.20 INTERIOR DETAILS SPEC
5/18/07

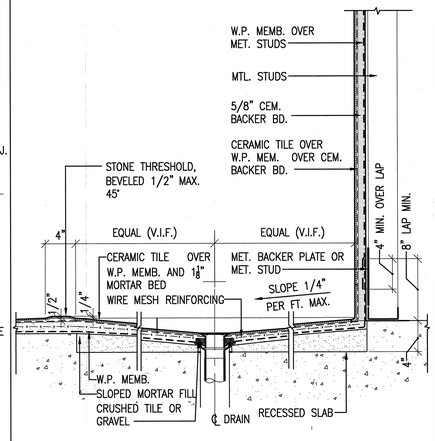

1 SECTION AT D.A. SHOWER FLOOR
SCALE 1 1/2"=1'-0" CODE 2001 CBC
FILE 10960-09-GS SPEC

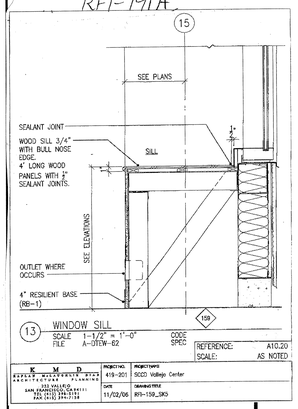

RFI-191A

REFERENCE: A10.20
SCALE: AS NOTED

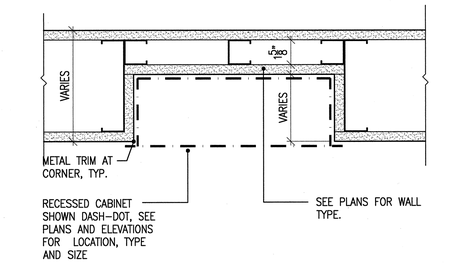

14 RECESSED CABINET AT RATED WALL
SCALE 3"=1'-0" CODE
FILE 09250-18-GS SPEC

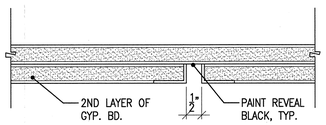

11 TYPICAL GYP. BD. REVEAL
SCALE 6"=1'-0" CODE
FILE A10.20 INTERIOR DETAILS SPEC
5/18/07

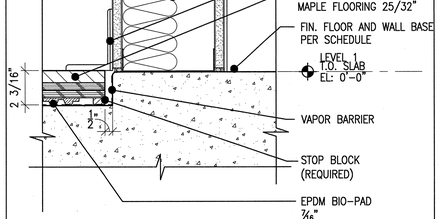

8 BASE OF WALL @ DEPRESSED SPORTS FLOOR
SCALE CODE
FILE A10.20 INTERIOR DETAILS SPEC
5/18/07

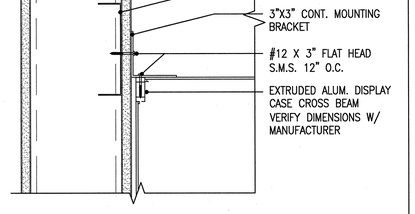

5 DISPLAY CASE ANCHORAGE @ TOP
SCALE 3" = 1'-0" CODE
FILE A-DTIN-51 SPEC
5/18/07

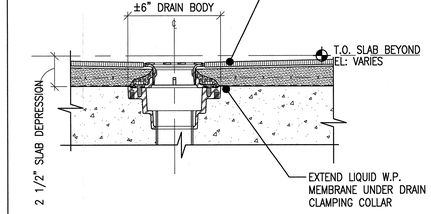

2 TYP. RESTROOM FLOOR DRAIN
SCALE 3" = 1'-0" CODE
FILE A10.20 INTERIOR DETAILS SPEC
5/18/07

2/05	INFORMATION BULLETIN #23	05/18/07
1	DSA APPROVAL SET	12/08/05
NO.	ISSUED FOR	DATE

LICENSED ARCHITECT ROY S. LATKA NO. C7256 REN. 7-31-07 STATE OF CALIFORNIA
CERTIFIED BY

K M D
KAPLAN McLAUGHLIN DIAZ
ARCHITECTURE PLANNING
222 VALLEJO SAN FRANCISCO, CA 94111
(415)398-5191 FAX (415)394-7158

APPROVAL STAMP
IDENTIFICATION STAMP
DIVISION OF THE STATE ARCHITECT
APPL 02- 107417
AC ____ FLS ____ SS ____
DATE: ____

SOLANO COMMUNITY COLLEGE

SCCD
VALLEJO CENTER
Contract # A003.6123.01.V1

PROJECT NO.	DATE
419-201	12-08-05

INTERIOR DETAILS

A10.20

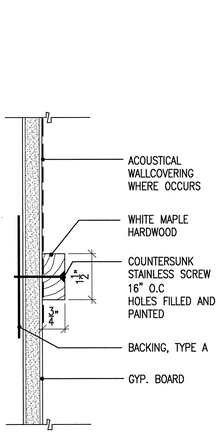

15 DETAIL AT WOOD CHAIR RAIL/TRIM
SCALE 6"=1'-0" CODE
FILE A10.20 INTERIOR DETAILS SPEC
5/18/07

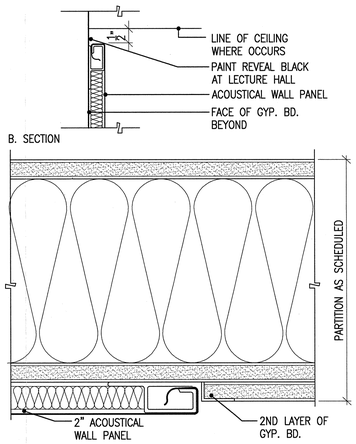

12 DETAIL AT ACOUSTICAL WALL PANEL
SCALE 6"=1'-0" CODE
FILE A10.20 INTERIOR DETAILS SPEC
5/18/07

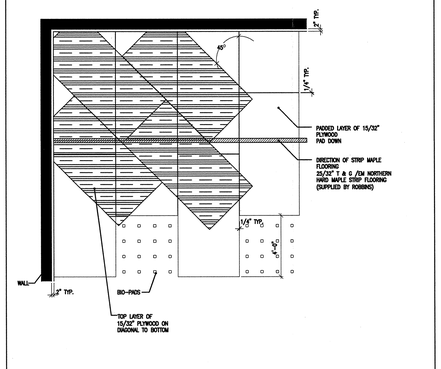

9 BIO-CUSHION / SUBFLOOR LAYOUT
SCALE 1/2" = 1'-0" CODE
FILE A10.20 INTERIOR DETAILS SPEC
5/18/07

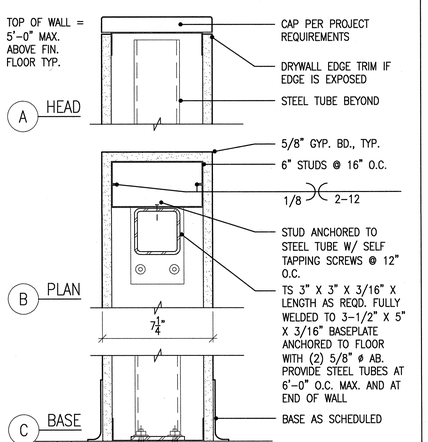

6 LOW WALL SUPPORT
SCALE 3"=1'-0" CODE CBC 2001
FILE 09250-438-MS SPEC 0.38 < Ca <= 0.52

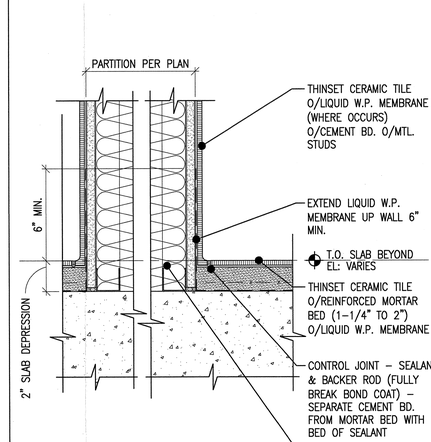

3 WALL BASE AT DEPRESSED TILE FLOOR
SCALE 3" = 1'-0" CODE
FILE A10.20 INTERIOR DETAILS SPEC
5/18/07

PLOT DATE:

COPYRIGHT © 2004 BY KMD (KAPLAN McLAUGHLIN DIAZ). ALL RIGHTS RESERVED.

PATH: G:\000\000-000\ACAD\SHEETS\

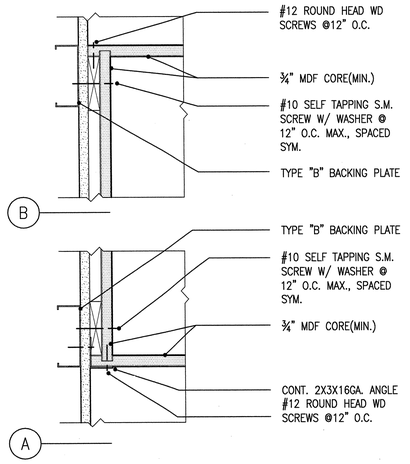

14 UPPER CASEWORK SEISMIC ANCHORAGE
SCALE 3"=1'-0" CODE SPEC
FILE 12350-04-GS

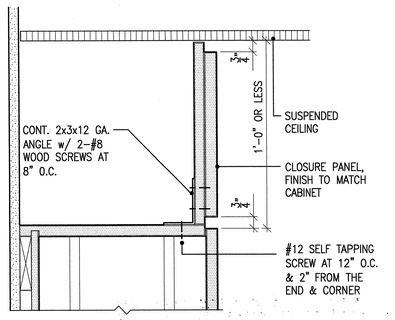

10 PANEL CLOSURE - 1'-0" OR LESS
SCALE 3"=1'-0" CODE SPEC
FILE 12350-40-GS

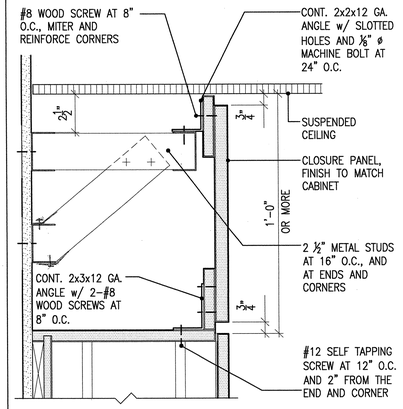

7 PANEL CLOSURE - GREATER THAN 1'-0"
SCALE 3"=1'-0" CODE SPEC
FILE 12350-41-GS

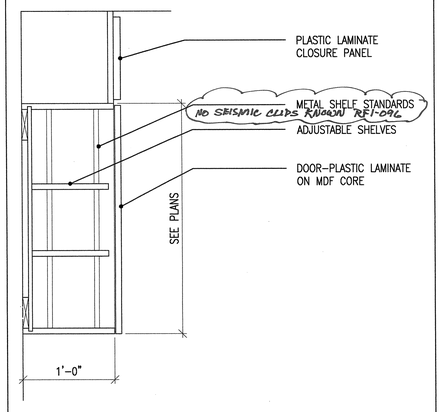

4 WALL CABINET
SCALE 1 1/2"=1'-0" CODE SPEC
FILE 12350-07-GS

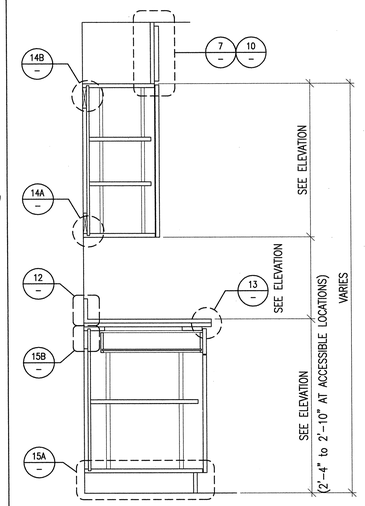

1 CASEWORK DIAGRAM
SCALE 1"=1'-0" CODE SPEC
FILE 12350-01-GS

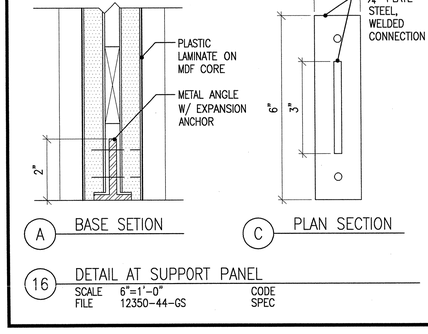

15 LOWER CASEWORK SEISMIC ANCHORAGE
SCALE 3"=1'-0" CODE SPEC
FILE 12350-05-GS

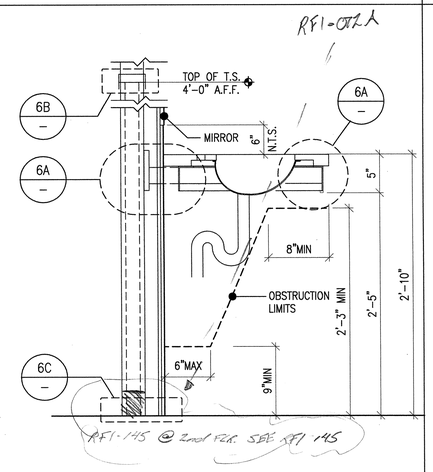

11 SECTION COUNTER TOP LAV SUPPORT
SCALE 1 1/2" = 1'-0" CODE SPEC
FILE A-DTIN-52 12/7/05

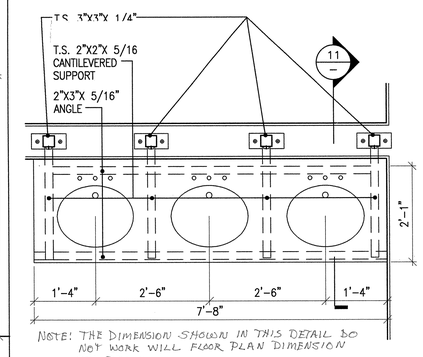

8 PLAN AT LAV. COUNTERTOP
SCALE 3/4"=1'-0" CODE SPEC
FILE 10960-11-GS

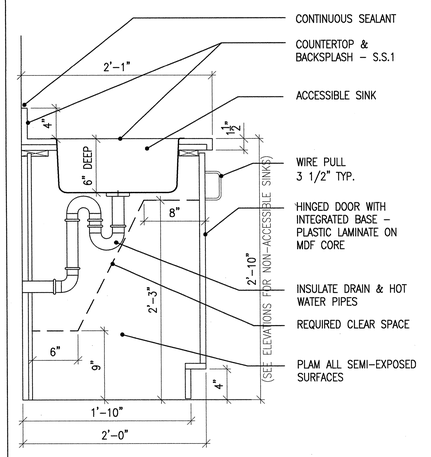

5 ACCESSIBLE SINK CABINET - W/DOOR
SCALE 1 1/2"=1'-0" CODE SPEC
FILE 12350-21-GS

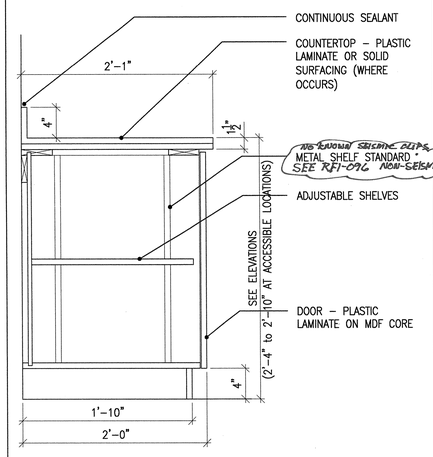

2 BASE CABINET - DOOR
SCALE 1 1/2"=1'-0" CODE SPEC
FILE 12350-08-GS

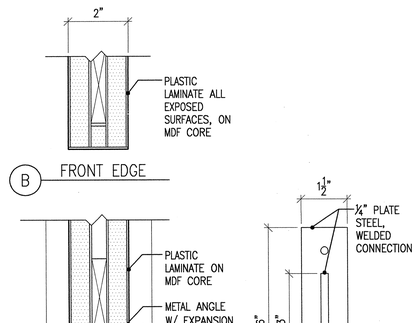

16 DETAIL AT SUPPORT PANEL
SCALE 6"=1'-0" CODE SPEC
FILE 12350-44-GS

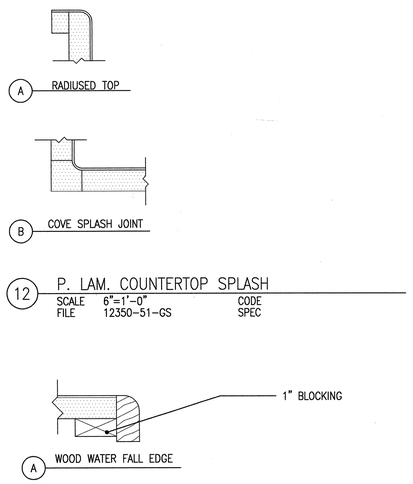

12 P. LAM. COUNTERTOP SPLASH
SCALE 6"=1'-0" CODE SPEC
FILE 12350-51-GS

13 P. LAM. COUNTERTOP NOSING
SCALE 6"=1'-0" CODE SPEC
FILE 12350-50-GS

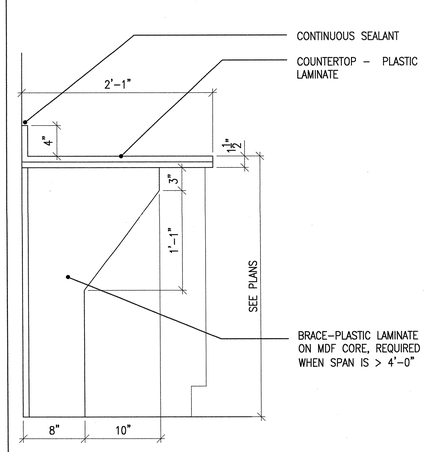

9 BASE CABINET - COUNTERTOP BRACE
SCALE 1 1/2"=1'-0" CODE SPEC
FILE 12350-15-GS

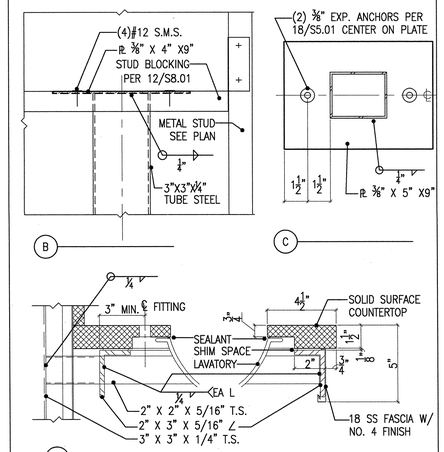

6 SECTION AT LAV. COUNTERTOP
SCALE 3"=1'-0" CODE SPEC
FILE 10960-12-GS

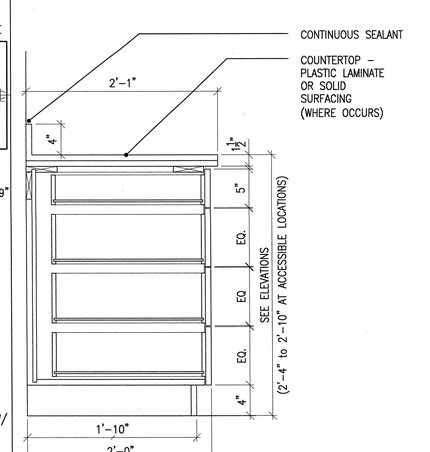

3 BASE CABINET - 4 DRAWER
SCALE 1 1/2"=1'-0" CODE SPEC
FILE 12350-14-GS

APPROVAL STAMP
IDENTIFICATION STAMP
DIVISION OF THE STATE ARCHITECT
APP. NO. 107417
AC RM FLS PH SS MM
DATE: 12/21/05

NO.	ISSUED FOR	DATE
1	DSA APPROVAL SET	12/08/05

LICENSED ARCHITECT ROY S. LAPKA NO. C7256 REN. 7-31-07 STATE OF CALIFORNIA
CERTIFIED BY

K M D
KAPLAN McLAUGHLIN DIAZ
ARCHITECTURE PLANNING
222 VALLEJO SAN FRANCISCO, CA 94111
(415) 398-5191 FAX (415) 394-7158

SOLANO COMMUNITY COLLEGE

SCCD
VALLEJO CENTER
Contract # A003.6123.01.V1

PROJECT NO. 419-201
DATE 12-08-05

CASEWORK DETAILS
AS BUILTS

A10.22

PLOT DATE:

COPYRIGHT © 2004 BY KMD (KAPLAN McLAUGHLIN DIAZ). ALL RIGHTS RESERVED.

PATH: G:\000\000-000\ACAD\SHEETS\

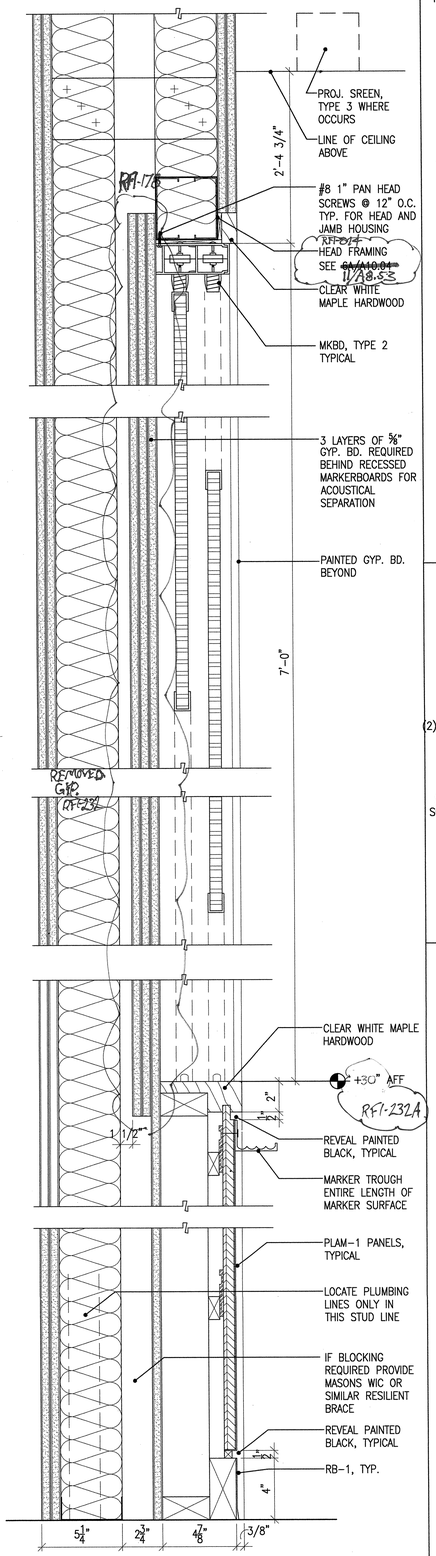

15 DETAIL AT LECTURE TEACHING WALL
SCALE 3"=1'-0" CODE
FILE A10.23 CASEWORK DETAILS SPEC
12/7/05

RFI-014

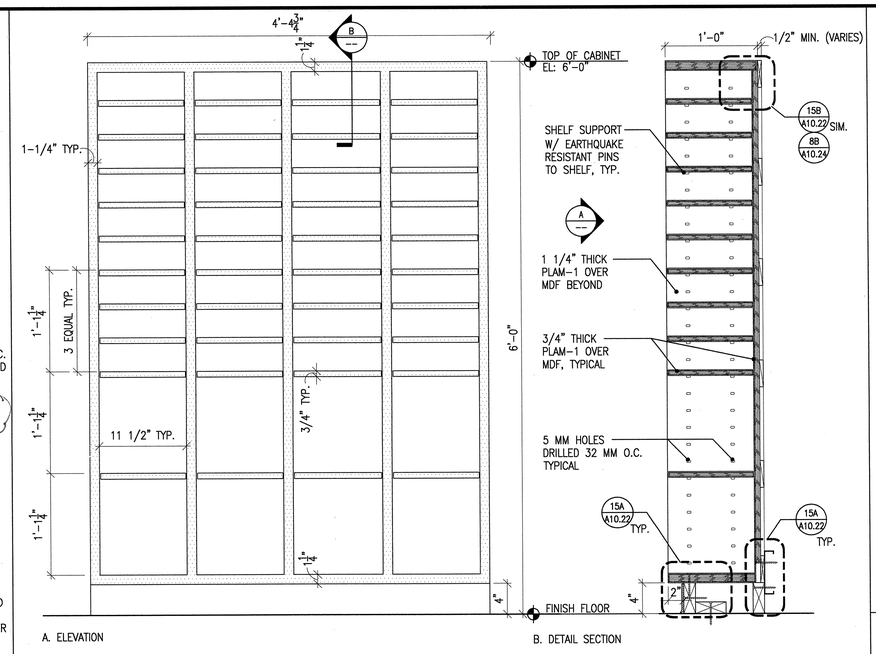

10 DETAIL AT RECEPTION MAILBOX/STORAGE
SCALE 1 1/2"=1'0" CODE
FILE A10.23 CASEWORK DETAILS SPEC
12/7/05

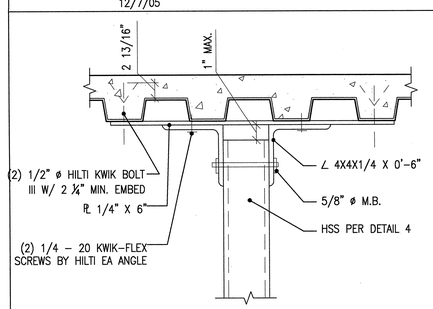

11 TUBE STEEL SUPPORT AT DECK ABOVE
SCALE 3"=1'-0" CODE
FILE A10.23 CASEWORK DETAILS SPEC
12/7/05

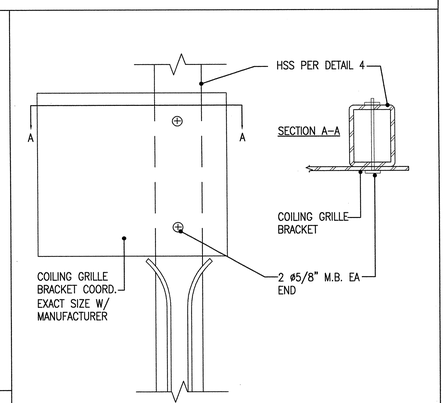

8 COILING GRILLE HOUSING ATTACHMENT
SCALE N.T.S. CODE
FILE A10.23 CASEWORK DETAILS SPEC
12/7/05

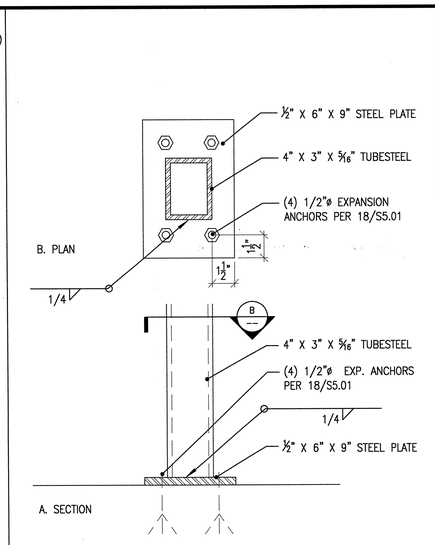

4 DETAIL AT TUBESTEEL SUPPORT
SCALE 3"=1'-0" CODE
FILE A10.23 CASEWORK DETAILS SPEC
12/7/05

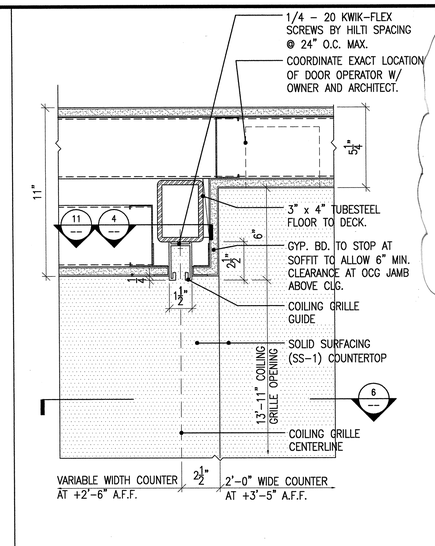

1 OVERHEAD COILING GRILLE JAMB AT PARTITION
SCALE 3" = 1'-0" CODE
FILE A10.23 CASEWORK DETAILS SPEC
12/7/05

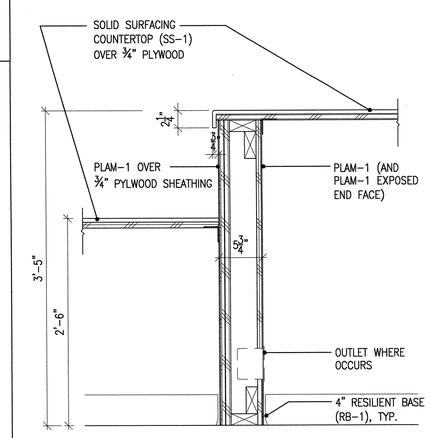

5 DETAIL SECTION AT RECEPTION DESK
SCALE CODE
FILE A10.23 CASEWORK DETAILS SPEC
12/7/05

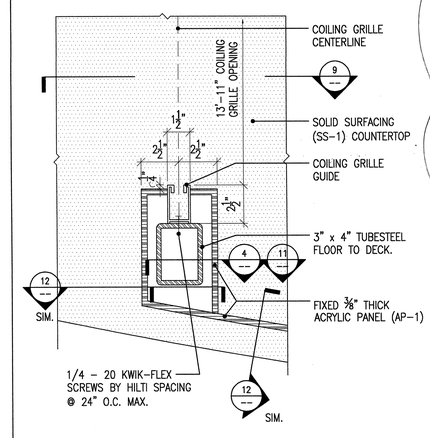

2 OVERHEAD COILING GRILLE JAMB
SCALE 3" = 1'-0" CODE
FILE A10.23 CASEWORK DETAILS SPEC
12/7/05

15 DETAIL AT LECTURE TEACHING WALL
SCALE 3"=1'-0" CODE
FILE A10.23 CASEWORK DETAILS SPEC
12/7/05

RFI-014

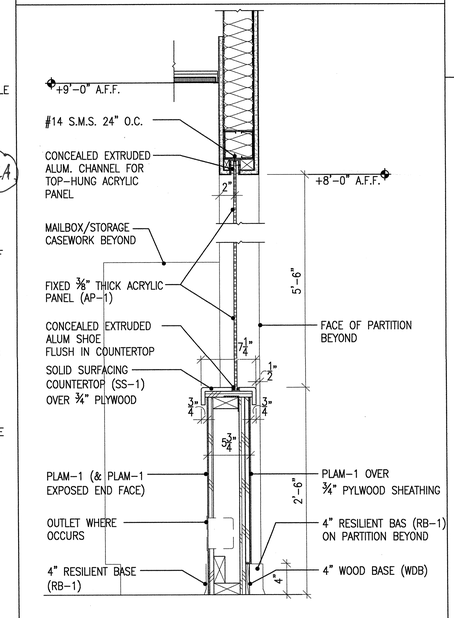

12 DETAIL AT ACYRLIC PANEL
SCALE 1 1/2"=1'-0" CODE
FILE A10.23 CASEWORK DETAILS SPEC
12/7/05

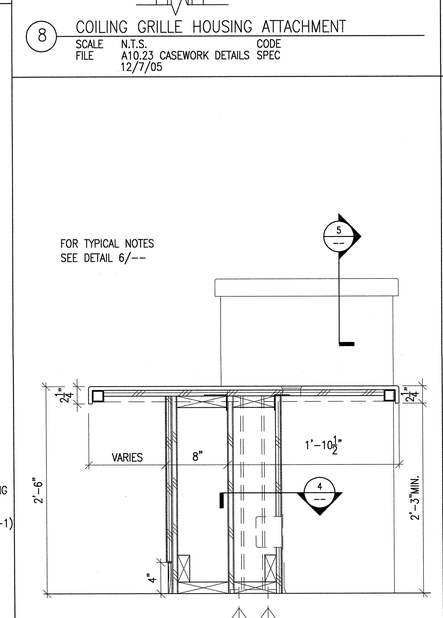

9 DETAIL SECTION AT RECEPTION DESK
SCALE 1 1/2" = 1'-0" CODE
FILE A10.23 CASEWORK DETAILS SPEC
12/7/05

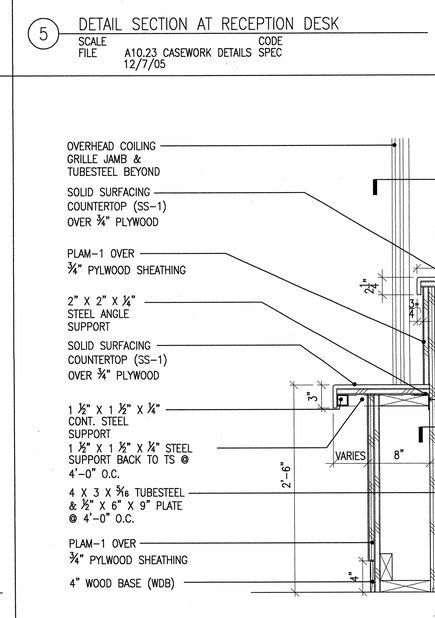

6 DETAIL SECTION AT RECEPTION DESK
SCALE 1 1/2" = 1'-0" CODE
FILE A10.23 CASEWORK DETAILS SPEC
12/7/05

Copy sent by e-mail to: East Bay Drywall on 11/10/06

Ralph Larsen & Son, Inc.
General Contractors License No. 185241
P.O. Box 1235
San Mateo, CA 94401-0231
Phone (650) 579-0239
Fax (650) 579-0241

Request for Information 178

Closed, RFIs Grouped by RFI Number

Vanpa Center for Solano Community College Dis
Northgate Business Park
Suisun Valley Parkway
Dixon, CA 94531

Project # 3604
Tel: (707) 649-8227 Fax: (707) 553-9728

Ralph Larsen & Son, Inc.

RFI #: 178

Date Created: 11/8/2006

Answer Company | Answered By | Author Company | Authored By
Ralph Larsen & Son, Inc. | Jay Tucker
550 Bin Avenue
San Mateo, CA 94401

Co-Respondent | Author RFI Number

Subject | Discipline | Category
Tie support for gyp bd at 24 feet wide opening

Cc: Company Name | Contact Name | Copies | Notes

Question | Date Required: 11/9/2006
Wall elevation 2/A.01 shows the marker board openings total 24 feet wide. Section view 15/A10.23 does not show any framing support (excluding the header, low partition, and jambs) that will support the three layers of gyp bd in the center portion of the opening. Please advise how the gyp bd will be supported in the center portion of the opening. Will the header be tied to the structural bearing wall and only install two layers of GYP BD behind the marker board openings. This would be a no cost change and achieve support for the GYP BD.
RFI-178 confirms my understanding of phone conversations with Melanie Kung that KMD accepts this solution for support of GYP BD at the marker boards/opening.

Suggestion

Answer | Date Answered:
KMD confirms, contractor solution accepted.
Melanie Kung/KMD
11/8/06

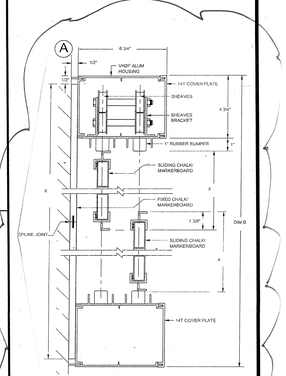

NEW DETAIL FOR SLIDING MARKER RFI 232

APPROVAL STAMP
IDENTIFICATION STAMP
DIVISION OF THE STATE ARCHITECT
APP. 04 107417
AC FLS TH SS AR
DATE: 12/21/05

NO.	ISSUED FOR	DATE
1	DSA APPROVAL SET	12/08/05

LICENSED ARCHITECT RON S. KAWA NO. C7256 REN. 7-31-07 STATE OF CALIFORNIA
CERTIFIED BY

K M D
KAPLAN McLAUGHLIN DIAZ
ARCHITECTURE PLANNING
222 VALLEJO SAN FRANCISCO, CA 94111
(415) 398-5191 FAX (415) 394-7158

SOLANO COMMUNITY COLLEGE

SCCD
VALLEJO CENTER
Contract # A003.6123.01.V1

PROJECT NO. 419-201
DATE 12-08-05

CASEWORK DETAILS
AS BUILTS

A10.23

PLOT DATE:

COPYRIGHT © 2004 BY KMD (KAPLAN McLAUGHLIN DIAZ). ALL RIGHTS RESERVED.

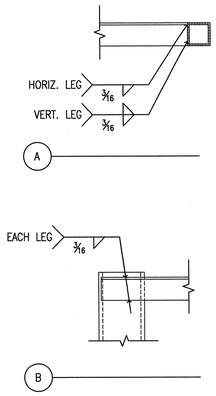

10 RECEPTION DESK SUPPORT CONNECTIONS
SCALE 3"=1'-0" CODE
FILE A-DTIN-55 SPEC
12/6/05

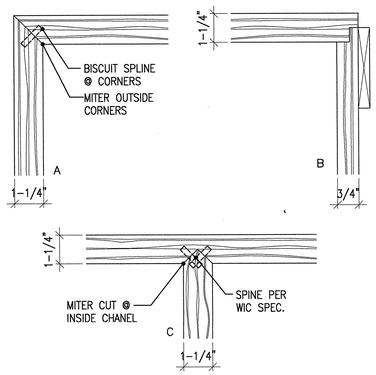

8 DETAIL AT MAILBOX/STORAGE
SCALE NO SCALE CODE
FILE A10.24 CASEWORK DETAILS SPEC
12/6/05

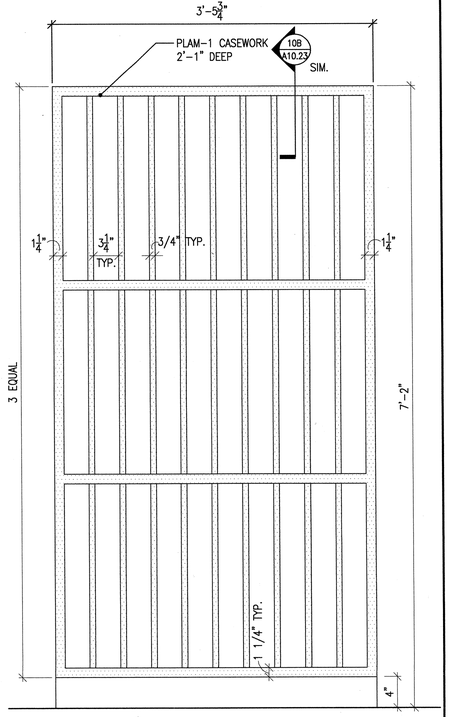

2 DETAIL AT ART ROOM BOARD STORAGE
SCALE 1 1/2"=1'0" CODE
FILE A10.24 CASEWORK DETAILS SPEC
12/6/05

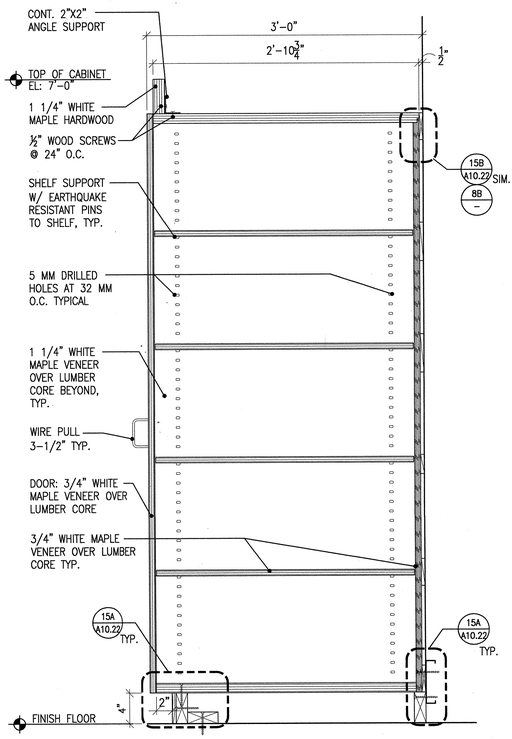

15 DETAIL AT MULTI-USE ROOM DEEP STORAGE
SCALE 1 1/2"=1'0" CODE
FILE A10.24 CASEWORK DETAILS SPEC
12/6/05

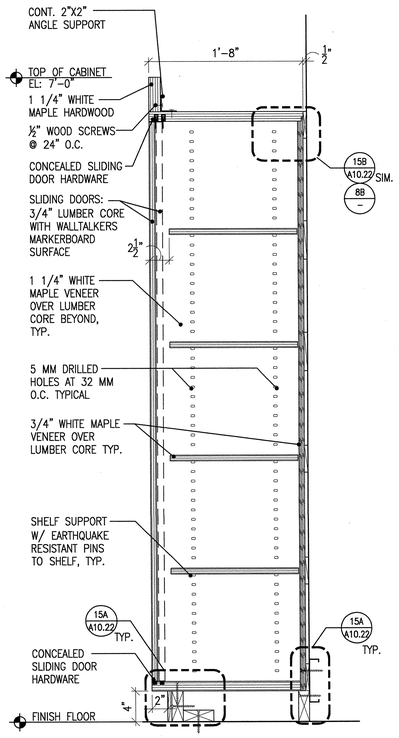

12 DETAIL AT MULTI-USE ROOM SLIDING DOOR CABINETS
SCALE 1 1/2"=1'0" CODE
FILE A10.24 CASEWORK DETAILS SPEC
12/6/05

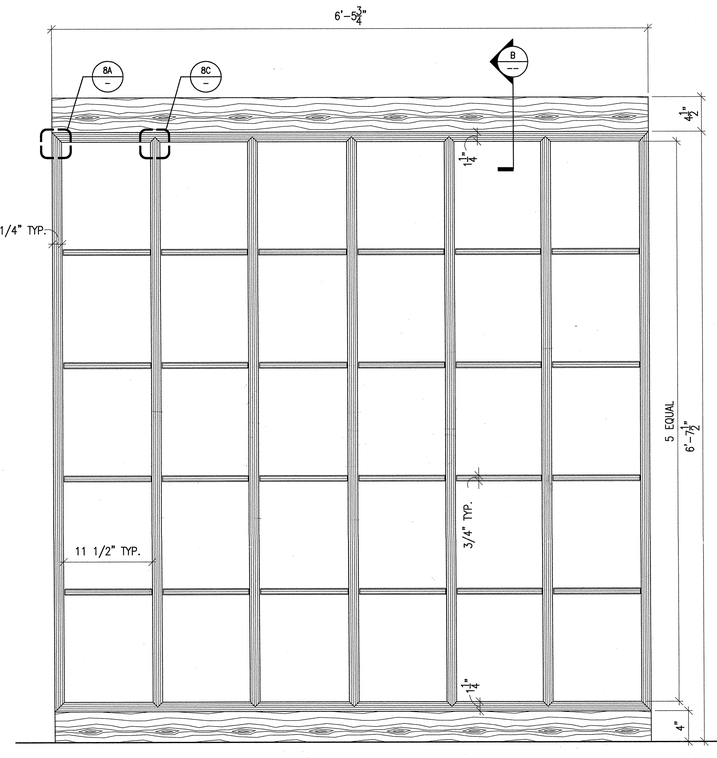

A. ELEVATION

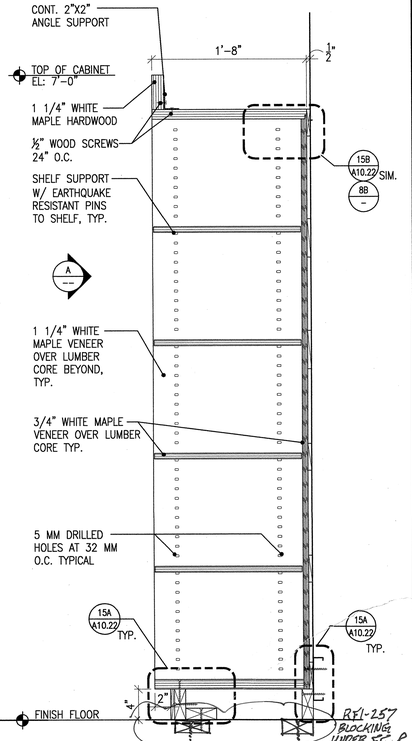

B. DETAIL SECTION

9 DETAIL AT MULTI-USE ROOM OPEN CUBBIES
SCALE 1 1/2"=1'0" CODE
FILE A10.24 CASEWORK DETAILS SPEC
12/6/05

APPROVAL STAMP
IDENTIFICATION STAMP
DIVISION OF THE STATE ARCHITECT
APP'D:- 107417
AC FLS TH SS NC
DATE: 12/21/05

NO.	ISSUED FOR	DATE
1	DSA APPROVAL SET	12/08/05

LICENSED ARCHITECT ROY S. LAMKO NO. C7256 RENEWAL 7-31-07 STATE OF CALIFORNIA
CERTIFIED BY

K M D
KAPLAN McLAUGHLIN DIAZ
ARCHITECTURE PLANNING
222 VALLEJO SAN FRANCISCO, CA 94111
(415)398-5191 FAX (415)394-7158

SOLANO COMMUNITY COLLEGE

SCCD
VALLEJO CENTER
Contract # A003.6123.01.V1

PROJECT NO. 419-201
DATE 12-08-05

CASEWORK DETAILS
AS BUILTS

A10.24

COPYRIGHT © 2004 BY KMD (KAPLAN McLAUGHLIN DIAZ). ALL RIGHTS RESERVED.

ABBREVIATIONS

AB	AGGREGATE BASE	INV.	INVERT ELEVATION
AC	ASPHALT CONCRETE	IRR	IRRIGATION
AD	AREA DRAIN	JB	JUNCTION BOX
APPROX	APPROXIMATELY	LF	LINEAL FEET
BLDG	BUILDING	LT	LEFT
BM	BENCH MARK	MAX	MAXIMUM
BSW	BACK OF SIDEWALK	MH	MANHOLE
BW	FG EL. AT BOTTOM OF WALL	MIN	MINIMUM
C	CONCRETE	MON	MONUMENT
C&G	CURB AND GUTTER	N	NORTH
CB	CATCH BASIN	(N)	NEW
CI	CURB INLET	NIC	NOT INCLUDED IN CONTRACT
CL	CLASS	NO., #	NUMBER
C/L	CENTERLINE	NTS	NOT TO SCALE
CO	CLEAN OUT	OC	ON CENTER
COR	CORNER	OD	OUTSIDE DIAMETER
CR	CURB RETURN	OG	ORIGINAL GROUND
CTR	CENTER	P	PAVEMENT FINISH ELEVATION
DI	DROP INLET	PCC	PORTLAND CEMENT CONCRETE
DIA, ø	DIAMETER	POC	POINT OF CONNECTION
DIST	DISTANCE	PI	POINT OF INTERSECTION
E	ELECTRIC	PL	PROPERTY LINE
EA	EACH	R	RADIUS
EL.	ELEVATION	REINF	REINFORCED
EP	EDGE OF PAVEMENT	RT	RIGHT
EW	EACH WAY	R/W	RIGHT OF WAY
EX.	EXISTING	RWD	REDWOOD
FC	FACE OF CURB	S =	SLOPE EQUALS
FDC	FIRE DEPARTMENT CONNECTION	SD	STORM DRAIN
FF	FINISH FLOOR	SPECS	SPECIFICATIONS
FG	FINISH GRADE	SQ	SQUARE
FH	FIRE HYDRANT	SS	SANITARY SEWER
FI	FIELD INLET	STA	STATION
FL	FLOW LINE	STD	STANDARD
FLG	FLANGE	SW	SIDEWALK
FT	FOOT OR FEET	TC	TOP FACE OF CURB
FW	FIRE WATER	TEMP	TEMPORARY
G	GAS	TW	FG EL. AT TOP OF WALL
GB	GRADE BREAK	TYP	TYPICAL
GR	GRATE	U/G	UNDERGROUND
GRD	GRADE	UNO	UNLESS NOTED OTHERWISE
GRND	GROUND	UTIL	UTILITY
HB	HOSE BIB	V, VERT.	VERTICAL
H, HORZ.	HORIZONTAL	VC	VERTICAL CURVE
HP	HIGH POINT	VSFCD	VALLEJO SANITARY AND FLOOD CONTROL DISTRICT
HT	HEIGHT	W	WATER
ID	INSIDE DIAMETER	W/	WITH
IN	INCH OR INCHES	WV	WATER VALVE
		XING	CROSSING

GENERAL CIVIL NOTES:

1. EXISTING TOPOGRAPHY AND CONTROL INFORMATION SHOWN IS FROM 2005 SURVEY BY ROBERT A. KARN, 707 BECK AVENUE, FAIRFIELD, CALIFORNIA (707) 435-9999.

   BASIS OF BEARINGS:
   BASIS OF BEARINGS FOR THIS SURVEY IS THE SAME AS SHOWN ON THAT PARCEL MAP FILED ON JULY 30, 2003, IN BOOK 44 OF PARCEL MAPS, AT PAGES 69 THROUGH 73, SOLANO COUNTY RECORDS. BEARINGS ARE BASED ON THE CALIFORNIA COORDINATE SYSTEM ZONE II, NAD 1927.

   BENCH MARK:
   BRASS DISC SET IN CONCRETE, FLUSH WITH THE GROUND @ CENTERLINE STATION 40+69.77 (POINT OF TANGENCY), COLUMBUS PARKWAY, STAMPED "SOLANO COUNTY".

   ELEVATION: 231.65 CITY OF VALLEJO DATUM
   ELEVATION: 225.31 NAD 1929 DATUM
   ELEVATION: 227.92 NAVD 1988 DATUM

   TOPOGRAPHY:
   CONTOURS AND ELEVATIONS SHOWN ON THIS MAP ARE BASED ON CITY OF VALLEJO DATUM. SEE BENCHMARK INFORMATION ON THIS SHEET.

   TOPOGRAPHY SHOWN ON THIS MAP IS SUBJECT TO CHANGE DUE TO ONGOING CONSTRUCTION. LOCATIONS OF UTILITIES, GRADING, DITCHES, ETC. MAY NOT BE AS SHOWN AND SHOULD BE VERIFIED IN THE FIELD.

   TOPOGRAPHY ON COLUMBUS PARKWAY IS A COMBINATION OF AERIAL & FIELD TOPOGRAPHY SURVEYED IN APRIL, 2003.

   TOPOGRAPHY SOUTH OF COLUMBUS PARKWAY IS BASED ON FIELD TOPOGRAPHY SURVEYED IN OCTOBER, 2003.

2. REFERENCES TO THE "STATE STANDARD SPECIFICATIONS AND PLANS" (CALTRANS) ARE TO THE JULY 2002 EDITION.

3. IT IS THE CONTRACTOR'S RESPONSIBILITY TO OBTAIN COPIES OF ALL CURRENT DETAILS AND STANDARD DRAWINGS OF ALL THE PUBLIC AND PRIVATE AGENCIES.

4. IN THE EVENT OF ANY DISCREPANCY BETWEEN ANY DRAWING AND THE FIGURES WRITTEN THEREON, THE FIGURES SHALL BE TAKEN AS CORRECT.

5. THE CONTRACTOR SHALL EXPOSE AND CHECK INVERTS ON EXISTING STORM DRAINS AND SANITARY SEWERS AND CHECK CLEARANCES OF KNOWN CROSSINGS OF OTHER UTILITIES BEFORE TRENCHING OR INSTALLING NEW PIPE LINES.

6. THE EXISTENCE AND LOCATIONS OF ANY UNDERGROUND UTILITY PIPELINES OR STRUCTURES SHOWN ON THESE PLANS WERE OBTAINED BY A SEARCH OF THE AVAILABLE RECORDS AND IN SOME CASES BY A FIELD SURVEY. THE PROJECT CIVIL ENGINEER MAKES NO REPRESENTATION AS TO THE ACCURACY OR COMPLETENESS OF THE LOCATION OF EXISTENCE OR NON-EXISTENCE OF ANY UNDERGROUND UTILITIES OR STRUCTURES WITHIN THE LIMITS OF THE PROJECT. THE CONTRACTOR AGREES TO ASSUME LIABILITY AND TO HOLD OWNER, ARCHITECT, ENGINEER AND CITY HARMLESS FOR ANY DAMAGES RESULTING FROM THE EXISTENCE OF UNDERGROUND UTILITIES OR STRUCTURES NOT OF RECORD OR NOT SHOWN ON THESE PLANS. THE CONTRACTOR IS REQUIRED TO TAKE DUE PRECAUTIONARY MEASURES TO PROTECT THE UTILITIES OR STRUCTURES SHOWN AND ANY OTHER UTILITIES OR STRUCTURES FOUND AT THE SITE.

7. THE CONTRACTOR SHALL CONTACT "UNDERGROUND SERVICE ALERT" AT (800) 642-2444 AT LEAST 72 HOURS PRIOR TO ANY CONSTRUCTION.

8. IT SHALL BE THE CONTRACTOR'S RESPONSIBILITY TO NOTIFY THE PROJECT CIVIL ENGINEER OF ANY DIFFERENCES OF LOCATION OF EXISTING UTILITIES FROM THAT SHOWN, OR ANY CONFLICTS WITH THE DESIGN BEFORE CONTINUING WORK IN THAT AREA.

[illegible]ACTOR SHALL MAINTAIN ALL DRAINAGE WITHIN THE CONSTRUCTION AREA [illegible]RAINAGE IMPROVEMENTS ARE IN PLACE AND ACCEPTED.

10. THE CONTRACTOR SHALL OBTAIN ALL NECESSARY PERMITS. THE CONTRACTOR SHALL OBTAIN A HYDRANT WATER METER AND PERMIT FROM THE CITY PRIOR TO USE OF ANY CITY WATER FOR CONSTRUCTION PURPOSES.

11. ALL EARTHWORK SHALL BE PERFORMED IN ACCORDANCE WITH THE REQUIREMENTS OF "GEOTECHNICAL INVESTIGATION ON PROPOSED SOLANO COMMUNITY COLLEGE, NORTHGATE BUSINESS PARK – PARCEL 8, COLUMBUS PARKWAY, VALLEJO, CA, FOR KCEM – SOLANO COMMUNITY COLLEGE" DATED 1 NOVEMBER, 2004, PREPARED BY KC ENGINEERING COMPANY, VACAVILLE, CA, 707-447-4025

12. THE CONTRACTOR WILL BE RESPONSIBLE FOR PREVENTING AIRBORNE DUST NUISANCE FROM THE CONSTRUCTION SITE BY WATERING AND/OR TREATING THE SITE IN SUCH A MANNER TO CONFINE DUST PARTICLES TO THE IMMEDIATE SURFACE OF WORK.

13. CONTRACTOR TO NOTIFY CITY OF VALLEJO PUBLIC WORKS DEPARTMENT TWO (2) WORKING DAYS PRIOR TO START OF WORK.

14. ALL WORK WITHIN THE PUBLIC RIGHT-OF-WAY OR PUBLIC EASEMENTS WILL REQUIRE AN ENCROACHMENT PERMIT AND SHALL BE SUBJECT TO INSPECTION BY THE CITY OF VALLEJO PUBLIC WORKS DEPARTMENT. THE CONTRACTOR SHALL APPLY FOR THE ENCROACHMENT PERMIT FROM THE CITY AND PAY AN ENCROACHMENT PERMIT FEE. PROVIDE 48 HOUR ADVANCE NOTICE, PHONE 707-648-4315.

15. SHOULD IT APPEAR THAT THE WORK TO BE DONE OR ANY MATTER RELATIVE THERETO, IS NOT SUFFICIENTLY DETAILED OR EXPLAINED ON THESE PLANS, THE CONTRACTOR SHALL CONTACT CREEGAN + D'ANGELO CONSULTING ENGINEERS AT (707) 429-5300 FOR SUCH FURTHER EXPLANATIONS AS MAY BE NECESSARY.

16. ALL STREET MONUMENTS, LOT CORNER PIPES AND OTHER PERMANENT MONUMENTS DISTURBED DURING THE PROCESS OF CONSTRUCTION SHALL BE REPLACED BY THE CONTRACTOR.

17. EXISTING PUBLIC FACILITIES DAMAGED DURING THE COURSE OF CONSTRUCTION SHALL BE REPAIRED/ REPLACED BY THE CONTRACTOR, AT HIS/HER EXPENSE, TO THE SATISFACTION OF THE CITY ENGINEER.

18. WORK HOURS SHALL BE LIMITED AS FOLLOWS: 7:00 AM – 6:00 PM, MONDAY THROUGH FRIDAY, UNLESS APPROVED OTHERWISE.

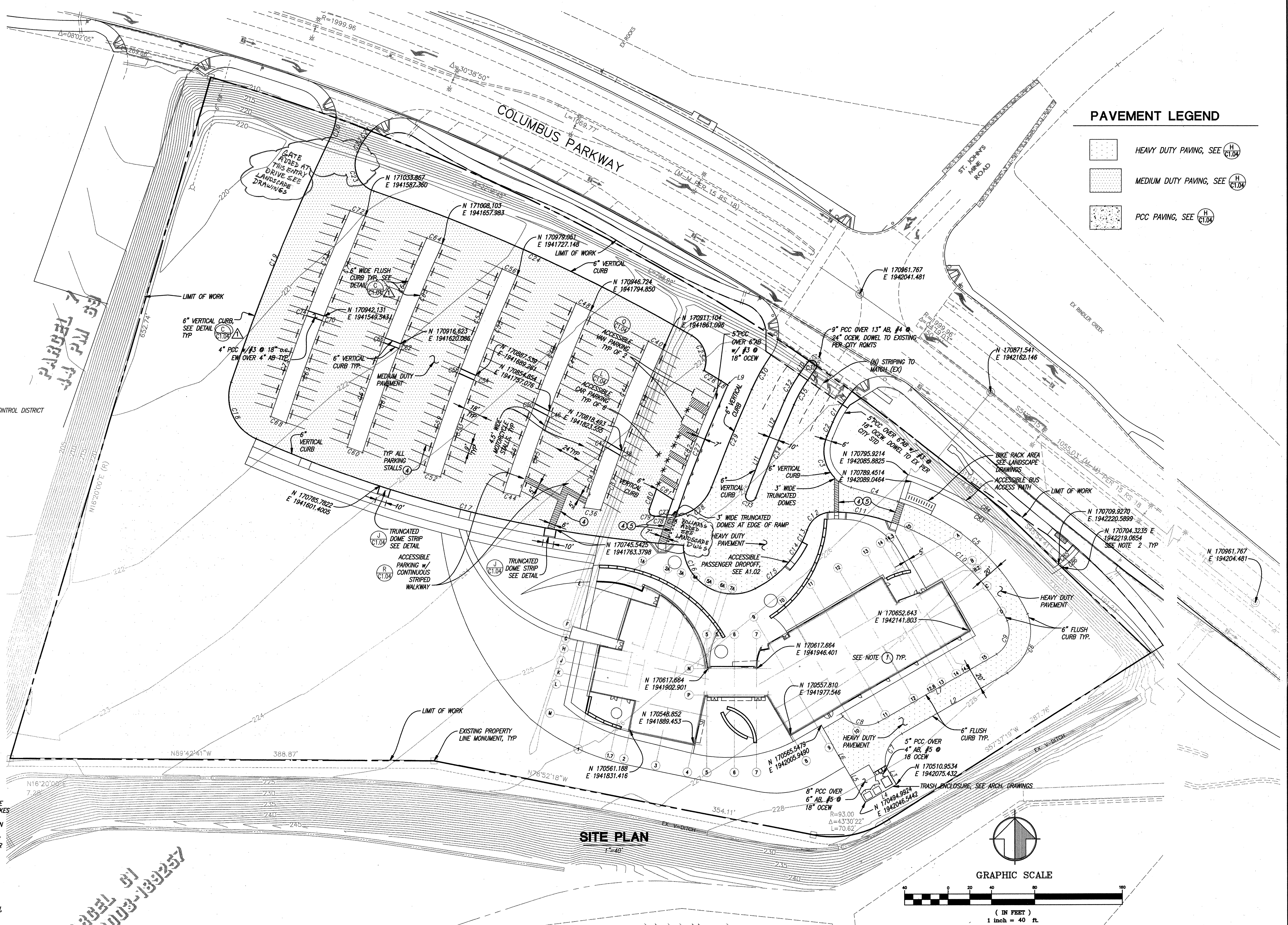

SITE PLAN
1"=40'

GRAPHIC SCALE
(IN FEET)
1 inch = 40 ft.

PAVEMENT LEGEND

- HEAVY DUTY PAVING, SEE H/C1.04
- MEDIUM DUTY PAVING, SEE H/C1.04
- PCC PAVING, SEE H/C1.04

SPECIAL NOTES:

1. COORDINATES SHOWN FOR BUILDING ARE CENTERLINE OF COLUMNS.
2. COORDINATES SHOWN FOR PAVEMENT ARE EDGE OF PAVEMENT OR FACE OF CURB.
3. SEE LANDSCAPE FOR LAYOUT OF CURVES AND LENGTHS.
4. 4" WIDE PAINTED WHITE MARKING PER STATE STD SPEC SECTION 84
5. 12" WIDE WHITE THERMOPLASTIC MARKING PER STATE STD SPEC SECTION 84 WITH CHEVRON STRIPES AT 3' ON CENTER.
6. SEE A1.30 FOR SIGNAGE BEYOND PARKING AREAS.

CURVE TABLE

CURVE	LENGTH	RADIUS	DELTA
C1	18.57	95.10	11°11'14"
C2	13.84	1448.65	0°32'51"
C3	59.97	35.00	98°10'24"
C4	44.55	813.26	3°08'20"
C5	162.99	197.62	47°15'18"
C6	62.45	45.42	78°47'00"
C7	35.08	29.09	69°05'14"
C8	35.63	28.00	72°54'27"
C9	35.05	25.41	79°01'27"
C10	143.37	178.87	45°55'31"
C11	58.83	146.48	23°00'43"
C12	28.34	24.14	67°16'16"
C13	12.00	98.07	7°00'40"
C14	20.00	98.07	11°41'06"
C15	41.04	98.07	23°58'35"
C16	91.22	44.60	117°11'40"
C17	406.65	1173.29	19°51'29"
C18	61.88	42.00	84°25'07"
C19	238.77	1976.65	6°55'16"
C20	23.44	67.18	19°59'29"
C21	9.13	86.65	6°02'16"
C22	15.27	57.88	15°06'41"

CURVE TABLE

CURVE	LENGTH	RADIUS	DELTA
C23	43.88	26.00	96°41'38"
C24	321.44	1593.22	11°33'35"
C25	37.04	26.00	81°37'10"
C26	18.17	1571.22	0°39'45"
C27	130.10	1550.62	4°48'26"
C28	44.63	42.00	60°53'14"
C29	97.24	1528.65	3°38'41"
C30	36.17	200.99	10°18'42"
C31	15.71	5.00	180°00'00"
C32	27.49	144.00	10°56'16"
C33	15.71	5.00	179°59'58"
C34	92.47	1487.65	3°33'41"
C35	25.58	134.00	10°56'16"
C36	15.22	1149.29	0°45'32"
C37	53.29	1617.65	1°53'15"
C38	5.08	1617.65	0°10'47"
C39	99.95	1617.65	3°32'24"
C40	15.07	1569.22	0°33'01"
C41	99.80	1632.65	3°30'08"
C42	5.07	1632.65	0°10'40"
C43	58.97	1632.65	2°04'10"
C44	15.07	1149.29	0°45'05"

CURVE TABLE

CURVE	LENGTH	RADIUS	DELTA
C45	78.05	1692.65	2°38'32"
C46	5.03	1692.65	0°10'13"
C47	99.35	1692.65	3°21'46"
C48	15.02	1569.22	0°32'54"
C49	99.27	1707.65	3°19'50"
C50	5.03	1707.65	0°10'07"
C51	81.93	1707.65	2°44'56"
C52	15.01	1149.29	0°44'53"
C53	93.90	1767.65	3°02'37"
C54	5.01	1767.65	0°09'45"
C55	99.06	1767.65	3°12'39"
C56	15.00	1569.22	0°32'52"
C57	99.03	1782.65	3°10'59"
C58	5.01	1782.65	0°09'39"
C59	96.01	1782.65	3°05'09"
C60	15.01	1149.29	0°44'54"
C61	100.96	1842.65	3°08'22"
C62	5.00	1842.65	0°09'20"
C63	99.03	1842.65	3°04'45"
C64	15.02	1569.22	0°32'54"
C65	99.05	1857.65	3°03'19"
C66	5.00	1857.65	0°09'15"

CURVE TABLE

CURVE	LENGTH	RADIUS	DELTA
C67	101.33	1857.65	3°07'31"
C68	15.07	1149.29	0°45'05"
C69	99.29	1917.65	2°57'59"
C70	5.00	1917.65	0°08'58"
C71	99.24	1917.65	2°57'54"
C72	15.07	1569.22	0°33'01"
C73	99.30	1932.65	2°56'38"
C74	5.00	1932.65	0°08'54"
C75	97.90	1932.65	2°54'08"
C76	7.59	42.00	10°21'08"
C77	2.71	42.00	3°41'53"
C78	9.51	1149.29	0°28'27"
C79	9.01	5.00	103°11'48"
C80	19.93	1575.65	0°43'29"
C81	18.47	1456.22	0°43'36"
C82	117.08	1557.62	4°18'25"
C83	156.71	350.29	25°37'58"
C84	161.19	355.29	25°59'42"
C85	27.89	83.76	19°14'53"
C86	33.30	84.76	22°30'49"

LINE TABLE

LINE	LENGTH	BEARING
L1	11.83'	N34°50'20"E
L2	111.91'	N60°12'45"E
L3	20.00'	N29°47'25"E
L4	33.00'	N60°12'35"W
L5	28.33'	N29°47'25"W
L6	50.56'	N29°58'52"E
L7	125.40'	N60°12'35"W
L8	6.06'	N58°03'08"W
L9	1.01'	N58°03'08"E
L10	13.52'	N34°50'20"E
L11	46.56'	N21°13'45"E
L12	46.56'	N23°00'38"E
L13	13.52'	N34°50'20"E

CIVIL SHEET INDEX

C1.01 SITE DIMENSIONAL PLAN
C1.02 CIVIL GRADING & DRAINAGE
C1.03 CIVIL UTILITIES
C1.04 CIVIL DETAILS
C1.05 CIVIL EROSION CONTROL

CALL BEFORE YOU DIG
UNDERGROUND SERVICE ALERT
USA
(800)227-2600

CELSOC
Consulting Engineers and Land Surveyors of California

CONSTRUCTION CONTRACTOR AGREES THAT IN ACCORDANCE WITH THE GENERALLY ACCEPTED CONSTRUCTION PRACTICES, CONSTRUCTION CONTRACTOR WILL BE REQUIRED TO ASSUME THE SOLE AND COMPLETE RESPONSIBILITY FOR JOB SITE CONDITIONS DURING THE COURSE OF CONSTRUCTION OF THE PROJECT, INCLUDING SAFETY OF ALL PERSONS AND PROPERTY; THAT THIS REQUIREMENT SHALL BE MADE TO APPLY CONTINUOUSLY AND NOT BE LIMITED TO NORMAL WORKING HOURS, AND CONSTRUCTION CONTRACTOR FURTHER AGREES TO DEFEND, INDEMNIFY AND HOLD DESIGN PROFESSIONAL HARMLESS FROM ANY AND ALL LIABILITY, REAL OR ALLEGED, IN CONNECTION WITH THE PERFORMANCE OF WORK ON THIS PROJECT, EXCEPTING LIABILITY ARISING FROM THE SOLE NEGLIGENCE OF DESIGN PROFESSIONAL.

UNAUTHORIZED CHANGES AND USES: THE ENGINEER PREPARING THESE PLANS WILL NOT BE RESPONSIBLE FOR, OR LIABLE FOR, UNAUTHORIZED CHANGES TO OR USES OF THESE PLANS. ALL CHANGES TO THE PLANS MUST BE IN WRITING AND MUST BE APPROVED BY THE PREPARER OF THESE PLANS.

C+D Consulting Civil and Structural Engineers
CREEGAN+D'ANGELO
2420 MARTIN ROAD, SUITE 380
FAIRFIELD, CALIFORNIA 94534-8610
TEL: (707)429-5300 FAX: (707)429-2086
FAIRFIELD • MONTEREY • PLEASANTON • SAN FRANCISCO • SAN JOSE, CALIFORNIA

APPROVAL STAMP
IDENTIFICATION STAMP
DIVISION OF THE STATE ARCHITECT
APPL 02– 107417
AC ______ FLS ______ SS ______
DATE: ______

NO.	ISSUED FOR	DATE
14		
13		
12		
11		
10		
9		
8		
7		
6		
5		
4		
3		
2		
1	ADDENDUM 1	02-03-06
1	DSA APPROVAL SET	12-08-05

REGISTERED PROFESSIONAL ENGINEER KENNETH R. SWENSON No. 43034 EXP. 3-31-06 CIVIL STATE OF CALIFORNIA
CERTIFIED BY

K M D
KAPLAN McLAUGHLIN DIAZ
ARCHITECTURE PLANNING
222 VALLEJO SAN FRANCISCO, CA 94111
(415) 398-5191 FAX (415) 394-7158

AS BUILTS

SOLANO COMMUNITY COLLEGE

SCCD
VALLEJO CENTER

PROJECT NO.	DATE
419-201	12-08-05

SITE DIMENSION PLAN

C1.01

DRAWING: P:\DRAW\60402100\C1.01.DWG
XREFS: A03098-TOPO-TRIMMED 03-31-05 A02062-BaseKMD11-29-04 ARCH-BLDG-COLUMN [illegible] arch_dimension plan A-Bldg a-tb X-TOPO Master Arch [illegible] 1:28:44 p.m.

PLOT DATE:

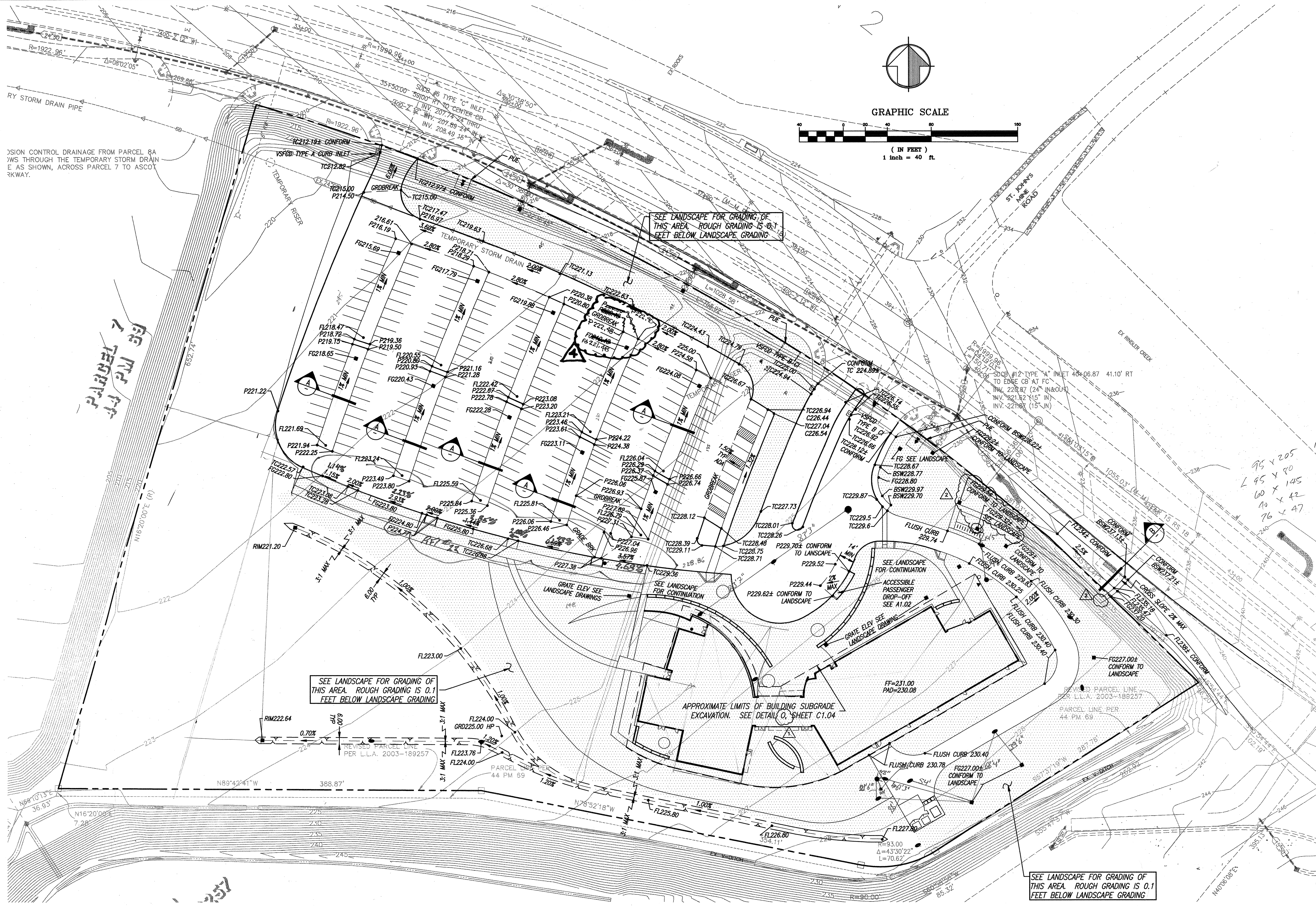

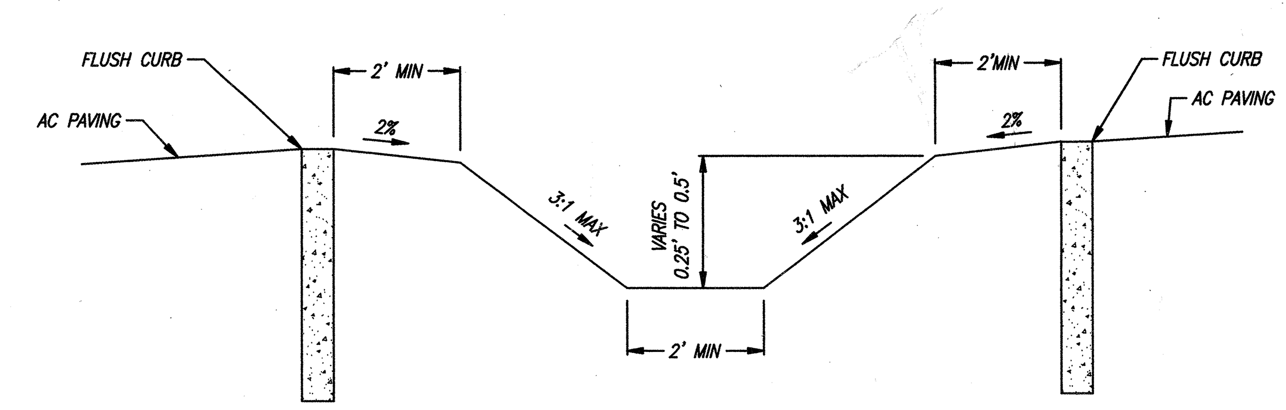

A TYPICAL BIOSWALE

NTS

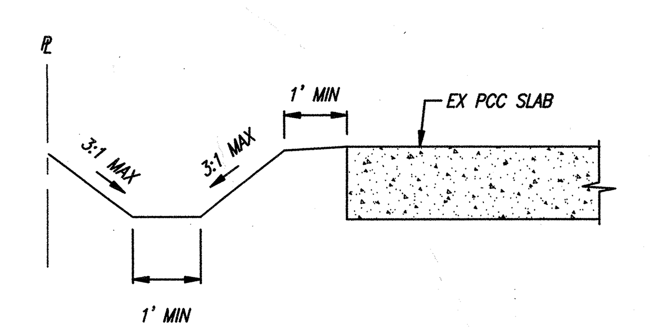

B GRADING AT BUS STOP IN R/W

NTS

CALL BEFORE YOU DIG — UNDERGROUND SERVICE ALERT — USA

(800)227-2600

CELSOC
Consulting Engineers and Land Surveyors of California

CONSTRUCTION CONTRACTOR AGREES THAT IN ACCORDANCE WITH THE GENERALLY ACCEPTED CONSTRUCTION PRACTICES, CONSTRUCTION CONTRACTOR WILL BE REQUIRED TO ASSUME THE SOLE AND COMPLETE RESPONSIBILITY FOR JOB SITE CONDITIONS DURING THE COURSE OF CONSTRUCTION OF THE PROJECT, INCLUDING SAFETY OF ALL PERSONS AND PROPERTY; THAT THIS REQUIREMENT SHALL BE MADE TO APPLY CONTINUOUSLY AND NOT BE LIMITED TO NORMAL WORKING HOURS, AND CONSTRUCTION CONTRACTOR FURTHER AGREES TO DEFEND, INDEMNIFY AND HOLD DESIGN PROFESSIONAL HARMLESS FROM ANY AND ALL LIABILITY, REAL OR ALLEGED, IN CONNECTION WITH THE PERFORMANCE OF WORK ON THIS PROJECT, EXCEPTING LIABILITY ARISING FROM THE SOLE NEGLIGENCE OF DESIGN PROFESSIONAL.

UNAUTHORIZED CHANGES AND USES: THE ENGINEER PREPARING THESE PLANS WILL NOT BE RESPONSIBLE FOR, OR LIABLE FOR, UNAUTHORIZED CHANGES TO OR USES OF THESE PLANS. ALL CHANGES TO THE PLANS MUST BE IN WRITING AND MUST BE APPROVED BY THE PREPARER OF THESE PLANS.

C+D Consulting Civil and Structural Engineers
CREEGAN+D'ANGELO
2420 MARTIN ROAD, SUITE 380
FAIRFIELD, CALIFORNIA 94534-8610
TEL: (707)429-5300 FAX: (707)429-2086
FAIRFIELD • MONTEREY • PLEASANTON • SAN FRANCISCO • SAN JOSE, CALIFORNIA

APPROVAL STAMP
IDENTIFICATION STAMP
DIVISION OF THE STATE ARCHITECT
APPL 02- 107417
AC ____ FLS ____ SS ____ 30
DATE: ____

NO.	ISSUED FOR	DATE
14		
13		
12		
11		
10		
9		
8		
7		
6		
5		
4		
3		
2	ADDENDUM 2	02-21-06
1	ADDENDUM 1	02-03-06
1	DSA APPROVAL SET	12-08-05

REGISTERED PROFESSIONAL ENGINEER KENNETH R. SWENSON No. 43034 EXP. 3-31-06 CIVIL STATE OF CALIFORNIA

CERTIFIED BY

K M D
KAPLAN McLAUGHLIN DIAZ
ARCHITECTURE PLANNING
222 VALLEJO SAN FRANCISCO, CA 94111
(415) 398-5191 FAX (415) 394-7158

AS BUILTS

SOLANO COMMUNITY COLLEGE

SCCD
VALLEJO CENTER

PROJECT NO.	DATE
419-201	12-08-05

GRADING AND DRAINAGE

C1.02

FEBRUARY 01, 2006 1:55:43 p.m.

XREFS: A03098-TOPO-TRIMMED 03-31-05 A02062-BaseKMD11-29-04 A-Bldg MASTER X-TOPO Master Arch 05-19-05 a-tb

DRAWING: P:\DRAW\6040210\C1.02.DWG

PLOT DATE:

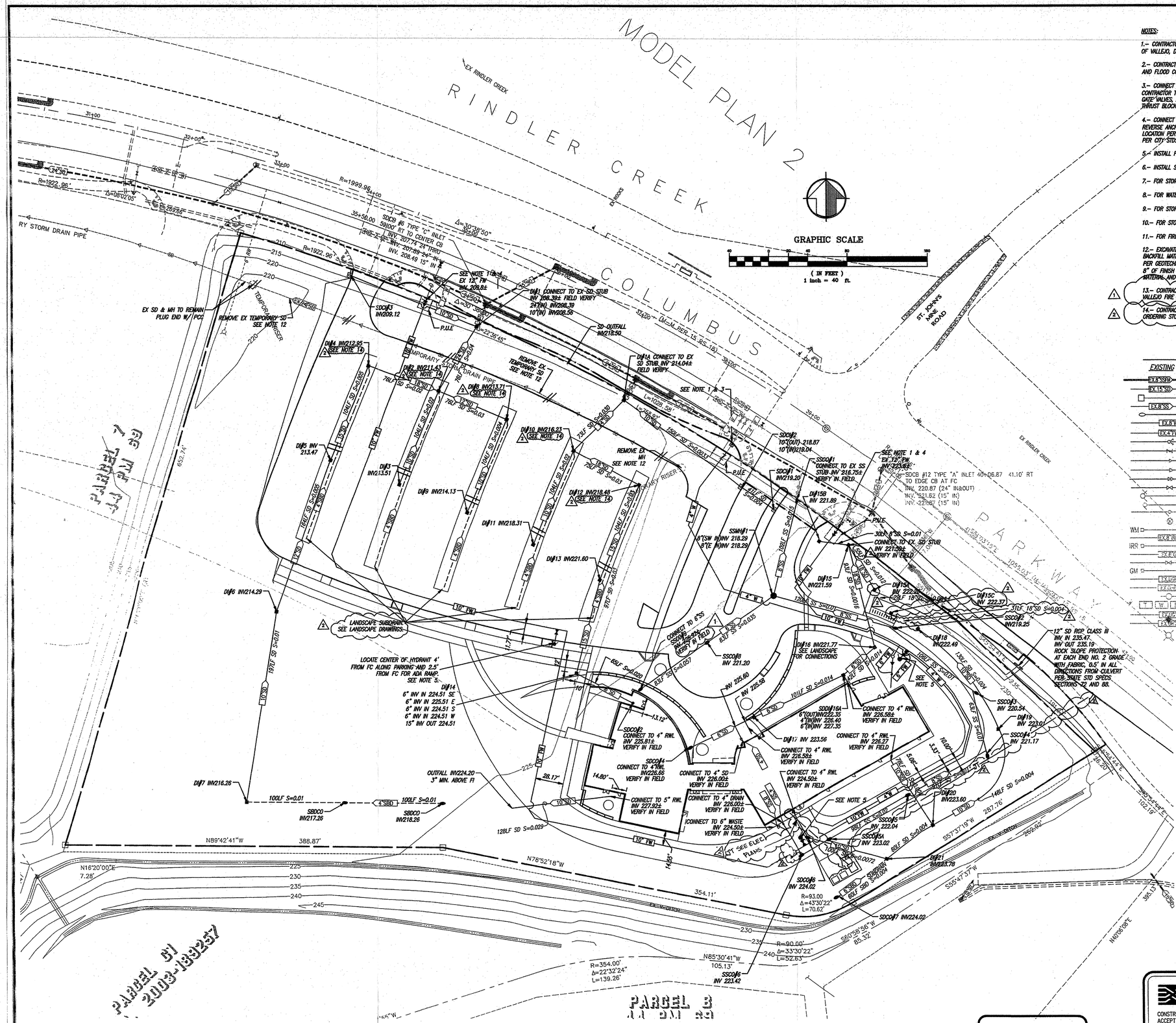

NOTES:

1.– CONTRACTOR IS REPONSIBLE FOR COORDINATING FIRE AND POTABLE WATER CONNECTION WITH THE CITY OF VALLEJO, DEPARTMENT OF PUBLIC WORKS, (707) 648–4315.

2.– CONTRACTOR IS REPONSIBLE FOR COORDINATING SS AND SD CONNECTION WITH THE VALLEJO SANITATION AND FLOOD CONTROL DISTRICT(VSFCD), (707) 644–8949.

3.– CONNECT NEW 4" W LINE TO EX. 4" SERVICE CONNECTION. DEPTH OF EXISTING SERVICE UNKNOWN. CONTRACTOR TO VERIFY IN FIELD. REMOVE TEMPORARY PLUG. INSTALL CONCENTRIC REDUCER, TWO 3" GATE VALVES, AND CONCENTRIC INCREASER PER CITY STDS. AND STD DETAILS 4–1, 4–05 AND 4–14. USE THRUST BLOCKS FOR W LINE PER CITY STDS AND STD DETAIL 4–06.

4.– CONNECT 10" FW TO EX. 12" FW SERVICES. REMOVE TEMPORARY 2" BLOWOFF ASSEMBLIES (INCLUDING REVERSE ANCHOR). INSTALL 12" TO 10" CONCENTRIC REDUCER AND TWO 10" GATE VALVES AT EACH LOCATION PER CITY STDS. AND CITY STD DETAILS 4–1, 4–05 AND 4–14. USE THRUST BLOCKS FOR FW PER CITY STDS AND STD DETAIL 4–06.

5.– INSTALL FIRE HYDRANTS PER CITY OF VALLEJO STD. DETAIL 4–05

6.– INSTALL SS CLEANOUTS PER DETAIL G/C1.04.

7.– FOR STORM DRAIN PIPE CROSSING OVER SS PIPE CROSSING, PROVIDE 6" MIN. CLEAR

8.– FOR WATER PIPE CROSSING OVER SS PIPE CROSSING PROVIDE 12" MIN. CLEAR

9.– FOR STORM DRAIN PIPE CROSSING OVER FIRE MAIN PIPE CROSSING, PROVIDE 12" MIN. CLEAR

10.– FOR STORM DRAIN PIPE CORSSING OVER POTABLE WATER PIPE CROSSING PROVIDE 12" MIN. CLEAR

11.– FOR FIRE WATER PIPE CROSSING OVER SS PIPE PROVIDE 12" MIN CLEAR.

12.– EXCAVATE AND REMOVE EXISTING SD PIPE, MANHOLES, INLETS, AND DRAIN FABRIC, PIPE BEDDING AND BACKFILL MATERIAL TO FULL WIDTH OF DRAIN PIPE TRENCH. BACKFILL EXCAVATION WITH ENGINEERED FILL PER GEOTECHNICAL REPORT. PLACE ENGINEERED FILL IN 8" LIFTS MAX AND COMPACT TO 90% TO WITHIN 8" OF FINISH GRADE. COMPACT TOP 8" OF ENGINEERED FILL TO 92%. DISPOSE OF ALL EXCAVATED MATERIAL AND DEBRI OFFSITE AT DISPOSAL FACILITY PERMITTED TO ACCEPT DEBRIS BY STATE OF CALIFORNIA.

1 13.– CONTRACTOR IS RESPONSIBLE FOR COORDINATING FIRE SERVICE UNDERGROUND INSTALLATION WITH THE VALLEJO FIRE DEPARTMENT. 707–648–4565.

2 14.– CONTRACTOR IS RESPONSIBLE FOR COORDINATING LANDSCAPE SUBDRAIN CONNECTIONS PRIOR TO ORDERING STORM DRAIN INLETS.

LEGEND

EXISTING		PROPOSED
EX.8"SSFM	SANITARY SEWER FORCE MAIN	8"SSFM
EX.15"SD	STORM DRAIN and MANHOLE	15" SD
EX.8"SS	STORM DRAIN CATCH BASIN	8" SS
	SANITARY SEWER and MANHOLE	
EX.8"W	SANITARY SEWER CLEAN OUT	8" W
EX.4"FW	WATER LINE	4" FW
	FIRE WATER	
	FIRE DEPARTMENT CONNECTION	
	REDUCED PRESSURE BACKFLOW DEVICE	
	CHECK VALVE	
	PIPE REDUCER	
	DOUBLE DECTECTOR CHECK VALVE	
	WATER VALVE	
	FIRE HYDRANT	
	WATER BLOW OFF	
	POST INDICATOR VALVE	
	AIR RELEASE VALVE	
WM	WATER METER	WM
EX.8"IRR	IRRIGATION LINE	
IRR	IRRIGATION CONTROL VALVE	
EX.4"G	GAS LINE	
GM	GAS VALVE	
	GAS METER	
EX.UGE	UNDERGROUND ELECTRIC LINE	
EX.OHE	OVERHEAD ELECTRIC LINE	
	UTILITY POLE	
T W E IR	UTILITY VAULT	
EX.UGT	UNDERGROUND TELECOMMUNICATIONS LINE	
EX.OHT	OVERHEAD TELECOMMUNICATIONS LINE	
	STREET LIGHTS	
	STORM DRAIN SUB-DRAIN	4" SBD

NO EXCEPTIONS NOTED
IMPLEMENT EXCEPTIONS NOTED
REVISE AND RESUBMIT
REJECTED

This conditional review is limited in scope and not detailed and is only for conformance with the design concept and general compliance with the information given in the Contract Documents. The Contractor is responsible for dimensions, quantities, verifying fabrication processes and construction techniques and coordinating all trades and safety precautions for the Work. The Architect's review does not relieve the Contractor of responsibility for errors or deviations from the Contract Documents not called to the Architect's attention in writing by the Contractor and specifically accepted by the Architect in writing or by the Architect's issuance of an Information Bulletin.

BY: KAPLAN McLAUGHLIN DIAZ DATE 12/8/2007

CELSOC
Consulting Rights-of-way and Land Surveyors of California

CONSTRUCTION CONTRACTOR AGREES THAT IN ACCORDANCE WITH THE GENERALLY ACCEPTED CONSTRUCTION PRACTICES, CONSTRUCTION CONTRACTOR WILL BE REQUIRED TO ASSUME THE SOLE AND COMPLETE RESPONSIBILITY FOR JOB SITE CONDITIONS DURING THE COURSE OF CONSTRUCTION OF THE PROJECT, INCLUDING SAFETY OF ALL PERSONS AND PROPERTY; THAT THIS REQUIREMENT SHALL BE MADE TO APPLY CONTINUOUSLY AND NOT BE LIMITED TO NORMAL WORKING HOURS, AND CONSTRUCTION CONTRACTOR FURTHER AGREES TO DEFEND, INDEMNIFY AND HOLD DESIGN PROFESSIONAL HARMLESS FROM ANY AND ALL LIABILITY, REAL OR ALLEGED, IN CONNECTION WITH THE PERFORMANCE OF WORK ON THIS PROJECT, EXCEPTING LIABILITY ARISING FROM THE SOLE NEGLIGENCE OF DESIGN PROFESSIONAL.

UNAUTHORIZED CHANGES AND USES: THE ENGINEER PREPARING THESE PLANS WILL NOT BE RESPONSIBLE FOR, OR LIABLE FOR, UNAUTHORIZED CHANGES TO OR USES OF THESE PLANS. ALL CHANGES TO THE PLANS MUST BE IN WRITING AND MUST BE APPROVED BY THE PREPARER OF THESE PLANS.

CALL BEFORE YOU DIG
(800)227–2600

CREGAN+D'ANGELO
Consulting Civil and Structural Engineers
2420 MARTIN ROAD, SUITE 280
FAIRFIELD, CALIFORNIA 94534–6810
TEL: (707)428–5300 FAX: (707)422–2086
FAIRFIELD • MONTEREY • PLEASANTON • SAN FRANCISCO • SAN JOSE, CALIFORNIA

APPROVAL STAMP
IDENTIFICATION STAMP
DIVISION OF THE STATE ARCHITECT
APPL 02– 107417
AC ____ FLS ____ SS ____
DATE: ____

NO.	ISSUED FOR	DATE
3		
2	ADDENDUM 2	02–21–06
1	ADDENDUM 1	02–03–06
	DSA APPROVAL SET	12–08–05

REGISTERED PROFESSIONAL ENGINEER — BRIAN R. D'ANGELO — No. 43034 — EXP. 9-30-08 — CIVIL — STATE OF CALIFORNIA

CERTIFIED BY

APPROVED
DIV. OF THE STATE ARCHITECT
SACRAMENTO REGIONAL OFFICE
AC ____ F/LS ____ SS 198
APP. # 107417 DATE 2-24-07

K M D
KAPLAN McLAUGHLIN DIAZ
ARCHITECTURE PLANNING
222 VALLEJO SAN FRANCISCO, CA 94111
(415) 398-5191 FAX (415) 394-7158

SOLANO COMMUNITY COLLEGE

SCCD
VALLEJO CENTER

PROJECT NO. 419–201
DATE 12–08–05

UTILITIES

C1.03

PLOT DATE:

RFI-009

NOTES:

1.– CONTRACTOR IS REPONSIBLE FOR COORDINATING FIRE AND POTABLE WATER CONNECTION WITH THE CITY OF VALLEJO, DEPARTMENT OF PUBLIC WORKS, (707) 648–4315.

2.– CONTRACTOR IS REPONSIBLE FOR COORDINATING SS AND SD CONNECTION WITH THE VALLEJO SANITATION AND FLOOD CONTROL DISTRICT(VSFCD), (707) 644–8949.

3.– CONNECT NEW 4" W LINE TO EX. 4" SERVICE CONNECTION. DEPTH OF EXISTING SERVICE UNKNOWN. CONTRACTOR TO VERIFY IN FIELD. REMOVE TEMPORARY PLUG. INSTALL CONCENTRIC REDUCER, TWO 3" GATE VALVES, AND CONCENTRIC INCREASER PER CITY STDS AND STD DETAILS 4–1, 4–05 AND 4–14. USE THRUST BLOCKS FOR W LINE PER CITY STDS AND STD DETAIL 4–06.

4.– CONNECT 10" FW TO EX. 12" FW SERVICES. REMOVE TEMPORARY 2" BLOWOFF ASSEMBLIES (INCLUDING REVERSE ANCHOR). INSTALL 12" TO 10" CONCENTRIC REDUCER AND TWO 10" GATE VALVES AT EACH LOCATION PER CITY STDS. AND CITY STD DETAILS 4–1, 4–05 AND 4–14. USE THRUST BLOCKS FOR FW PER CITY STDS AND STD DETAIL 4–06.

5.– INSTALL FIRE HYDRANTS PER CITY OF VALLEJO STD. DETAIL 4–05

6.– INSTALL SS CLEANOUTS PER DETAIL G/C1.04.

7.– FOR STORM DRAIN PIPE CROSSING OVER SS PIPE CROSSING, PROVIDE 6" MIN. CLEAR

8.– FOR WATER PIPE CROSSING OVER SS PIPE CROSSING PROVIDE 12" MIN. CLEAR

9.– FOR STORM DRAIN PIPE CROSSING OVER FIRE MAIN PIPE CROSSING, PROVIDE 12" MIN. CLEAR

10.– FOR STORM DRAIN PIPE CORSSING OVER POTABLE WATER PIPE CROSSING PROVIDE 12" MIN. CLEAR

11.– FOR FIRE WATER PIPE CROSSING OVER SS PIPE PROVIDE 12" MIN CLEAR.

12.– EXCAVATE AND REMOVE EXISTING SD PIPE, MANHOLES, INLETS, AND DRAIN FABRIC, PIPE BEDDING AND BACKFILL MATERIAL TO FULL WIDTH OF DRAIN PIPE TRENCH. BACKFILL EXCAVATION WITH ENGINEERED FILL PER GEOTECHNICAL REPORT. PLACE ENGINEERED FILL IN 8" LIFTS MAX AND COMPACT TO 90% TO WITHIN 8" OF FINISH GRADE. COMPACT TOP 8" OF ENGINEERED FILL TO 92%. DISPOSE OF ALL EXCAVATED MATERIAL AND DEBRI OFFSITE AT DISPOSAL FACILITY PERMITTED TO ACCEPT DEBRIS BY STATE OF CALIFORNIA.

1 13.– CONTRACTOR IS RESPONSIBLE FOR COORDINATING FIRE SERVICE UNDERGROUND INSTALLATION WITH THE VALLEJO FIRE DEPARTMENT. 707–648–4565.

2 14.– CONTRACTOR IS RESPONSIBLE FOR COORDINATING LANDSCAPE SUBDRAIN CONNECTIONS PRIOR TO ORDERING STORM DRAIN INLETS.

LEGEND

EXISTING		PROPOSED
EX 8"SSFM	SANITARY SEWER FORCE MAIN	8"SSFM
EX 15" SD	STORM DRAIN and MANHOLE	15" SD
	STORM DRAIN CATCH BASIN	
EX 8"SS	SANITARY SEWER and MANHOLE	8" SS
	SANITARY SEWER CLEAN OUT	
EX 8"W	WATER LINE	8" W
EX 4"FW	FIRE WATER	4" FW
	FIRE DEPARTMENT CONNECTION	
	REDUCED PRESSURE BACKFLOW DEVICE	
	CHECK VALVE	
	PIPE REDUCER	
	DOUBLE DECTECTOR CHECK VALVE	
	WATER VALVE	
	FIRE HYDRANT	
	WATER BLOW OFF	
	POST INDICATOR VALVE	
	AIR RELEASE VALVE	
WM	WATER METER	WM
EX 8"RW	IRRIGATION LINE	
IRR EX 2"IC	IRRIGATION CONTROL VALVE	
EX 2"GL	GAS LINE	
	GAS VALVE	
GM	GAS METER	
EX E/UGE	UNDERGROUND ELECTRIC LINE	
EX E/OHE	OVERHEAD ELECTRIC LINE	
	UTILITY POLE	
T W E FR	UTILITY VAULT	
EX U/GT	UNDERGROUND TELECOMMUNICATIONS LINE	
EX T/OHT	OVERHEAD TELECOMMUNICATIONS LINE	
	STREET LIGHTS	
	STORM DRAIN SUB-DRAIN	4" SBD

GRAPHIC SCALE
40 0 20 40 80 160
(IN FEET)
1 inch = 40 ft.

* SEE BACK FOR SIGN OFF RFI-023

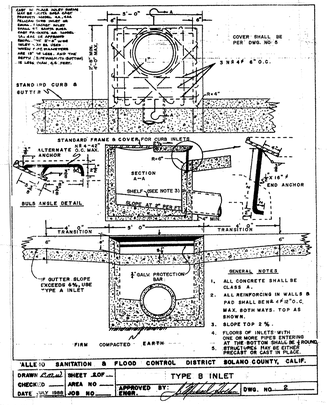

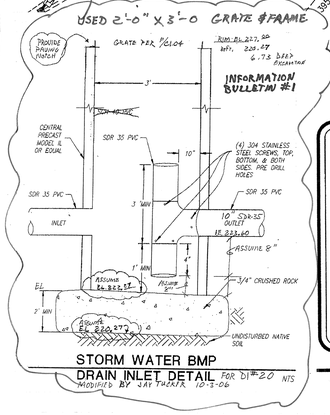

STORM WATER BMP
DRAIN INLET DETAIL For DI#20 NTS
MODIFIED BY JAY PAZOKI 10-3-06

CELSOC
Consulting Engineers and Land Surveyors of California

CONSTRUCTION CONTRACTOR AGREES THAT IN ACCORDANCE WITH THE GENERALLY ACCEPTED CONSTRUCTION PRACTICES, CONSTRUCTION CONTRACTOR WILL BE REQUIRED TO ASSUME THE SOLE AND COMPLETE RESPONSIBILITY FOR JOB SITE CONDITIONS DURING THE COURSE OF CONSTRUCTION OF THE PROJECT, INCLUDING SAFETY OF ALL PERSONS AND PROPERTY; THAT THIS REQUIREMENT SHALL BE MADE TO APPLY CONTINUOUSLY AND NOT BE LIMITED TO NORMAL WORKING HOURS, AND CONSTRUCTION CONTRACTOR FURTHER AGREES TO DEFEND, INDEMNIFY AND HOLD DESIGN PROFESSIONAL HARMLESS FROM ANY AND ALL LIABILITY, REAL OR ALLEGED, IN CONNECTION WITH THE PERFORMANCE OF WORK ON THIS PROJECT, EXCEPTING LIABILITY ARISING FROM THE SOLE NEGLIGENCE OF DESIGN PROFESSIONAL.

UNAUTHORIZED CHANGES AND USES: THE ENGINEER PREPARING THESE PLANS WILL NOT BE RESPONSIBLE FOR, OR LIABLE FOR, UNAUTHORIZED CHANGES TO OR USES OF THESE PLANS. ALL CHANGES TO THE PLANS MUST BE IN WRITING AND MUST BE APPROVED BY THE PREPARER OF THESE PLANS.

CREGAN+D'ANGELO
Consulting Civil and Structural Engineers
1420 MARTIN ROAD, SUITE 380
FAIRFIELD, CALIFORNIA 94534–6810
TEL: (707)429–5300 FAX: (707)429–2086
FAIRFIELD • MONTEREY • PLEASANTON • SAN FRANCISCO • SAN JOSE, CALIFORNIA

APPROVAL STAMP
IDENTIFICATION STAMP
DIVISION OF THE STATE ARCHITECT
APPL 02– 107417
AC ____ FLS ____ SS ____
DATE: ____

NO.	ISSUED FOR	DATE
1A		
1B		
1C		
1		
10		
9		
8		
7		
6		
5		
4		
3		
2	ADDENDUM 2	02–21–06
1	ADDENDUM 1	02–03–06
1	DSA APPROVAL SET	12–08–05

REGISTERED PROFESSIONAL ENGINEER KENNETH R. DIEZMANN No. 43034 EXP. 9-31-08 CIVIL STATE OF CALIFORNIA
CERTIFIED BY

K M D
KAPLAN McLAUGHLIN DIAZ
ARCHITECTURE PLANNING
222 VALLEJO SAN FRANCISCO, CA 94111
(415) 398–5191 FAX (415) 394–7158

AS BUILTS

SOLANO COMMUNITY COLLEGE

SCCD
VALLEJO CENTER

PROJECT NO. 419–201
DATE 12–08–05

UTILITIES

C1.03

PLOT DATE:

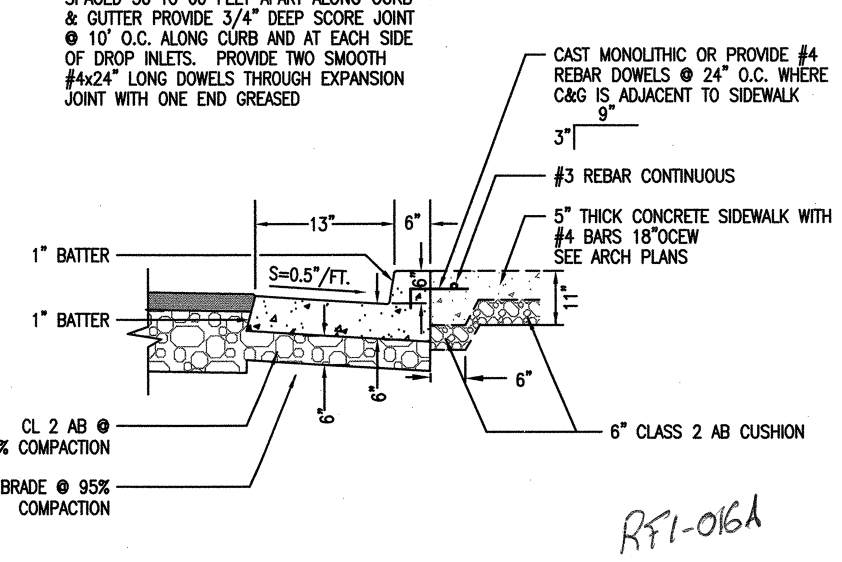

(A) CURB + GUTTER
NTS

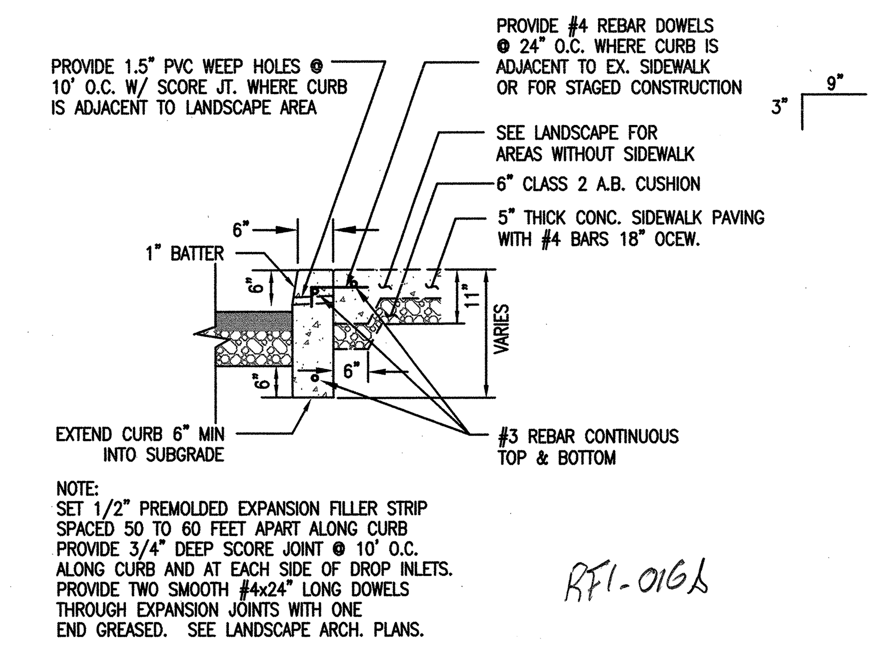

(B) VERTICAL CURB
NTS

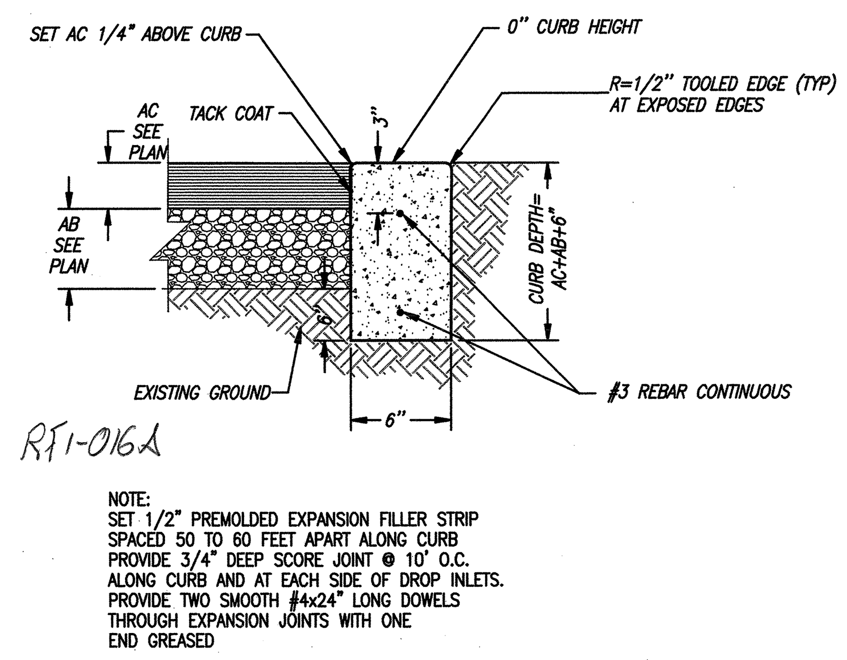

(C) CONCRETE CUTOFF WALL/HEADER FLUSH CURB
NTS

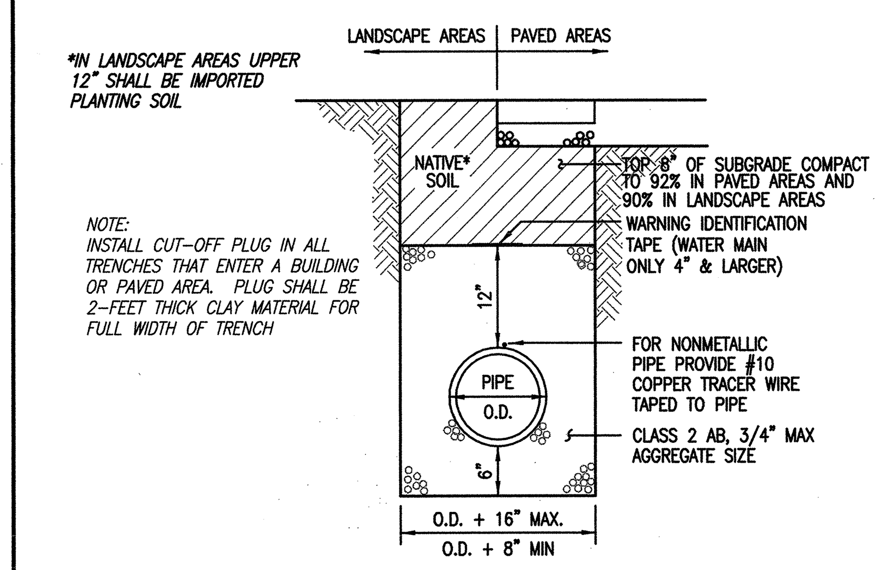

(D) TYPICAL TRENCH SECTION
(FOR ON-SITE TRENCHING ONLY) NTS

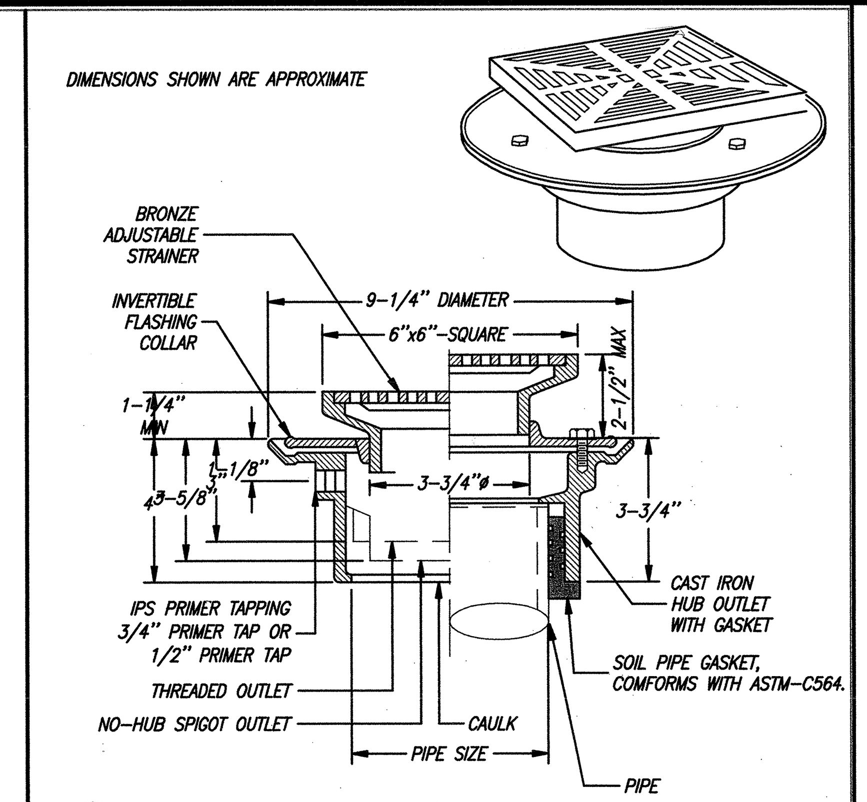

(E) AREA DRAIN
NTS

NOTE:

DETAILS SHOWN ON THIS SHEET ARE FOR ONSITE FACILITIES ONLY UNLESS NOTED OTHERWISE. SEE CITY AND VSFCD DESIGN STANDARDS, STANDARD SPECIFICATIONS AND DETAILS BOOK FOR DETAILS AND SPECIFICATIONS COVERING WORK IN THE CITY STREET RIGHT-OF-WAYS, UNLESS NOTED OTHERWISE.

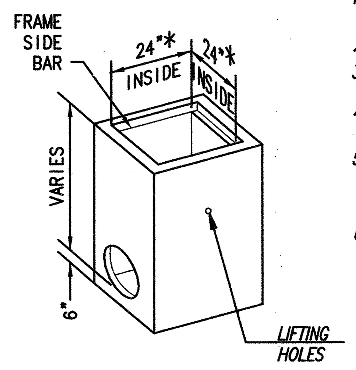

NOTES:
1. OPENINGS SHALL BE CAST AS REQUIRED TO MEET CONNECTING STORM DRAIN PIPING.
2. CONCRETE SHALL BE 3,000 PSI AT 28-DAY STRENGTH.
3. WALLS SHALL BER REINFORCED WITH 4"x4"-10/10 WELDED WIRE MESH.
4. WALLS SHALL BE 5" MIN THICK AND BASE SHALL BE 6" THICK.
5. GRATE SHALL BE SECURED TO FIELD INLET FRAME WITH TWO SETS OF 1/4" DIA LOCKING STAINLESS STEEL BOLT, LOOP & CLIP, OR OTHER APPROVED METHODS.
6. A. AT AC PAVEMENT AND AC WALKWAY LOCATIONS, FRAME AND GRATE SHALL BE ADA COMPLIANT, GALVANIZED AND TRAFFIC RATED. SEE DETAIL S/C1.04.
   B. AT CURB AND GUTTER OR LANDSCAPE/TURF LOCATIONS: FRAME AND GRATE SHALL BE BICYCLE PROOF AND HEAVY TRAFFIC RATED FOR H-20 LOADING AND HOT DIPPED GALVANIZED AFTER FABRICATION PER ASTM A-123 (SHOWN ON THIS DETAIL).

* 16"x16" DROP INLET SHALL BE USED FOR 10" AND SMALLER PIPE.
36"x36" DROP INLET SHALL BE USED FOR 18" AND LARGER PIPE ENTERING AT ANGLE.

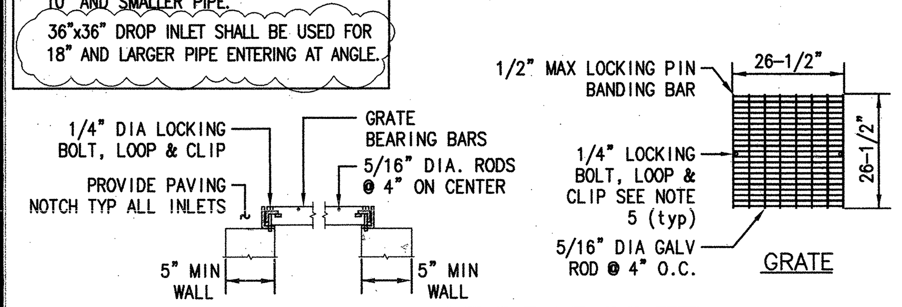

(F) PRE-CAST DROP INLET AND BUBBLE UP
NTS

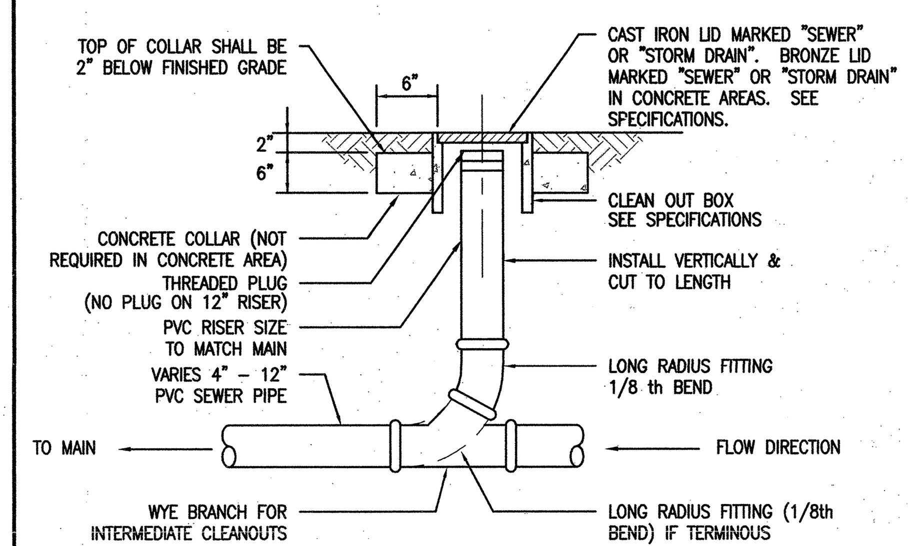

(G) CLEAN-OUT
NTS

NOTES:
1) MOISTURE CONDITIONED SHALL BE TO WITHIN TO +3 PERCENT OF OPTIMUM
2) ALL FILL SHALL BE PLACED IN 8-INCH MAXIMUM LOOSE LIFTS
3) PRIOR TO PLACEMENT OF AGGREGATE BASE, CONTRACTOR SHALL PROOF ROLL SUBGRADE PER GEOTECHNICAL REPORT.

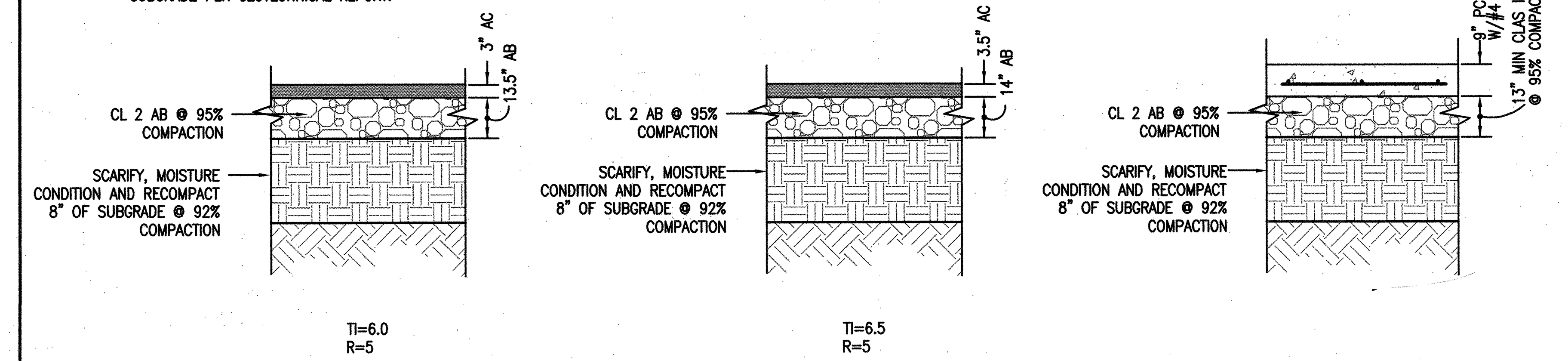

MEDIUM DUTY AC PAVEMENT
(FOR PARKING LOT STALLS & AISLEWAYS)

HEAVY DUTY AC PAVEMENT
(FOR SERVICE ROAD AISLE, MAIN ENTRY, & DROP-OFF)

PCC PAVEMENT
(FOR COLLEGE ENTRY, PLANTER ISLAND)

RFI-016A

(H) TYPICAL PAVEMENT SECTIONS
NTS

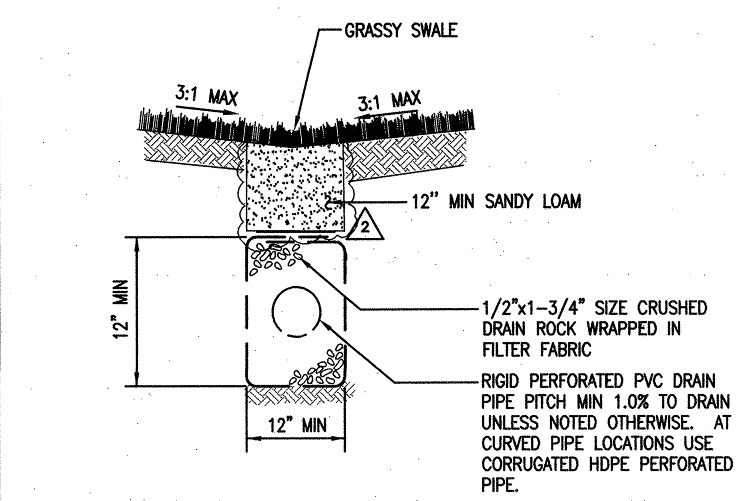

(I) PERFORATED DRAIN
NTS

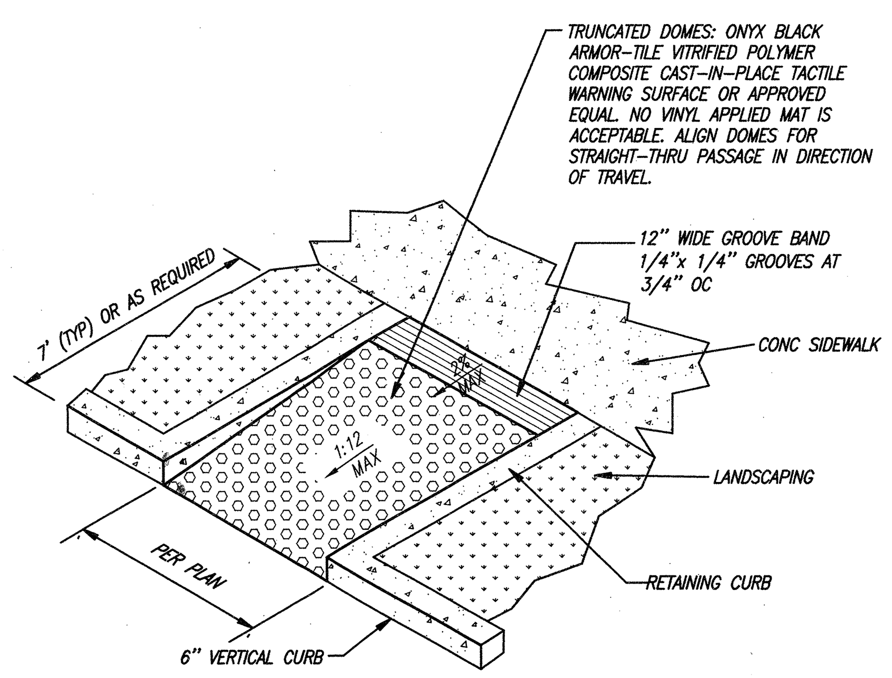

(J) ACCESSIBLE CURB RAMP WITH SEPARATED SIDEWALK
NTS

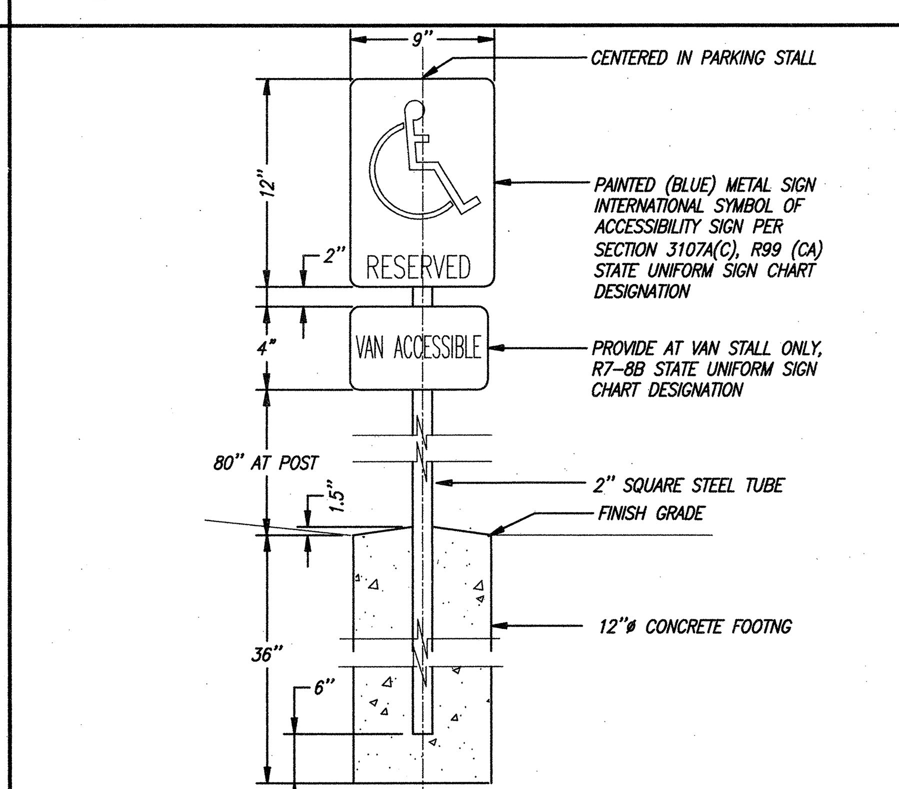

(K) ACCESSIBLE PARKING SIGN
NTS

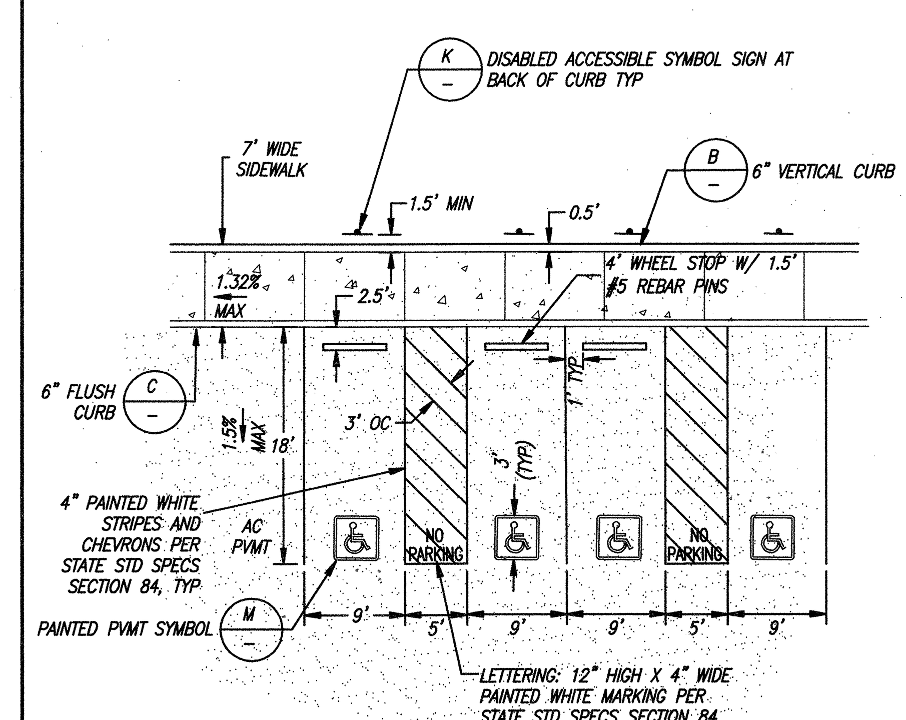

(L) GROUPED ACCESSIBLE PARKING STALLS
NTS

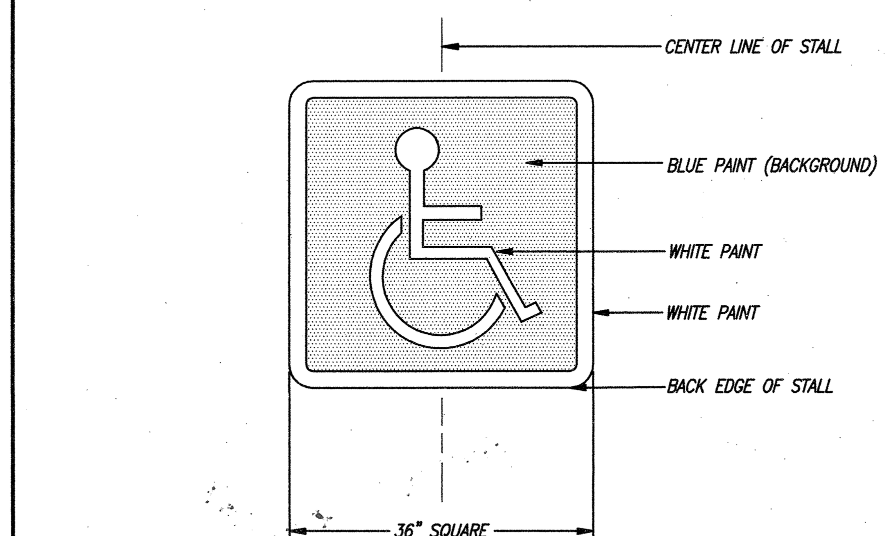

NOTE:
SEE STATE STD SPECS SECTION 84 FOR PAINT TYPE

(M) ACCESSIBLE PAVEMENT SYMBOL
NTS

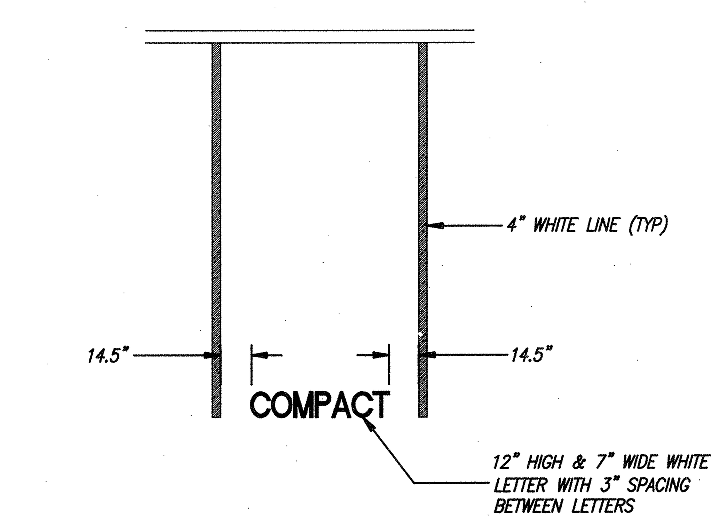

(N) COMPACT STALL MARKING
NTS

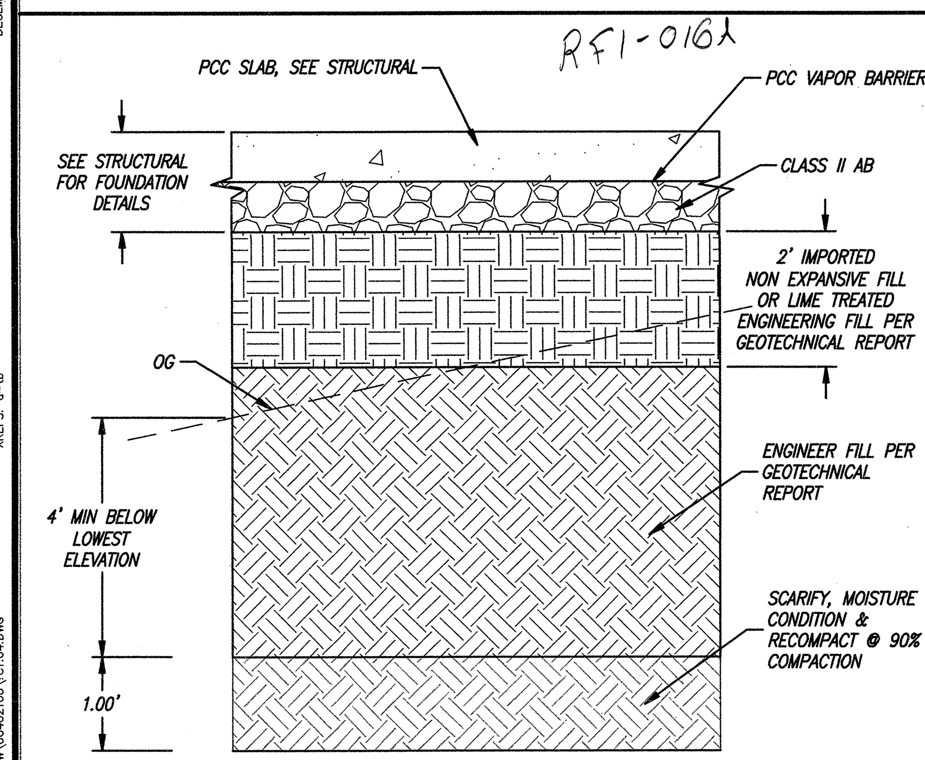

(O) BUILDING SUBGRADE DETAIL
NTS

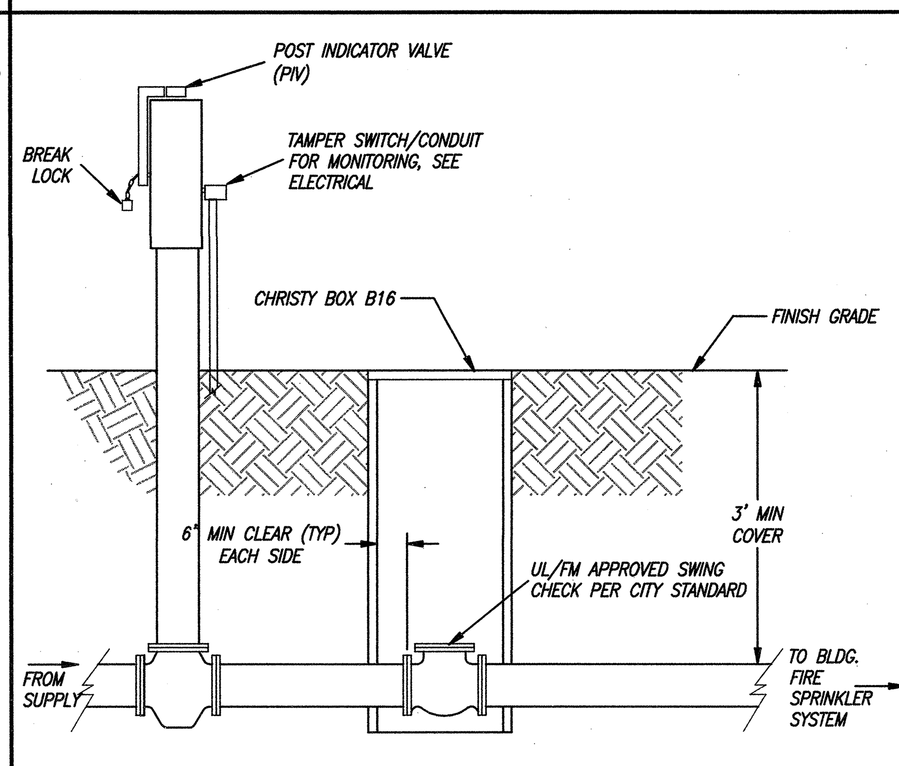

(P) POST INDICATOR VALVE
NTS

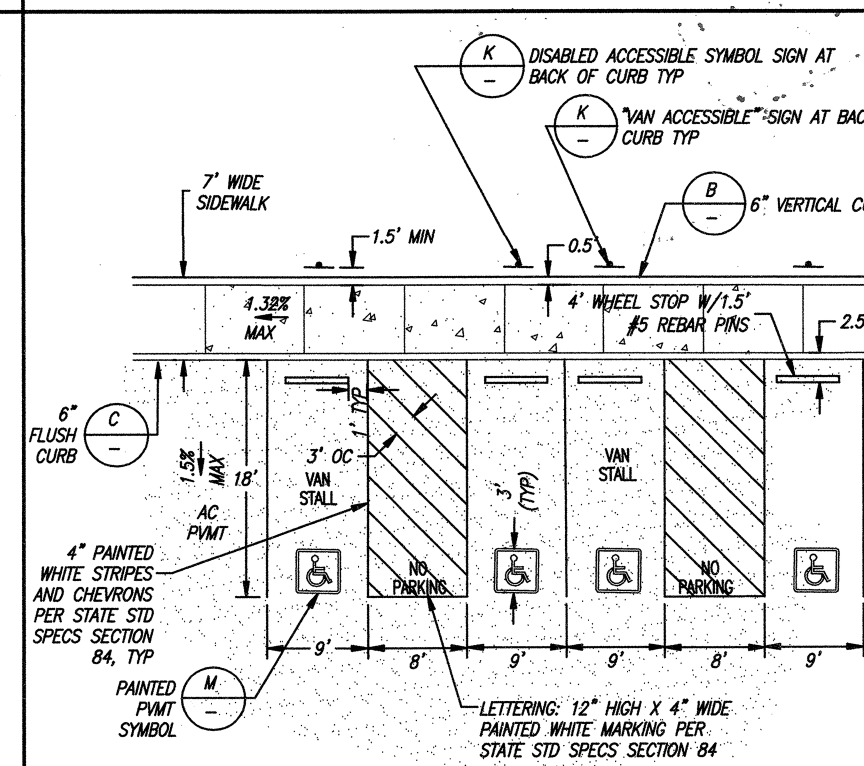

(Q) GROUPED ACCESSIBLE VAN PARKING STALLS
NTS

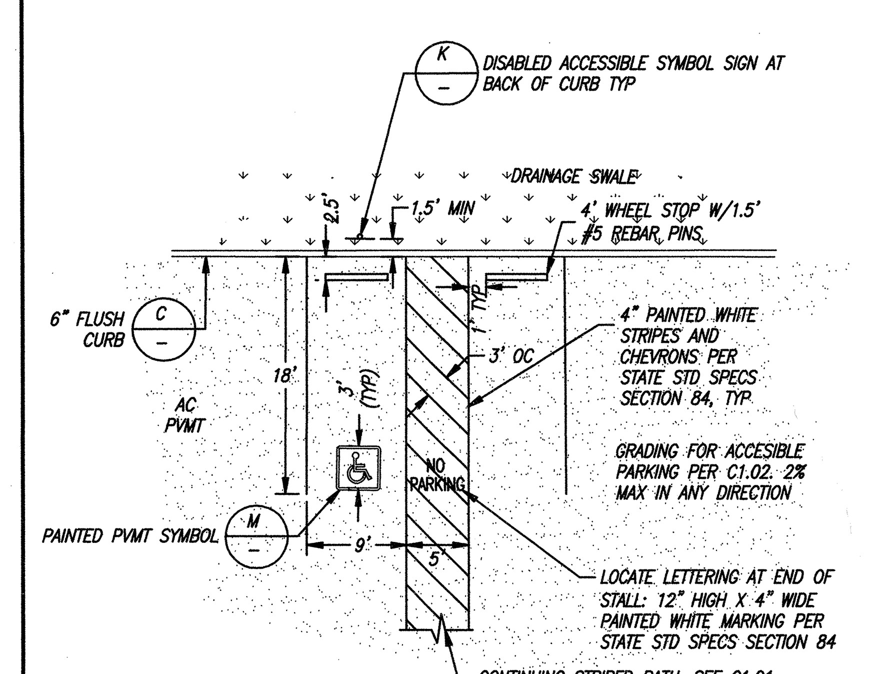

(R) ACCESSIBLE PARKING WITH PATH OF TRAVEL
NTS

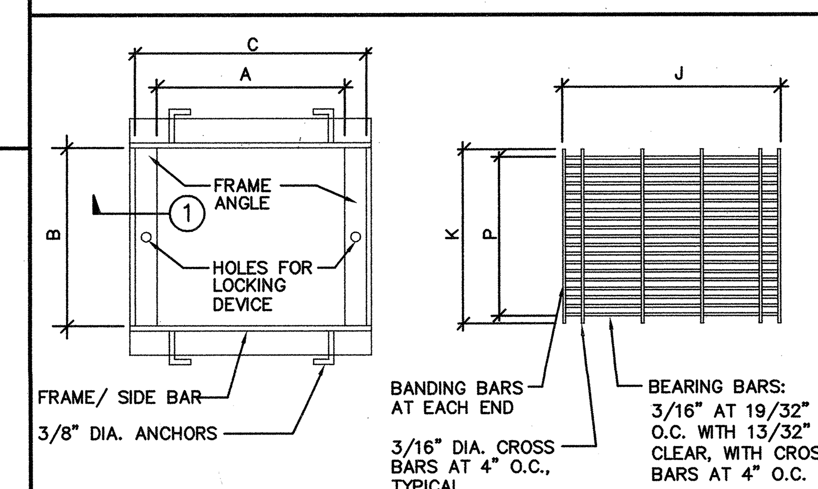

FRAME PLAN — GRATE PLAN

		FRAMES					GRATE					
		A	B	C	BEARING ANGLE	SIDE BAR	J	K	P	BEARING BARS	BAND BAR	#
		IN	IN	IN	IN	IN	IN	IN	IN	IN	IN	BARS
12x12	S / H	12-3/8	12-3/8	15	1-1/2X1-1/2	1-1/2x1/4	14-3/4	12-1/8	12-1/16	1-1/4X3/16	1x3/16	21
18x18	S / H	18-3/8	18-3/8	21	1-1/2X1-1/2 / 2X1-1/2	1-1/2x1/4 / 2x1/4	20-5/8	18-1/8	18	1-1/4x3/16 / 1-3/4x3/16	1x3/16 / 1-1/2x3/16	31
18x24	S / H	18-3/8	24-3/8	21	1-1/2X1-1/2 / 2X1-1/2	1-1/2x1/4 / 2x1/4	20-5/8	18-1/8	18	1-1/4x3/16 / 1-3/4x3/16	1x3/16 / 1-1/2x3/16	31
24x24	S / H	24-3/8	24-3/8	27	1-1/2X1-1/2 / 2-1/2X1-1/2	1-1/2x1/4 / 2-1/2x1/4	26-3/4	24-1/8	23-15/16	1-1/4x3/16 / 2-1/4x3/16	1x3/16 / 2x3/16	41

S = SIDEWALK LOADS (300PSF)
H = HEAVY TRAFFIC LOADS (H20)

FRAME AND GRATES ARE HOT-DIPPED GALVANIZED AFTER FABRICATION PER ASTM SPEC. A-123. REFER TO MANUFACTURER FOR LOCKING DEVICE DETAIL

(S) DROP INLET ADA GRATE
NTS

C+D Consulting Civil and Structural Engineers
CREEGAN+D'ANGELO
2420 MARTIN ROAD, SUITE 380
FAIRFIELD, CALIFORNIA 94534-8610
TEL: (707)429-5300 FAX: (707)429-2086
FAIRFIELD • MONTEREY • PLEASANTON • SAN FRANCISCO • SAN JOSE, CALIFORNIA

APPROVAL STAMP
IDENTIFICATION STAMP
DIVISION OF THE STATE ARCHITECT
APPL 02- 107417
AC ______ FLS ______ SS ______
DATE: ______

NO.	ISSUED FOR	DATE
14		
13		
12		
11		
10		
9		
8		
7		
6		
5		
4		
3		
2	ADDENDUM 2	02-21-06
1	ADDENDUM 1	02-03-06
1	DSA APPROVAL SET	12-08-05

REGISTERED PROFESSIONAL ENGINEER KENNETH R. SWENSON No. 43034 EXP. 3-31-06 CIVIL STATE OF CALIFORNIA
CERTIFIED BY

K M D
KAPLAN McLAUGHLIN DIAZ
ARCHITECTURE PLANNING
222 VALLEJO SAN FRANCISCO, CA 94111
(415) 398-5191 FAX (415) 394-7158

AS BUILTS

SOLANO COMMUNITY COLLEGE

SCCD
VALLEJO CENTER

PROJECT NO. 419-201
DATE 12-08-05

DETAILS

C1.04

DRAWING: P:\DRAW\60402100\C1.04.DWG XREFS: a-tb DECEMBER 15, 2005 12:43:08 p.m.

PLOT DATE:

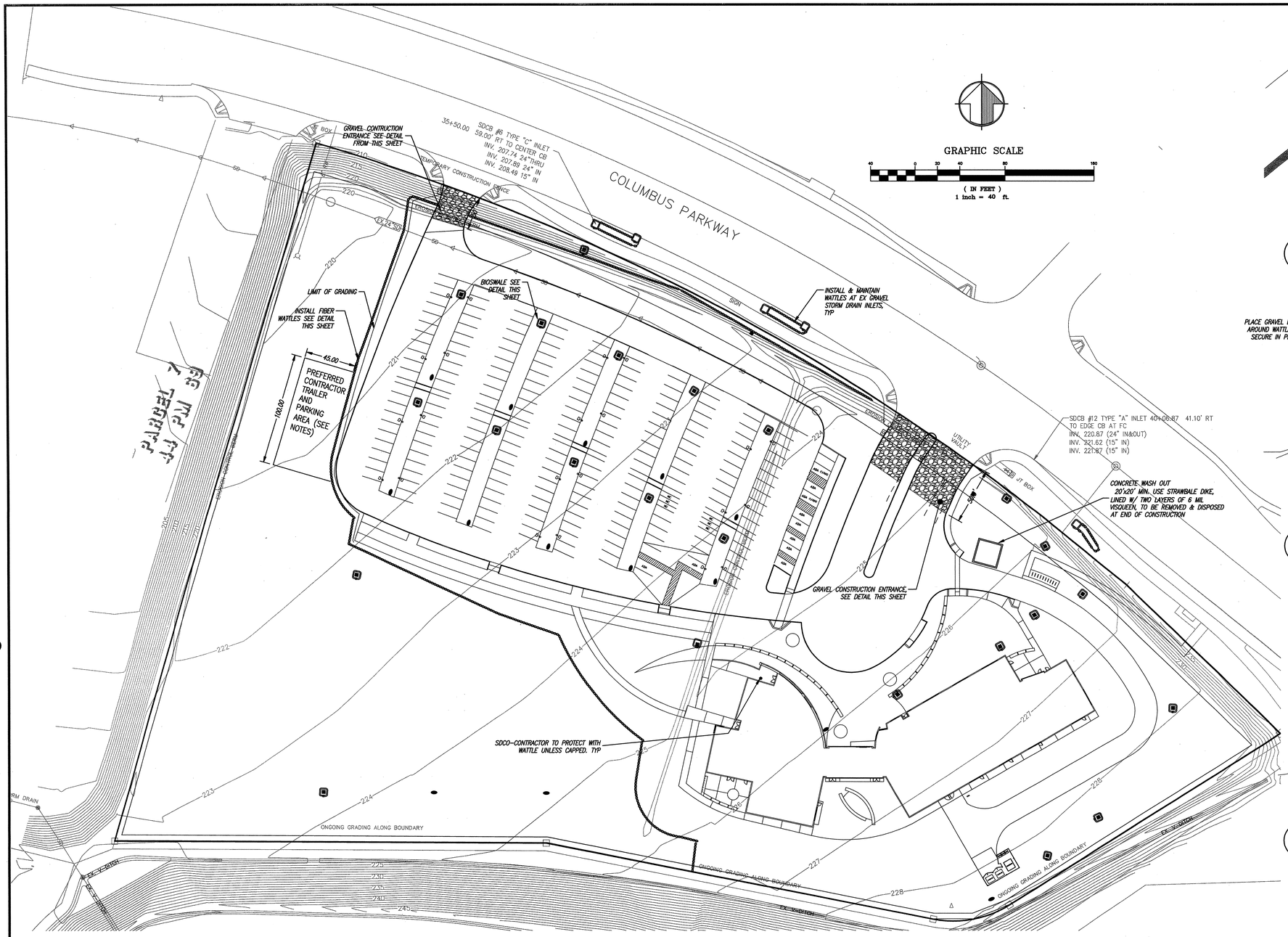

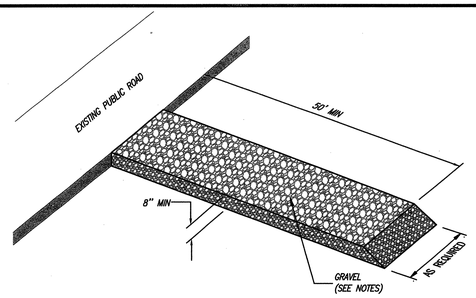

1 GRAVEL CONSTRUCTION ENTRANCE

NTS

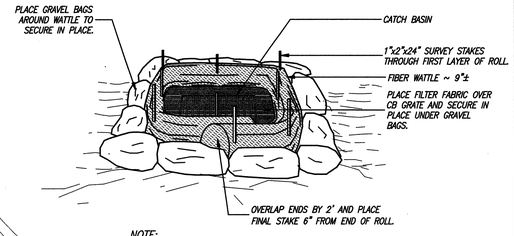

NOTE:
USE ROCK FILLED BURLAP BAGS INSTEAD OF STRAW WATTLE TO PROTECT INLET AFTER PAVING IS COMPLETED.

2 WATTLE CATCH BASIN SEDIMENT BARRIER

NTS

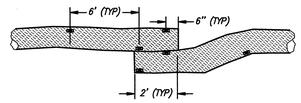

OVERLAP ENDS BY 2' AND PLACE FINAL STAKE 6" FROM END OF ROLL.

STAKING DETAIL

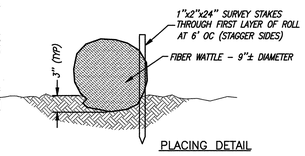

PLACING DETAIL

3 FIBER WATTLE

NTS

EROSION CONTROL NOTES:

24 Hr. Emergency Contact: _____ cell: _____

1. A CONSTRUCTION ENTRANCE SHALL BE INSTALLED PRIOR TO COMMENCEMENT OF GRADING. LOCATION OF THE ENTRANCE MAY BE ADJUSTED BY THE CONTRACTOR TO FACILITATE GRADING OPERATIONS. ALL CONSTRUCTION TRAFFIC ENTERING THE PAVED ROAD MUST CROSS THE CONSTRUCTION ENTRANCE.
2. THE EROSION AND SEDIMENT CONTROL MEASURES SHALL BE OPERABLE DURING THE RAINY SEASON AND BMPs AND ECS SHALL BE COMPLETED BY OCTOBER 15th OR BEFORE AN NWS PREDICTION 40% CHANCE OF RAIN. NO GRADING SHALL OCCUR BETWEEN OCTOBER 15th AND APRIL 15th WITHOUT WRITTEN APPROVAL FROM THE CITY ENGINEER. NOTE THAT ALL BMPs ARE TO BE ENFORCED NOT ONLY DURING WET WEATHER SEASONS, BUT ALSO ALL YEAR ROUND.
3. CHANGES TO THIS EROSION AND SEDIMENT CONTROL PLAN TO MEET FIELD CONDITIONS SHALL BE MADE ONLY BY AN AUTHORIZED AGENT OF THE PARTY RESPONSIBLE FOR IMPLEMENTATION OF THE SWPPP, AND SUBMITTED TO THE VALLEJO SANITATION AND FLOOD CONTOL DISTRICT WITHIN 5 DAYS.
4. PUBLIC ROADWAY SHALL BE KEPT CLEAR OF EARTH MATERIAL AND DEBRIS AT ALL TIMES. SHOULD DIRT BE CARRIED ON TO THE PUBLIC ROADWAY, DAILY SWEEPING WILL BE NECESSARY. THE SITE SHALL BE MAINTAINED SO THAT A MINIMUM OF SEDIMENT LADEN RUNOFF ENTERS THE STORM DRAINAGE SYSTEM AND PUBLIC ROADWAY. THIS PLAN COVERS ONLY THE FIRST WINTER FOLLOWING GRADING. PLANS SHALL BE RESUBMITTED FOR APPROVAL PRIOR TO SEPTEMBER 1st OF EACH SUBSEQUENT YEAR UNTIL THE PROPOSED IMPROVEMENTS ARE COMPLETED.
5. WITH THE EXCEPTION OF PROPERLY DESILTED WATER FROM SITE DEWATERING, THE CONTRACTOR SHALL NOT DISCHARGE ANY MATERIALS AND/OR LIQUIDS TO THE STORM DRAINAGE SYSTEM. ACTIVITIES OF PARTICULAR CONCERN ARE:
   - A. CONTRACTOR SHALL DESIGNATE A CONCRETE TOOL & TRUCK CLEAN-OUT AREA. CITY INSPECTOR APPROVED BEST MANAGEMENT PRACTICES SHALL AT ALL TIMES BE FULLY IMPLEMENTED AT AND AROUND THE CLEAN-OUT AREA.
   - B. TACK COAT AND PRIME COAT ASPHALTS SHALL BE CAREFULLY SPRAYED AND ANY EXCESS MATERIAL SPILLED SHALL BE CLEANED UP IMMEDIATELY BY PROPER METHODS.
   - C. ALL EQUIPMENT REFUELING IN THE PROJECT AREA SHALL BE CAREFULLY DONE TO AVOID SPILLAGE. ANY SPILLS SHALL BE CONTAINED AND CLEANED UP IMMEDIATELY IN ACCORDANCE WITH STATE AND LOCAL REQUIREMENTS. ALL FUELING VEHICLES SHALL BE EQUIPPED WITH SPILL CLEANUP MATERIALS AND EQUIPMENT.
   - D. CONTRACTOR SHALL CONTROL AND PROPERLY DISPOSE OF ALL LIQUIDS CREATED DURING SAWCUTTING ACTIVITIES.

LANDSCAPING:

1. FINISHED SLOPES AND AREAS DISTURBED BY GRADING SHALL BE LANDSCAPED PER LANDSCAPE PLANS.

MAINTENANCE NOTES:

1. DURING CONSTRUCTION, ALL EROSION AND SEDIMENT CONTROL MEASURES SHALL BE INSPECTED AND REPAIRED AT THE END OF EACH WORKING DAY AND, IN ADDITION, BEFORE, DURING (EVERY 24 HOURS MIN.) AND AFTER EACH STORM.

TEMPORARY STABILIZED CONSTRUCTION ENTRANCE:

1. THE MATERIAL FOR CONSTRUCTION OF THE PAD SHALL BE 1 1/2" MIN. ANGULAR ROCK.
2. THE THICKNESS OF THE PAD SHALL NOT BE LESS THAN 8 INCHES.
3. THE WIDTH OF THE PAD SHALL NOT BE LESS THAN THE FULL WIDTH OF ALL POINTS OF INGRESS AND EGRESS.
4. THE LENGTH OF THE PAD SHALL BE AS REQUIRED, BUT NOT LESS THAN 50 FEET.
5. THE ENTRANCE SHALL BE MAINTAINED IN A CONDITION THAT WILL PREVENT TRACKING OR FLOWING OF SEDIMENT ONTO PUBLIC RIGHTS-OF-WAY. THIS MAY REQUIRE PERIODIC TOP DRESSING WITH ADDITIONAL STONE AS CONDITIONS DEMAND, AND REPAIR AND/OR CLEANOUT OF ANY MEASURES USED TO TRAP SEDIMENT. ALL SEDIMENT SPILLED, DROPPED, WASHED, OR TRACKED ONTO PUBLIC RIGHTS-OF-WAY WILL BE REMOVED IMMEDIATELY.
6. WHEN NECESSARY, WHEELS SHALL BE CLEANED TO REMOVE SEDIMENT PRIOR TO ENTRANCE ONTO PUBLIC RIGHTS-OF-WAY.

TEMPORARY WATTLE AROUND INLETS:

1. WATTLE SPLICE SHALL BE OVERLAPPED MIN 2' AS SHOWN.
2. WATTLE SHALL BE EMBEDDED IN THE SOIL BETWEEN 3 AND 5 INCHES IF IT IS INSTALLED OVER SOIL.
3. WATTLE SHALL BE SECURELY ANCHORED IN PLACE BY STAKES
4. THE DIKE SHALL BE INSPECTED AFTER EACH STORM AND REPAIRED OR REPLACEMENT SHALL BE MADE PROMPTLY, AS NEEDED.
5. WATTLE SHALL BE REMOVED WHEN IT HAS SERVED ITS PURPOSE SO AS NOT TO BLOCK OR IMPEDE STORM FLOW OR DRAINAGE
6. IF A STORM EVENT IS FOREGAST AFTER CATCH BASINS ARE INSTALLED BUT BEFORE PAVING CAN BE COMPLETED AROUND INLET, 2" DIAMETER HOLES SHALL BE DRILLED INTO SIDE OF CATCH BASIN 4" ABOVE GRADE ON ALL SIDES. REMOVE SEDIMENT AFTER EACH EVENT.

PERMANENT PROTECTION AROUND FIELD INLETS:

PROVIDE A MINIMUM OF 3 FEET OF GRASS ADJACENT TO AND COMPLETELY AROUND ALL FIELD INLETS. GRASS BUFFER SHALL BE INSTALLED ONCE TEMPORARY MEASURES ARE NO LONGER REQUIRED.

POST BMPs:

INSTALL DISTRICT APPROVED THERMAL PLASTIC MARKERS AT ALL STORM DRAIN INLETS. LOCATION AND MARKER TYPE SHALL BE APPROVED BY DISTRICT. SPECIFIC PLACEMENT OF MARKERS SHALL BE AS DIRECTED BY THE CITY INSPECTOR.

EROSION CONTROL LEGEND

FIBER WATTLE

CATCH BASIN WATTLE

CALL BEFORE YOU DIG
UNDERGROUND SERVICE ALERT
(800)227-2600

CELSOC
Consulting Engineers and Land Surveyors of California

CONSTRUCTION CONTRACTOR AGREES THAT IN ACCORDANCE WITH THE GENERALLY ACCEPTED CONSTRUCTION PRACTICES, CONSTRUCTION CONTRACTOR WILL BE REQUIRED TO ASSUME THE SOLE AND COMPLETE RESPONSIBILITY FOR JOB SITE CONDITIONS DURING THE COURSE OF CONSTRUCTION OF THE PROJECT, INCLUDING SAFETY OF ALL PERSONS AND PROPERTY; THAT THIS REQUIREMENT SHALL BE MADE TO APPLY CONTINUOUSLY AND NOT BE LIMITED TO NORMAL WORKING HOURS, AND CONSTRUCTION CONTRACTOR FURTHER AGREES TO DEFEND, INDEMNIFY AND HOLD DESIGN PROFESSIONAL HARMLESS FROM ANY AND ALL LIABILITY, REAL OR ALLEGED, IN CONNECTION WITH THE PERFORMANCE OF WORK ON THIS PROJECT, EXCEPTING LIABILITY ARISING FROM THE SOLE NEGLIGENCE OF DESIGN PROFESSIONAL.

UNAUTHORIZED CHANGES AND USES: THE ENGINEER PREPARING THESE PLANS WILL NOT BE RESPONSIBLE FOR, OR LIABLE FOR, UNAUTHORIZED CHANGES TO OR USES OF THESE PLANS. ALL CHANGES TO THE PLANS MUST BE IN WRITING AND MUST BE APPROVED BY THE PREPARER OF THESE PLANS.

STORM WATER POLLUTION PREVENTION PLAN:

THE CONTRACTOR SHALL PREPARE AND SUBMIT A NOTICE OF INTENT (NOI) AND A STORM WATER POLLUTION PREVENTION PLAN (SWPPP) WITH APPROVED FEES TO THE STATE WATER RESOURCES CONTROL BOARD AND THE VALLEJO SANITATION AND FLOOD CONTROL DISTRICT , 450 RYDER STREET, VALLEJO, CA 94590, GUS SILVA, (707) 644-8949. NO PROJECT WORK SHALL BE INITIATED UNTIL THE NOI HAS BEEN SUBMITTED TO THE REGIONAL WATER QUALITY CONTROL BOARD AND THE SWPPP HAS BEEN APPROVED BY THE VALLEJO SANITATION AND FLOOD CONTROL DISTRICT.

CREEGAN+D'ANGELO
Consulting Civil and Structural Engineers
2420 MARTIN ROAD, SUITE 380
FAIRFIELD, CALIFORNIA 94534-8610
TEL: (707)429-5300 FAX: (707)429-2086
FAIRFIELD • MONTEREY • PLEASANTON • SAN FRANCISCO • SAN JOSE, CALIFORNIA

APPROVAL STAMP

IDENTIFICATION STAMP
DIVISION OF THE STATE ARCHITECT
APP# 02- 107417
AC MM FLS FH SS AL
DATE: 12/21/05

NO.	ISSUED FOR	DATE
1	DSA APPROVAL SET	12-08-05

REGISTERED PROFESSIONAL ENGINEER
KENNETH R. SIMONSEN
No. 49094
Exp. 3-31-06
CIVIL
STATE OF CALIFORNIA

CERTIFIED BY

K M D
KAPLAN McLAUGHLIN DIAZ
ARCHITECTURE PLANNING
222 VALLEJO SAN FRANCISCO, CA 94111
(415) 398-5191 FAX (415) 394-7158

AS BUILTS

SOLANO COMMUNITY COLLEGE

SCCD
VALLEJO CENTER

PROJECT NO.	DATE
419-201	12-08-05

EROSION CONTROL

C1.05

PLOT DATE:

DECEMBER 07, 2005 2:43:45 p.m.

K:\ENTS ALSO\419-TOPO-TRIMMED 03-21-05 X-TOPO MASTER Master Xref 05-19-05

DRAWING P:\JOB\419\04\05\01\C1.05.DWG

GENERAL NOTES

DESIGN

1. DESIGN & DETAILS OF CONSTRUCTION SHALL COMPLY WITH THE 2001 EDITION OF THE CALIFORNIA BUILDING CODE "C" SECTIONS & AMENDMENTS OF 2001.

LOADS

1. DESIGN LOADINGS SHOWN OR NOTED THE ANY LIVE LOADS FOR SIGNS ARE AS FOLLOWS:
   WIND SPEED, V = 85
   TRIB AT = 64 SQ.FEET/SIGN FLANGE

STRUCTURAL STEEL

1. FABRICATION & ERECTION OF STRUCTURAL STEEL SHALL CONFORM TO THE LATEST EDITION OF THE SPECIFICATIONS FOR THE DESIGN, FABRICATION & ERECTION OF STEEL CONSTRUCTION.
2. WELDING SHALL COMPLY WITH THE LATEST STEEL CONSTRUCTION MANUAL OF THE AMERICAN INSTITUTE OF STEEL CONSTRUCTION (ASD) AND THE AMERICAN WELDING SOCIETY. USE E70 XX FOR WELDING RODS, T THE AMERICAN INSTITUTE OF STEEL CONSTRUCTION SPECIFICATIONS)
   ROLLED SHAPES, PIPE COLUMNS & PLATES
   ASTM A36 Fy = 36 KSI
   ROLLED SHAPES, PIPE COLUMNS & PLATES (OPTIONAL)
   ASTM A36 Fy = 36 KSI
3. ALL STRUCTURAL STEEL EXPOSED ABOVE FINISHED GRADE SHALL BE PAINTED WITH TWO COATS OF PAINT OVER ONE COAT OF RED PRIMER PAINT. PAINTING SHALL CONFORM TO PAINTING SPECIFICATIONS.

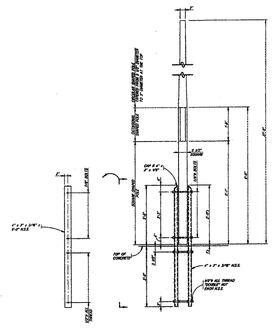

A1

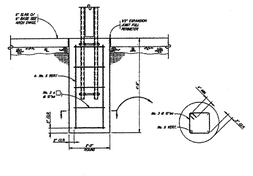

B1

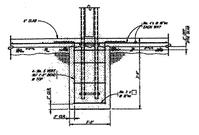

C1

THE STRUCTURAL DESIGN OF FLAG POLE AND FOOTING PREPARED BY OTHERS, HAS BEEN REVIEWED AND FOUND TO BE IN GENERAL CONFORMANCE WITH THE STRUCTURAL DESIGN REQUIREMENTS OF THE BUILDING. THE REVIEW HAS BEEN LIMITED TO STRUCTURAL COMPLIANCE WITH BUILDING CODE REQUIREMENTS RELATED TO STRUCTURAL ASPECTS OF STRUCTURAL ELEMENTS. NONSTRUCTURAL FEATURES SUCH AS ARCHITECTURAL, MECHANICAL, ELECTRICAL, CIVIL, ACOUSTICAL, WATERPROOFING, AND/OR OTHER DISCIPLINES ARE NOT PART OF THE STRUCTURAL REVIEW. THIS REVIEW IS CONTINGENT ON ACCEPTANCE OF THESE DRAWINGS BY THE ARCHITECT, GENERAL CONTRACTOR AND THE DIVISION OF THE STATE ARCHITECT.

DASSE DESIGN, Inc.
STRUCTURAL ENGINEER

6/30/07
DATE

REVISIONS	DATE

the Phillips Group
1330 Broadway
Sixth Floor Lobby
Suite 3
Oakland, CA. 94607
510/301-3211

SOLANO COMMUNITY COLLEGE
VALLEJO, CALIFORNIA

DRAWN	
CHECKED	
DATE	
SCALE	
JOB NO.	
SHEET	1
OF	SHEETS

Copy sent by e-mail to: Long Electric. 8-9-06

Ralph Larsen & Son, Inc.
General Contractors License No. 183341
300 8th Avenue
San Mateo, CA 94401-4221
Phone (650) 579-0339
Fax (650) 579-0349

Request for Information 059

Detailed, RFIs Grouped by RFI Number

Vallejo Center for Solano Comm. Coll. Dist.
Northgate Business Park
545 Columbus Parkway
Vallejo, CA 94591

Project # 2604
Tel: (707) 649-8327 Fax: (707) 553-9728

Ralph Larsen & Son, Inc.

REC'D 7/25/06

RFI #: 059

Date Created: ~~7/20/2006~~

Answer Company	Answered By	Author Company	Authored By
		Long Electric Company 870 D Napa Valley Corporate Way Napa, CA 94558	Scott Baldocchi

Co-Respondent — Author RFI Number

Subject: Lighting control issues. — Discipline — Category

Cc: Company Name — Contact Name — Copies — Notes

Question — Date Required: 8/1/2006

Review attached RFI-006 from Long Electric and provide answers and clarification.
1) Please provide Lighting control intent for panels LCP-1 AND LCP - HB. Please advise what area(s) and fixtures are to be controlled via lighting control panels. Are we to refer to the Lighting compliance summaries on E0.01 & E0.02?
2) If so, are we to assume that if an area has no occupancy sensors, it's to be run through the LCP's?
3) Also, per sheet E0.02 in the Lighting compliance summary it states the Lecture Hall is to have occupancy sensors, but none are shown. What is the intent for this space to meet Title 24?

Suggestion

Answer — Date Answered:

1) Lighting control panels are to control all lighting not controlled via occupancy sensor. Refer to attached ESK-15 and ESK-16 for lighting control block diagram and schedules. Refer to ESK-17 thru ESK-22 for locations of low voltage override switches and additional occupancy sensor locations. 1

2) Yes, areas without occupancy sensors are to be wired through the LCP's.

3) The Lecture Hall is to be controlled via LCP-HB. Refer to attached sketches.

Valeria Balderramos
Alfa Tech Cambridge
08/08/06

Prolog Manager — Printed on: 7/20/2006 — RALPH — Page 1

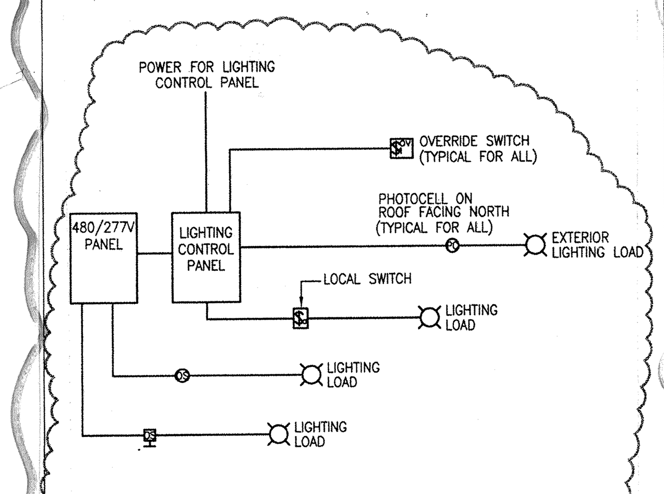

1 LIGHTING CONTROL BLOCK DIAGRAM (TYP)
NO SCALE

SCALE NONE

K M D — KAPLAN McLAUGHLIN DIAZ — ARCHITECTURE PLANNING — 222 VALLEJO SAN FRANCISCO, CA 94111 — (415) 398-5191 FAX (415) 394-7158

SCCD
VALLEJO CENTER
CONTRACT # A003.6123.01.V1

SKETCH NUMBER	DRAWING REFERENCE
ESK-15	E0.01
TITLE: RFI #59	DATE: 08/08/06

LIGHTING CONTROL PANEL SCHEDULE: LCP-1

RELAY	CIRCUIT	SWITCH	COMMENTS
1	H1-9	OV #3	HALLWAY A-120, STUDY AREA A-130 HALLWAY A-110, VENDING A-101
2	H1-10	OV #4	LOBBY A-200, CORRIDOR A-210, HALLWAY A-225, ALCOVE
ALL OTHER RELAYS ARE SPARE, (8) RELAYS MINIMUM			

LIGHTING CONTROL PANEL SCHEDULE: LCP-HB

RELAY	CIRCUIT	SWITCH	COMMENTS
1	HB-3,5	OV #1	GYMNASIUM ONLY
2	HB-7,9,1	OV #2	LECTURE HALL, ART ROOM, GALLERY, LOBBY A-100
3	HB-11	–	SITE LIGHTING VIA PHOTOCELL
4	HB-13	–	SITE LIGHTING VIA PHOTOCELL
5	HB-15	–	SITE LIGHTING VIA PHOTOCELL
6	HB-17,19	–	EXTERIOR BUILDING MOUNTED AND LANDSCAPE LIGHTING VIA PHOTOCELL
ALL OTHER RELAYS ARE SPARE, (8) RELAYS MINIMUM			

LB-2 38,40 — seat wall Lighting

2 LIGHTING CONTROL PANEL SCHEDULES
NO SCALE

SCALE NONE — RFI-059

K M D — KAPLAN McLAUGHLIN DIAZ — ARCHITECTURE PLANNING — 222 VALLEJO SAN FRANCISCO, CA 94111 — (415) 398-5191 FAX (415) 394-7158

SCCD
VALLEJO CENTER
CONTRACT # A003.6123.01.V1

SKETCH NUMBER	DRAWING REFERENCE
ESK-16	E0.01
TITLE: RFI #59	DATE: 08/08/06

ABBREVIATIONS

AFF	ABOVE FINISHED FLOOR
BLDG	BUILDING
C	CONDUIT
C.O.	CONDUIT ONLY
(E)	EXISTING TO REMAIN
(ED)	EXISTING TO BE DEMOLISHED
(ER)	EXISTING TO BE RELOCATED
(EN)	EXISTING – NEW LOCATION
FA	FIRE ALARM
FAA	FIRE ALARM ANNUNCIATOR
FACP	FIRE ALARM CONTROL PANEL (EXISTING)
FAEP	FIRE ALARM EXTENDER PANEL
G; GND	GROUND(ED)
GFI	GROUND FAULT INTERRUPTER
LV	LOW VOLTAGE
MLO	MAIN LUGS ONLY
MSB	MAIN SWITCHBOARD
(N)	NEW
NEC	NATIONAL ELECTRICAL CODE
NFPA	NATIONAL FIRE PROTECTION ASSOCIATION
NTS	NOT TO SCALE
OL	OVERLOAD
OC	OVERCOUNTER +6" ABOVE BACK SPLASH.
P	POLE
PB	PULLBOX
(R)	RELOCATED
RM	ROOM
SPEC	SPECIFICATION(S)
TBB	TELEPHONE BACKBOARD
TBD	TO BE DETERMINED
TYP	TYPICAL
U.O.N.	UNLESS OTHERWISE NOTED
UG	UNDERGROUND
W/	WITH
W/O	WITHOUT
WP	WEATHERPROOF
XFMR	TRANSFORMER

Copy sent by e-mail to: Long Electric on 9/6/06

Ralph Larsen & Son, Inc.
General Contractors License No. 183341
300 8th Avenue
San Mateo, CA 94401-4221
Phone (650) 579-0339
Fax (650) 579-0349

Request for Information 059A

Detailed, RFIs Grouped by RFI Number

Vallejo Center for Solano Community College Dis
Northgate Business Park
545 Columbus Parkway
Vallejo, CA 94591

Project # 2604
Tel: (707) 649-8327 Fax: (707) 553-9728

Ralph Larsen & Son, Inc.

RFI #: 059A — Date Created: 8/28/2006

Answer Company	Answered By	Author Company	Authored By
		Ralph Larsen & Son, Inc. 300 8th Avenue San Mateo, CA 94401	Jay Tucker

Co-Respondent — Author RFI Number

Subject: Lighting control issues — Discipline — Category

Cc: Company Name — Contact Name — Copies — Notes

Question — Date Required: 9/9/2006

Review the attached RFI from Long Electric. The reply to RFI-059 did not show adding a motion detector (or detectors) in Room B103 to control the (TYPE F12) track lighting (circuits LB2-24 & LB2-26).
1. How do you want to control the track lighting in Room B103?
Long Electric's investigation of the LIGHTING CONTROL relays is that multiple circuits can not be controlled by one relay as shown in the reply to our RFI-059. However one override switch can be used to control several relays, thus allowing one over ride switch to control all the lights in a specific room or area ((or multiple rooms and areas even though we advise against using one over ride switch for multiple rooms (unless they are connected corridors or hallways).
2. Do you want us to separate the circuits so that only one circuit is on each relay in the Lighting Control Panels, in order ~~to comply~~ with manufacture's information on their relays?
We recommend using one override switch for each separate Room (SUCH AS B101, B103, & B106). We recommend moving the over ride switches for (non hallway) Rooms into the room that is being controlled. This (inside the room) location of over ride switches will make it less likely for someone to turn off the lights on a group of room users with out them being able to see the person turning off the override switch.
3. Do you intend to revise the sketches (provided in the reply to our RFI-059) to show these additional changes to the lighting controls?

Suggestion

Answer — Date Answered:

1A) Provide occupancy sensor to control track lighting only in Room B-103. Track lighting will not be controlled via LCP.
1B) Provide separate relay for each circuit.
1C) Override switches are to control areas as shown on response to RFI 059.
2) Provide separate relay for each circuit. Override switch configuration to remain as shown in response to RFI 059. Override switches are not intended to turn lighting OFF. They are intended to turn lighting ON after LCP sweep.
3) See attached sketch for addition of occupancy sensor in room B-103. Other revisions to sketches not required.

Valeria Balderramos
Alfa Tech Cambridge

Prolog Manager — Printed on: 8/27/2006 — RALPH — Page 1

SYMBOLS

- FLUORESCENT RECESSED FIXTURE
- COMPACT FLOURESCENT DOWNLIGHT
- SHADING OF ANY FIXTURE INDICATES UNSWITCHED EMERGENCY FIXTURE. PROVIDE 90 MINUTE BATTERY BACKUP BALLAST.
- EXIT SIGN, CEILING/WALL–MOUNTED, ON UNSWITCHED EMERGENCY CIRCUIT, BATTERY BACKUP, SHADED AREA INDICATES FACE(S) ON SIGN, ARROW INDICATES DIRECTION TO EXIT.
- DUPLEX RECEPTACLE – 20A, 125V, 3W, MOUNTED +18"AFF, (+42"AFF)
- DOUBLE DUPLEX RECEPTACLE – 20A, 125V, 3W MOUNTED +18"AFF, (+42"AFF)
- GFI DUPLEX RECEPTACLE MOUNTED +42" AFF
- NEMA L5–30 RECEPTACLE, 30A, 125V, MOUNTED +18"AFF
- NEMA L5–30 FLOOR RECEPTACLE, 30A, 125V
- QUAD RECEPTACLE, VOICE/DATA, 120V FLOOR BOX
- DUAL SERVICE RACEWAY, DATA/POWER, MOUNTED AT +42" AFF. DATA ON TOP, 96" O.C. POWER ON BOTTOM, 24" O.C.
- VOICE AND DATA OUTLET MOUNTED +18" AFF. PROVIDE 1"C UP TO 6" ABOVE ACCESSIBLE CEILING SPACE. (MOUNTED +42"AFF).
- DATA OUTLET MOUNTED +18" AFF. PROVIDE 1"C UP TO 6" ABOVE ACCESSIBLE CEILING SPACE. (MOUNTED +42"AFF).
- VOICE OUTLET MOUNTED +18" AFF. PROVIDE 1"C UP TO 6" ABOVE ACCESSIBLE CEILING SPACE. (MOUNTED +42"AFF).
- DATA OUTLET FOR WIRELESS ACCESS POINT: PROVIDE SINGLE–GANG BOX WITH MUDRING MOUNTED TO BOTTOM OF CEILING SLAB. PROVIDE 1–1/4"C TO ACCESSIBLE CEILING SPACE.
- +48" — SINGLE POLE SWITCH (SPST). "a" INDICATES CONTROL
- THREE–WAY SWITCH
- DIMMING SWITCH
- WALL MOUNTED OCCUPANCY SENSOR
- CEILING MOUNTED OCCUPANCY SENSOR
- PHOTOCELL
- KEYPAD. PROVIDE 3/4"C TO DOOR HARDWARE.
- CEILING MOUNTED SPEAKER. PROVIDE 1"C FROM SPEAKER TO SMART PANEL.
- CIRCUIT BREAKER–FIXED MOUNTED
- TRANSFORMER
- WIRE CROSSING – NO CONNECTION
- WIRE CONNECTION
- SURFACE MOUNTED PANELBOARD (FLUSH MOUNTED)
- DRY–TYPE TRANSFORMER
- MOTOR OUTLET WITH COMPLETE CONNECTION TO MOTOR AND CONTROLS
- MANUAL MOTOR STARTER W/ OVERLOAD PROTECTION
- NON–FUSED DISCONNECT SWITCH
- FUSED DISCONNECT SWITCH
- COMBINATION MAGNETIC MOTOR STARTER AND DISCONNECT SWITCH
- BRANCH CIRCUIT WIRING IN CONDUIT – CONCEALED IN CEILING OR WALL
- BRANCH CIRCUIT WIRING IN CONDUIT – UNDERGROUND OR IN FLOOR SLAB
- HOMERUN TO PANEL – 1/2"–1#12 MINIMUM. CROSS LINES INDICATE NUMBER OF PHASE WIRES IG = ISOLATED GROUND
- CONDUIT TURNED UP
- CONDUIT TURNED DOWN
- CEILING JUNCTION OR OUTLET BOX, MTD AFC
- WALL–MOUNTED JUNCTION OR OUTLET BOX, +18" U.O.N.
- LIQUID TIGHT FLEXIBLE METAL CONDUIT PER SPEC
- CONDUIT AND CONDUCTORS INSTALLED UNDERGROUND OR BELOW SLAB
- CONDUIT AND CONDUCTORS CONCEALED IN WALL OR CEILING
- A–1 — HOMERUN TO SWITCHBOARD, PANELBOARD, TERMINAL CABINET, ETC.
  - DENOTES GROUND WIRE; CROSS LINES DENOTES QUANTITY OF #12 CONDUCTORS U.O.N.; NO CROSS LINES DENOTES 1/2"C–2#12 & 1#12 G.
- AC 1 — MECHANICAL EQUIPMENT DESIGNATION
- 1 — SHEET NOTE NUMBER
- XXX — FEEDER NUMBER
- 1 / E6.1 — DETAIL NUMBER / SHEET NUMBER
- 1 — REVISION REFERENCE MARKER
- F1 — LIGHTING FIXTURE IDENTIFICATION TAG

SEE SHEET E4.00 FOR FIRE ALARM SYMBOLS LIST

GENERAL NOTES

1. ALL WORK IS TO BE CONSTRUCTED IN ACCORDANCE WITH LOCAL AND STATE CODES
2. THE DRAWINGS AND SPECIFICATIONS REPRESENT FINISHED SYSTEMS COMPLETE AND READY FOR USE. ANCILLARY DEVICES, WIRING, RACEWAY, CONNECTIONS AND SIMILAR WORK ALTHOUGH NOT EXPLICITLY STATED BUT REQUIRED FOR PROPER SYSTEM OPERATION OR TO COMPLY WITH CODE ARE TO BE INCLUDED AS A REQUIREMENT OF THE CONTRACT WITHOUT ADDITIONAL COMPENSATION.
3. ELECTRICAL DRAWINGS ARE DIAGRAMMATIC AND INDICATE THE GENERAL LOCATION AND ARRANGEMENT OF ELECTRICAL WORK. LAYOUT, ROUGH–IN, AND EXACT LOCATION OF ALL FIXTURES, DEVICES, AND OUTLETS IS TO BE BASED ON THE ARCHITECTURAL DRAWINGS AND COORDINATED WITH FINAL ARRANGEMENT OF MECHANICAL EQUIPMENT.
4. REFER TO DRAWINGS OF OTHER TRADES FOR COORDINATION OF ELECTRICAL CONSTRUCTION. THE LOCATION OF MECHANICAL EQUIPMENT IS SHOWN DIAGRAMMATICALLY. EXACT LOCATION TO BE FIELD DETERMINED. SEE SPECS FOR TRADE COORDINATION DRAWING SUBMITTAL REQUIREMENTS. DRAWINGS FOR LENGTHS AND LOCATIONS OF ALL EQUIPMENT TO BE INSTALLED UNDER ELECTRICAL CONTRACT.
5. DO NOT COMMENCE INSTALLATION OF ELECTRICAL SYSTEMS AND EQUIPMENT WITHOUT RELATED SHOP DRAWING APPROVALS.
6. PROVIDE UL LISTED FIRE RATED SEALS FOR ALL RACEWAY PENETRATIONS THROUGH FIRE RATED WALLS, SLABS, AND CEILINGS.
7. COORDINATE ALL CONTROL SYSTEM DEVICES, WIRING, AND CONNECTIONS WITH REQUIREMENTS OF DRIVEN EQUIPMENT.
8. PROVIDE SUITABLE ANCHORAGE AND SUPPORT OF ALL ELECTRICAL EQUIPMENT INCLUDING DEVICES AND RACEWAYS IN ACCORDANCE WITH ESTABLISHED CODES AND THE SPECIFICATIONS.
9. REFER TO THE SPECIFICATIONS FOR ADDITIONAL REQUIREMENTS.
10. THE DRAWINGS AND SPECIFICATIONS ARE COMPLIMENTARY AND WHAT IS REQUIRED BY EITHER IS TO BE INFERRED TO BE REQUIRED BY BOTH.
11. EQUIPMENT AND DEVICES FURNISHED UNDER OTHER DIVISIONS OF THIS CONTRACT, BY THE OWNER, OR BY OTHER CONTRACTS, ARE TO BE CONNECTED UNDER THIS CONTRACT.
12. OMISSIONS OR CONFLICTS BETWEEN VARIOUS ELEMENTS OF THE DRAWINGS, NOTES, AND DETAILS ARE TO BE BROUGHT TO THE ATTENTION OF THE ENGINEER AND RESOLVED BEFORE PROCEEDING WITH THE WORK.
13. PROVIDE CONCEALED AND FLUSH MOUNTED INSTALLATION OF ALL DEVICES AND EQUIPMENT IN ALL AREAS U.O.N.
14. PROVIDE SEPARATE EQUIPMENT GROUNDING CONDUCTOR IN ALL 120 VOLT MULTI–WIRE CIRCUITS.
15. PROVIDE #10 AWG THHN/THWN COPPER NEUTRAL CONDUCTOR FOR ALL MULTI–WIRE 120 VOLT 20 AMP 3–PHASE CIRCUITS WITH COMMON NEUTRAL.
16. FOR 120 VOLT, 20 AMP CIRCUITS WHERE THE CIRCUIT DISTANCE FROM THE PANELBOARD TO THE FARTHEST DEVICE/FIXTURE EXCEEDS 75 FEET PROVIDE #10 SIZE CONDUCTOR.
17. PROVIDE AS–BUILT DRAWINGS IN AUTOCAD FORMAT PER SPECIFICATIONS.
18. ALL ELECTRICAL CONDUIT IS TO BE RUN CONCEALED AND PARALLEL AND PERPENDICULLAR TO BUILDING LINES. PRIOR TO INSALLATION OF ANY EXPOSED CONDUIT VERIFY WITH ARCHITECT.
19. PROVIDE TYPEWRITTEN DIRECTORY IN ALL PANELBOARDS.
20. PROVIDE APPROPROATE SEISMIC JOINTS FOR ALL RACEWAYS TRAVERSING SIESMIC SEPERATIONS.

DRAWING INDEX

SHEET NO	DESCRIPTION	DD	75% CD	DSA	–
E0.01	ELECTRICAL LEGEND, ABBREVIATIONS, SYMBOLS, DRAWING INDEX AND GENERAL NOTES	X	X	X	
E0.02	LIGHTING FIXTURE SCHEDULE AND TITLE 24 COMPLIANCE FORMS	X	X	X	
E0.03	TITLE 24 COMPLIANCE FORMS (CONTINUED)			X	
E1.00	ELECTRICAL SITE PLAN	X	X	X	
E2.11	BUILDING "A" FIRST FLOOR LIGHTING PLAN	X	X	X	
E2.12	BUILDING "B" FIRST FLOOR LIGHTING PLAN	X	X	X	
E2.21	BUILDING "A" SECOND FLOOR LIGHTING PLAN	X	X	X	
E3.11	BUILDING "A" FIRST FLOOR POWER PLAN	X	X	X	
E3.12	BUILDING "B" FIRST FLOOR POWER PLAN	X	X	X	
E3.21	BUILDING "A" SECOND FLOOR POWER PLAN	X	X	X	
E3.22	BUILDING "B" ROOF POWER PLAN	X	X	X	
E3.31	BUILDING "A" ROOF POWER PLAN	X	X	X	
E4.00	FIRE ALARM SYSTEM NOTES, SYMBOLS, CABLE LEGEND, SEQUENCE OF OPERATION, 1–LINE DIAGRAM, AND DETAILS			X	
E4.11	BUILDING "A" FIRST FLOOR FIRE ALARM PLAN, DETAILS, AND CALCULATIONS	X	X	X	
E4.12	BUILDING "B" FIRST FLOOR FIRE ALARM PLAN AND CALCULATIONS	X	X	X	
E4.21	BUILDING "A" SECOND FLOOR FIRE ALARM PLAN, DETAILS, AND CALCULATIONS	X	X	X	
E5.01	SINGLE LINE DIAGRAM	X	X	X	
E5.02	PANELBOARD SCHEDULES			X	
E5.03	PANELBOARD SCHEDULES			X	
E6.01	ELECTRICAL DETAILS			X	
E6.02	ELECTRICAL DETAILS			X	

APPROVAL STAMP
IDENTIFICATION STAMP
DIVISION OF THE STATE ARCHITECT
APPL 02- 107417
AC — FLS TH — SS NL
DATE: 12/21/05

NO.	ISSUED FOR	DATE
1	DSA APPROVAL SET	12/08/05

REGISTERED PROFESSIONAL ENGINEER — JOSEPH W. MAY — E 10951 — EXP. 6/30/07 — ELECTRICAL — STATE OF CALIFORNIA
Date Signed 12/06/05
CERTIFIED BY

K M D
KAPLAN McLAUGHLIN DIAZ
ARCHITECTURE PLANNING
222 VALLEJO SAN FRANCISCO, CA 94111
(415) 398-5191 FAX (415) 394-7158

ALFATECH
120 MONTGOMERY STREET, SUITE 715 415-403-3000
SAN FRANCISCO, CALIFORNIA 94104 FAX: 415-788-6040
SAN JOSE • NEW JERSEY • SINGAPORE • AUSTRALIA
AT Project No. 204231

SOLANO COMMUNITY COLLEGE

SCCD
VALLEJO CENTER
Contract # A003.6123.01.V1
AS BUILTS

PROJECT NO. 419-201 — DATE 12-08-05

ELECTRICAL LEGEND, ABBREVIATIONS, SYMBOLS, DRAWING INDEX AND GENERAL NOTES

E0.01

PLOT DATE:

COPYRIGHT © 2004 BY KMD (KAPLAN McLAUGHLIN DIAZ). ALL RIGHTS RESERVED.

PERFORMANCE CERTIFICATE OF COMPLIANCE — Part 1 of 3 — PERF-1

PROJECT NAME: Vallejo Center New Classroom Building	DATE: 7/13/2005
PROJECT ADDRESS: Northgate Business Park Parcel 8 Columbus Parkway Vallejo	Building Permit #
PRINCIPAL DESIGNER - ENVELOPE: Kaplan McLaughlin Diaz — TELEPHONE: (415) 398-5191	Checked by/Date
DOCUMENTATION AUTHOR: EnergySoft, LLC — TELEPHONE: (415) 897-6400	Enforcement Agency Use

GENERAL INFORMATION

DATE OF PLANS: 5/26/05	BUILDING CONDITIONED FLOOR AREA: 38,453 SqFt.	CLIMATE ZONE: 3
BUILDING TYPE: [X] NONRESIDENTIAL	[ ] HIGH RISE RESIDENTIAL	[ ] HOTEL/MOTEL GUEST ROOM
PHASE OF CONSTRUCTION: [X] NEW CONSTRUCTION	[ ] ADDITION [ ] ALTERATION	[ ] EXISTING + ADDITION

STATEMENT OF COMPLIANCE

This Certificate of Compliance lists the building features and performance specifications needed to comply with Title 24, Parts 1 and 6, of the State Building Code. This certificate applies only to a Building using the performance compliance approach.

DOCUMENTATION AUTHOR: Ted M. Tiffany — SIGNATURE: — DATE:

The Principal Designers hereby certify that the proposed building design represented in the construction documents and modelled for this permit application are consistent with all other forms and worksheets, specifications, and other calculations submitted with this permit application. The proposed building as designed meets the energy efficiency requirements of the State Building Code, Title 24, Part 6.

ENV. LTG. MECH.

[ ] [ ] [ ] 1. I hereby affirm that I am eligible under the provisions of Division 3 of the Business and Professions Code to sign this document as the person responsible for its preparation; and that I am licensed as a civil engineer, mechanical engineer, electrical engineer or architect.

[ ] [ ] [ ] 2. I affirm that I am eligible under the provisions of Division 3 of the Business and Professions Code Section 5537.2 or 6737.3 to sign this document as the person responsible for its preparation; and that I am a licensed contractor preparing documents for work that I have contracted to perform.

[ ] [ ] [ ] 3. I affirm that I am eligible under Division 3 of the Business and Professions Code to sign this document because it pertains to a structure or type of work described as exempt pusuant to Business and Professions Code Sections 5537, 5538, and 6737.1. (These sections of the Business and Professions Code ae printed in full in the Nonresidential Manual.)

ENVELOPE COMPLIANCE

Indicate location on plans of Note Block for Mandatory Measures — Required Forms: ENV-1

PRINCIPAL ENVELOPE DESIGNER - NAME: Kaplan McLaughlin Diaz — SIGNATURE: — LIC. NO.: — DATE:

LIGHTING COMPLIANCE

Indicate location on plans of Note Block for Mandatory Measures: E0.3 — Required Forms: LTG-1, LTG-3

PRINCIPAL LIGHTING DESIGNER - NAME: Alfa Tech — SIGNATURE: [signature] — LIC. NO.: E-10951 — DATE: 07/14/05

MECHANICAL COMPLIANCE

Indicate location on plans of Note Block for Mandatory Measures — Required Forms: MECH-1, MECH-2, MECH-3

PRINCIPAL MECHANICAL DESIGNER - NAME: Alfa Tech — SIGNATURE: [signature] — LIC. NO.: M29691 — DATE: 12-7-05

Run Initiation Time: 07/05/05 16:07:55 Run Code: 1120604875
EnergyPro 3.1 By EnergySoft User Number: 0000 Job Number: 05152 Page: 3 of 40

LIGHTING COMPLIANCE SUMMARY — Part 1 of 2 — LTG-1

PROJECT NAME: Vallejo Center New Classroom Building — DATE: 7/13/2005

INSTALLED LIGHTING SCHEDULE

Code	Luminaire Description	Lamps: Type Description	Lamps: #	Lamps: Watts Per Lamp	Ballasts: Description	Ballasts: #	Luminaire (Lamp + Ballast): #	Luminaire (Lamp + Ballast): Watts	Total Watts
F10	(1) 32w Compact Fluorescent	CFS32V/GR10q	1	32	Electronic	1.0	94	32.0	3,008
F11	(1) 32w Compact Fluorescent	CFS32V/GR10q	1	32	Electronic	1.0	3	32.0	96
F12	45w Track Light 45 w per Foot	Track Lights	1	45	No Ballast		102	45.0	4,590
F1A	(2) 4 ft Fluorescent T8 Elec	F32T8	2	32	Electronic	1.0	2	62.0	124
F1B	(4) 4 ft Fluorescent T8 Elec	F32T8	4	32	Electronic	1.0	1	114.0	114
F1C	(6) 4 ft Fluorescent T8 Elec	F32T8	6	32	Electronic	1.0	8	192.0	1,536
F20	(2) 4 ft Fluorescent T8 Elec	F32T8	2	32	Electronic	1.0	16	62.0	992
F21	(2) 4 ft Fluorescent T8 Elec	F32T8	2	32	Electronic	1.0	5	62.0	310
F2A	(2) 4 ft Fluorescent T8 Elec	F32T8	2	32	Electronic	1.0	5	62.0	310
F2B	(6) 4 ft Fluorescent T8 Elec	F32T8	6	32	Electronic	1.0	20	192.0	3,840
F3	(3) 4 ft Fluorescent T8 Elec	F32T8	3	32	Electronic	1.0	202	93.0	18,786
F3A	(2) 4 ft Fluorescent T8 Elec	F32T8	2	32	Electronic	1.0	18	62.0	1,116
F4	(2) 4 ft Fluorescent T8 Elec	F32T8	2	32	Electronic	1.0	18	62.0	1,116

Lighting Schedule on Plans Shows Exterior Lighting Meets
[ ] Efficacy and Control Requirement of 130(c)
[ ] Control Requirements of 131(f)

Subtotal from this Page	35,938
Total	38,718
Portable Lighting (From LTG-1)	0
Less Control Credit Watts (From LTG-3)	3,409
Adjusted Actual Watts	35,309

MANDATORY AUTOMATIC CONTROLS

Control Location (Room #)	Control Identification	Control Type (Auto Time Switch, Exterior, etc.)	Space Controlled	Note to Field

CONTROLS FOR CREDIT

Control Location (Room # or Dwg. #)	Control Identification	Control Type (Occupant, Daylight, Dimming, etc.)	Luminaires Controlled: Type	Luminaires Controlled: # of Luminaires	Note to Field
1) Lobby Area		Occ Sensor > 250 sqft	F7B	9	
1) Lobby Area		Occ Sensor > 250 sqft	F7A	8	
1) Lobby Area		Occ Sensor > 250 sqft	F10	2	
1) Lecture Hall Area		Occ Sensor > 250 sqft	F7A	8	

NOTES TO FIELD - For Building Department Use Only

Run Initiation Time: 07/05/05 16:07:55 Run Code: 1120604875
EnergyPro 3.1 By EnergySoft User Number: 0000 Job Number: 05152 Page: 12 of 40

LIGHTING COMPLIANCE SUMMARY — Part 1 of 2 — LTG-1

PROJECT NAME: Vallejo Center New Classroom Building — DATE: 7/13/2005

INSTALLED LIGHTING SCHEDULE

Code	Luminaire Description	Lamps: Type Description	Lamps: #	Lamps: Watts Per Lamp	Ballasts: Description	Ballasts: #	Luminaire (Lamp + Ballast): #	Luminaire (Lamp + Ballast): Watts	Total Watts
F5	(1) 4 ft Fluorescent T5 Elec	F28T5	1	28	Electronic	1.0	6	32.0	192
F6	(1) 4 ft Fluorescent T5 Elec	F40T5/50BX	1	90	Electronic	1.0	1	90.0	90
F7A	(2) 4 ft Fluorescent T8 Elec	F32T8	2	32	Electronic	1.0	23	62.0	1,426
F7B	(2) 3 ft Fluorescent T8 Elec	F25T8	2	25	Electronic	1.0	19	48.0	912
F8	(2) 3 ft Fluorescent T8 Elec	F25T8	2	25	Electronic	1.0	2	48.0	96
F9	(1) 32w Compact Fluorescent	CFS32V/GR10q	1	32	Electronic	1.0	2	32.0	64

Lighting Schedule on Plans Shows Exterior Lighting Meets
[ ] Efficacy and Control Requirement of 130(c)
[ ] Control Requirements of 131(f)

Subtotal from this Page	2,780
Total	38,718
Portable Lighting (From LTG-1)	0
Less Control Credit Watts (From LTG-3)	3,409
Adjusted Actual Watts	35,309

MANDATORY AUTOMATIC CONTROLS

Control Location (Room #)	Control Identification	Control Type (Auto Time Switch, Exterior, etc.)	Space Controlled	Note to Field

CONTROLS FOR CREDIT

Control Location (Room # or Dwg. #)	Control Identification	Control Type (Occupant, Daylight, Dimming, etc.)	Luminaires Controlled: Type	Luminaires Controlled: # of Luminaires	Note to Field
1) Lecture Hall Area		Occ Sensor > 250 sqft	F7B	4	
1) Lecture Hall Area		Occ Sensor > 250 sqft	F10	3	
2) Sci Lab/Prep Area		Occ Sensor > 250 sqft	F3	36	
2) Classrooms Area		Occ Sensor <= 250 sqft	F3	45	

NOTES TO FIELD - For Building Department Use Only

Run Initiation Time: 07/05/05 16:07:55 Run Code: 1120604875
EnergyPro 3.1 By EnergySoft User Number: 0000 Job Number: 05152 Page: 13 of 40

LIGHTING COMPLIANCE SUMMARY — Part 1 of 2 — LTG-1

PROJECT NAME: Vallejo Center New Classroom Building — DATE: 7/13/2005

INSTALLED LIGHTING SCHEDULE

Code	Luminaire Description	Lamps: Type Description	Lamps: #	Lamps: Watts Per Lamp	Ballasts: Description	Ballasts: #	Luminaire (Lamp + Ballast): #	Luminaire (Lamp + Ballast): Watts	Total Watts

Lighting Schedule on Plans Shows Exterior Lighting Meets
[ ] Efficacy and Control Requirement of 130(c)
[ ] Control Requirements of 131(f)

Subtotal from this Page	0
Total	38,718
Portable Lighting (From LTG-1)	0
Less Control Credit Watts (From LTG-3)	3,409
Adjusted Actual Watts	35,309

MANDATORY AUTOMATIC CONTROLS

Control Location (Room #)	Control Identification	Control Type (Auto Time Switch, Exterior, etc.)	Space Controlled	Note to Field

CONTROLS FOR CREDIT

Control Location (Room # or Dwg. #)	Control Identification	Control Type (Occupant, Daylight, Dimming, etc.)	Luminaires Controlled: Type	Luminaires Controlled: # of Luminaires	Note to Field
2) Offices Area		Occ Sensor > 250 sqft	F10	11	
2) Offices Area		Occ Sensor > 250 sqft	F1C	1	
2) Offices Area		Occ Sensor > 250 sqft	F1A	1	
2) Offices Area		Occ Sensor Storage	F4	1	

NOTES TO FIELD - For Building Department Use Only

Run Initiation Time: 07/05/05 16:07:55 Run Code: 1120604875
EnergyPro 3.1 By EnergySoft User Number: 0000 Job Number: 05152 Page: 14 of 40

LIGHTING FIXTURE SCHEDULE

TAG	DESCRIPTION	MANUFACTURER/MODEL #	VOLTS	MTG	LAMPS	WATTS	REMARKS	APPLICATION
F1A	4' (2) LAMP, DIRECT/INDIRECT PENDANT FIXTURE	CORELITE AP SERIES OR APPROVED EQUAL	277	PENDANT. REFER TO 1 & 2/E6.01	(2) 32W T8 3500K	62	PROVIDE ELECTRONIC BALLAST. FINISHES TO BE SELECTED BY ARCHITECT. PROVIDE AIRCRAFT CABLE AND 18" SUSPENSION LENGTH.	LECTURE HALL & MEETING ROOM
F1B	8' (4) LAMP, DIRECT/INDIRECT PENDANT FIXTURE				(4) 32W T8 3500K	124		
F1C	12' (6) LAMP, DIRECT/INDIRECT PENDANT FIXTURE				(6) 32W T8 3500K	186		
F2A	4' (2) LAMP, DIRECT/INDIRECT PENDANT FIXTURE	CORELITE SB SERIES OR APPROVED EQUAL	277	PENDANT. REFER TO 1 & 2/E6.01	(2) 32W T8 3500K	62	PROVIDE ELECTRONIC DIMMING BALLAST. FINISHES TO BE SELECTED BY ARCHITECT. PROVIDE AIRCRAFT CABLE AND 24" SUSPENSION LENGTH.	MULTI PURPOSE ROOM
F2B	12' (6) LAMP, DIRECT/INDIRECT PENDANT FIXTURE				(6) 32W T8 3500K	186		
F3	2'X4' (3) LAMP, DIRECT INDIRECT RECESSED FIXTURE	LIGHTOLIER COFFAIRE SERIES OR APPROVED EQUAL	277	RECESSED. REFER TO 4/E6.01	(3) 32W T8 3500K	93	PROVIDE ELECTRONIC BALLAST. FINISHES TO BE SELECTED BY ARCHITECT.	TYPICAL IN CLASSROOMS & HALLWAYS
F3A	2'X4' (2) LAMP, DIRECT INDIRECT RECESSED FIXTURE				(2) 32W T8 3500K	62		
F4	2'X4' (2) LAMP, LENSED TROFFER	LITHONIA LIGHTING GT8 SERIES OR APPROVED EQUAL	277	RECESSED. REFER TO 4/E6.01	(2) 32W T8 3500K	62	PROVIDE ELECTRONIC BALLAST. FINISHES TO BE SELECTED BY ARCHITECT.	STORAGE ROOMS, SERVER ROOM
F5	CIRCULAR COVE LIGHTING FIXTURE	TUBE LIGHTING PRODUCTS BPS-139 SERIES OR APPROVED EQUAL	277	SURFACE	(1)2G11 F27BX T5, 3500K	27	PROVIDE ELECTRONIC BALLAST. FINISHES TO BE SELECTED BY ARCHITECT.	HALLWAY & RECEPTION DESK
F6	LINEAR COVE LIGHTING FIXTURE	TUBE LIGHTING PRODUCTS BPS-139 SERIES OR APPROVED EQUAL	277	SURFACE	(1)2G11 F40BX T5, 3500K	40	PROVIDE ELECTRONIC BALLAST. FINISHES TO BE SELECTED BY ARCHITECT.	HALLWAY & RECEPTION DESK
F7A	4' (2) LAMP, PARABOLIC LINEAR SLOT	LITHONIA LIGHTING 9NAT SERIES OR APPROVED EQUAL	277	RECESSED	(2) 32W T8 3500K	62	PROVIDE ELECTRONIC BALLAST, 3" LOUVER SPACING, AND 2" DEEP LOUVER. FINISHES TO BE SELECTED BY ARCHITECT. USE 4' AND 3' FIXTURE TO PROVIDE CONTINUOUS RUNS.	RESTROOM
F7B	3' (2) LAMP, PARABOLIC LINEAR SLOT				(2) 25W T8 3500K	48		
F8	4' (2) LAMP, LENSED STRIP LIGHT	LITHONIA LIGHTING CA SERIES OR APPROVED EQUAL	277	SURFACE	(2) 32W T8 3500K	62	PROVIDE ELECTRONIC BALLAST.	SHOWERS
F9	9" APERTURE COMPACT FLUORESCENT DOWNLIGHT	GOTHAM LIGHTING LGF SERIES OR APPROVED EQUAL	277	RECESSED	(1) 32W TRT 3500K	35	PROVIDE ELECTRONIC BALLAST. FINISHES TO BE SELECTED BY ARCHITECT. UL LISTED FOR WET LOCATIONS.	SHOWERS
F10	6" APERTURE COMPACT FLUORESCENT DOWNLIGHT	GOTHAM LIGHTING AF SERIES OR APPROVED EQUAL	277	RECESSED	(1) 32W TRT 3500K	35	PROVIDE ELECTRONIC BALLAST. FINISHES TO BE SELECTED BY ARCHITECT.	CORRIDORS & LOBBIES
F10A	9" APERTURE COMPACT FLUORESCENT DOWNLIGHT				(1) 42W TRT 3500K	46		EXTERIOR CANOPIES
F11	6" APERTURE COMPACT FLUORESCENT WALLWASHER	GOTHAM LIGHTING AFW SERIES OR APPROVED EQUAL	277	RECESSED	(1) 32W TRT 3500K	35	PROVIDE ELECTRONIC BALLAST. FINISHES TO BE SELECTED BY ARCHITECT.	LECTURE HALL
F12	TRACK LIGHTING	LIGHTOLIER LYTESPAN TRACK SERIES OR APPROVED EQUAL	120	PENDANT	(1)50W MR16	54/HEAD	PROVIDE LIGHTOLIER BASIC-PLAIN TRACK, SOF-TECH SERIES HEAD, ENCLOSED SPOT MR16 (6273BWH) WITH INTEGRAL ELECTRONIC TRANSFORMER. PROVIDE LIGHTOLIER "QE" DIMMERS FOR SILIENT DIMMING. PROVIDE STEM MOUNTING WITH 18" SUSPENSION.	ART ROOM AND GALLERY
F13	NOT USED							
F14	METAL HALIDE POLE MOUNTED FIXTURE	SE'LUX RITORNO SQUARE ASYMETRIC OR APPROVED EQUAL	277	POLE. REFER TO 7/E6.01	175W MH	205	FINISH TO BE SELECTED BY ARCHITECT. PROVIDE 24" CONCRETE FOOTING FOR PARKING LOT AND ROADWAY FIXTURES ONLY. BAYWALK FIXTURES DO NOT REQUIRE FOOTING.	EXTERIOR
F15	METAL HALIDE, LOW-LEVEL DIRECTIONAL LUMINAIRE	BEGA 8731MH	277	ON GRADE	(1) 39W T6 MH	45	BLACK FINISH. PROVIDE CAST WEATHERPROOF JUNCTION BOX BELOW FIXTURE IN FOUNDATION.	EXTERIOR
F16	COMPACT FLUORESCENT WALL-RECESSED LUMINAIRE	~~BEGA 3008P~~ BEGA 2022	~~277~~ 120	WALL MOUNT	(1) ~~18W PLL~~ 50W T4	20	~~PROVIDE WITH INTEGRAL TRANSFORMER.~~	EXTERIOR - SEAT WALL
F17	NOT USED							
F18	(1) LAMP, WALL MOUNTED EXTERIOR FIXTURE	BEGA 3431P SERIES OR APPROVED EQUAL	277	WALL MOUNT	(1) 32W CF	35		EXTERIOR
F19	METAL HALIDE, IN-GRADE UPLIGHT	HYDREL 9100 SERIES OR APPROVED EQUAL	277	IN GRADE	(1) 50W MH	58		EXTERIOR
F20	8' (2) LAMP, DIRECT/INDIRECT WALL MOUNTED FIXTURE	LIGHTOLIER LP-18 SERIES OR APPROVED EQUAL	277	WALL. REFER TO 3/E6.01	(2) 32W T8 3500K	62	PROVIDE ELECTRONIC BALLAST. FINISHES TO BE SELECTED BY ARCHITECT. MOUNT AT +7-6" AFF TO BOTTOM OF FIXTURE.	CORRIDOR
F21	4' (2) LAMP FLUORESCENT STRIPLIGHT	LITHONIA LIGHTING AF SERIES OR APPROVED EQUAL	277	PENDANT	(2) 32W T8 3500K	62	PROVIDE ELECTRONIC BALLAST.	ELEC/MECH ROOMS AND STORAGE
F22	4' (2) LAMP, FLUORESCENT WALL BRACKET	LITHONIA LIGHTING LITEPUFF SERIES (11889) OR APPROVED EQUAL	277	WALL	(2) 32W T8 3500K	62	PROVIDE ELECTRONIC BALLAST. MOUNT AT +7'-0" ABOVE FINISHED FLOOR OR LANDING.	STAIRWELL
F23	COMPACT FLUORESCENT, NON-METALLIC, VAPOR-PROOF FIXTURE	CANLET OR APPROVED EQUAL	277	WALL	(1) 26W CF	27		ELEVATOR PIT
	EXIT SIGN	LITHONIA LIGHTING LQM-EL-N SERIES OR APPROVED EQUAL	120/277	CEILING/WALL	LED	–	PROVIDE EXIT SIGN WITH NUMBER OF FACES AND ARROWS SHOWN ON PLANS. PROVIDE GREEN LETTERING ON WHITE HOUSING. PROVIDE 90 MINUTE INTERNAL BATTERY BACK-UP.	EGRESS PATHWAY

RFI # 116

NOTES:
A. HIGH POWER FACTOR ELECTRONIC BALLAST.
B. PROVIDE INTERNAL BATTERY BACKUP BALLAST WHERE INDICATED ON DRAWINGS.

RFI-195

1. Provide Active Safety self-illuminating exit sign (pdf attached). Confirm selection with the architect.
2. Exit fixture should be single face on west side in corridor B-100

J. Fay
11/20/06
Alfa Tech Cambridge Group

1. Model selection: Wall Mount-Single Face
Color selection: Brushed Aluminum
Model No.: 2002 SWMA

Melanie Kung/KMD
11/21/06

APPROVAL STAMP
IDENTIFICATION STAMP
DIVISION OF THE STATE ARCHITECT
APPL 02- 107417
AC [initials] FLS TH SS [initials]
DATE: 12/21/05

NO.	ISSUED FOR	DATE
1	DSA APPROVAL SET	12/08/05

REGISTERED PROFESSIONAL ENGINEER — JOSEPH W. FAY — E 10951 — EXP. 6/30/07 — ELECTRICAL — STATE OF CALIFORNIA
Date Signed 12/06/05
CERTIFIED BY

K M D
KAPLAN McLAUGHLIN DIAZ
ARCHITECTURE PLANNING
222 VALLEJO SAN FRANCISCO, CA 94111
(415) 398-5191 FAX (415) 394-7158

ALFATECH
120 MONTGOMERY STREET, SUITE 715 415-403-3000
SAN FRANCISCO, CALIFORNIA 94104 FAX: 415-788-6040
SAN JOSE · NEW JERSEY · SINGAPORE · AUSTRALIA
AT Project No. 204231

SOLANO COMMUNITY COLLEGE

SCCD
VALLEJO CENTER
Contract # A003.6123.01.V1

PROJECT NO. 419-201 — DATE 12-08-05

LIGHTING FIXTURE SCHEDULE AND TITLE 24
AS BUILTS

E0.02

PLOT DATE:

COPYRIGHT © 2004 BY KMD (KAPLAN McLAUGHLIN DIAZ). ALL RIGHTS RESERVED.

LIGHTING COMPLIANCE SUMMARY — Part1 of2 LTG-1

PROJECT NAME: Vallejo Center New Classroom Building — DATE: 7/13/2005

INSTALLED LIGHTING SCHEDULE

Code	LUMINAIRE DESCRIPTION	LAMPS TYPE DESCRIPTION	LAMPS #	LAMPS Watts Per Lamp	BALLASTS DESCRIPTION	BALLASTS #	Luminaire (Lamp + Ballast) #	Luminaire (Lamp + Ballast) Watts	Total Watts

Lighting Schedule on Plans Shows Exterior Lighting Meets

☐ Efficacy and Control Requirement of 130(c)

☐ Control Requirements of 131(f)

Subtotal from this Page	0
Total	38,718
Portable Lighting (From LTG-1)	0
Less Control Credit Watts (From LTG-3)	3,409
Adjusted Actual Watts	35,309

MANDATORY AUTOMATIC CONTROLS

CONTROL LOCATION (Room #)	CONTROL IDENTIFICATION	CONTROL TYPE (Auto Time Switch, Exterior, etc)	SPACE CONTROLLED	NOTE TO FIELD

CONTROLS FOR CREDIT

CONTROL LOCATION (Room # or Dwg. #)	CONTROL IDENTIFICATION	CONTROL TYPE (Occupant, Daylight, Dimming, etc)	LUMINAIRES CONTROLLED TYPE	LUMINAIRES CONTROLLED # OF LUMINAIRES	NOTE TO FIELD
2: Offices Area		Occ Sensor > 250 sqft	F4	3	
2: Offices Area		Occ Sensor <= 250 sqft	F3	14	
1: Computer Lab Area 2		Occ Sensor <= 250 sqft	F3	12	
1: Computer Lab Area 1		Occ Sensor <= 250 sqft	F3	12	

NOTES TO FIELD - For Building Department Use Only

Run Initiation Time: 07/05/05 16:07:55 Run Code: 1120604875

EnergyPro 3.1 By EnergySoft User Number: 0000 Job Number: 05152 Page: 15 of 40

LIGHTING COMPLIANCE SUMMARY — Part1 of2 LTG-1

PROJECT NAME: Vallejo Center New Classroom Building — DATE: 7/13/2005

INSTALLED LIGHTING SCHEDULE

Code	LUMINAIRE DESCRIPTION	LAMPS TYPE DESCRIPTION	LAMPS #	LAMPS Watts Per Lamp	BALLASTS DESCRIPTION	BALLASTS #	Luminaire (Lamp + Ballast) #	Luminaire (Lamp + Ballast) Watts	Total Watts

Lighting Schedule on Plans Shows Exterior Lighting Meets

☐ Efficacy and Control Requirement of 130(c)

☐ Control Requirements of 131(f)

Subtotal from this Page	0
Total	38,718
Portable Lighting (From LTG-1)	0
Less Control Credit Watts (From LTG-3)	3,409
Adjusted Actual Watts	35,309

MANDATORY AUTOMATIC CONTROLS

CONTROL LOCATION (Room #)	CONTROL IDENTIFICATION	CONTROL TYPE (Auto Time Switch, Exterior, etc)	SPACE CONTROLLED	NOTE TO FIELD

CONTROLS FOR CREDIT

CONTROL LOCATION (Room # or Dwg. #)	CONTROL IDENTIFICATION	CONTROL TYPE (Occupant, Daylight, Dimming, etc)	LUMINAIRES CONTROLLED TYPE	LUMINAIRES CONTROLLED # OF LUMINAIRES	NOTE TO FIELD
1: Group Study Area 2		Occ Sensor <= 250 sqft	F3	4	
1: Group Study Area 1		Occ Sensor <= 250 sqft	F3	4	
1: Learning Lab Area		Occ Sensor <= 250 sqft	F3	14	
1: Classrooms Area		Occ Sensor <= 250 sqft	F3	33	

NOTES TO FIELD - For Building Department Use Only

Run Initiation Time: 07/05/05 16:07:55 Run Code: 1120604875

EnergyPro 3.1 By EnergySoft User Number: 0000 Job Number: 05152 Page: 16 of 40

LIGHTING COMPLIANCE SUMMARY — Part1 of2 LTG-1

PROJECT NAME: Vallejo Center New Classroom Building — DATE: 7/13/2005

INSTALLED LIGHTING SCHEDULE

Code	LUMINAIRE DESCRIPTION	LAMPS TYPE DESCRIPTION	LAMPS #	LAMPS Watts Per Lamp	BALLASTS DESCRIPTION	BALLASTS #	Luminaire (Lamp + Ballast) #	Luminaire (Lamp + Ballast) Watts	Total Watts

Lighting Schedule on Plans Shows Exterior Lighting Meets

☐ Efficacy and Control Requirement of 130(c)

☐ Control Requirements of 131(f)

Subtotal from this Page	0
Total	38,718
Portable Lighting (From LTG-1)	0
Less Control Credit Watts (From LTG-3)	3,409
Adjusted Actual Watts	35,309

MANDATORY AUTOMATIC CONTROLS

CONTROL LOCATION (Room #)	CONTROL IDENTIFICATION	CONTROL TYPE (Auto Time Switch, Exterior, etc)	SPACE CONTROLLED	NOTE TO FIELD

CONTROLS FOR CREDIT

CONTROL LOCATION (Room # or Dwg. #)	CONTROL IDENTIFICATION	CONTROL TYPE (Occupant, Daylight, Dimming, etc)	LUMINAIRES CONTROLLED TYPE	LUMINAIRES CONTROLLED # OF LUMINAIRES	NOTE TO FIELD
1: Fin-Aid Office Area		Occ Sensor <= 250 sqft	F3	4	
1: Admin Office Area		Occ Sensor > 250 sqft	F6	1	
1: Admin Office Area		Occ Sensor > 250 sqft	F3	6	
1: Admin Office Area		Occ Sensor <= 250 sqft	F3	4	

NOTES TO FIELD - For Building Department Use Only

Run Initiation Time: 07/05/05 16:07:55 Run Code: 1120604875

EnergyPro 3.1 By EnergySoft User Number: 0000 Job Number: 05152 Page: 17 of 40

LIGHTING MANDATORY MEASURES — LTG-MM

PROJECT NAME: Vallejo Center New Classroom Building — DATE: 7/13/2005

		DESCRIPTION	Designer	Enforcement
[X]	131(d)1	For every floor, all interior lighting systems shall be equipped with a separate automatic control to shut off the lighting. This automatic control shall meet the requirements of Section 119 and may be an occupancy sensor, automatic time switch, or other device capable of automatically shutting off the lighting.		
[X]	131(d)2	Override for Building Lighting Shut-off: The automatic building shut-off system is provided with a manual, accessible override switch in sight of the lights. The area of override is not to exceed 5,000 square feet.		
[X]	119(h)	Automatic Control Devices Certified: All automatic control devices specified are certified, all alternate equipment shall be certified and installed as directed by the manufacturer.		
[X]	111	Fluorescent Ballast and Luminaires Certified: All fluorescent fixtures specified for the project are certified and listed in the Directory. All installed fixtures shall be certified.		
[X]	132	Tandem Wiring for One and Three Lamp Fluorescent Fixtures: All one and three lamp fluorescent fixtures are tandem wired with two lamp ballasts where required by Standards Section 132; or all one and three lamp fluorescent fixtures are specified with electronic high-frequency ballasts and are exempt from tandem wiring requirements.		
[X]	131(a)	Individual Room/Area Controls: Each room and area in this building is equipped with a separate switch or occupancy sensor device for each area with floor-to-ceiling walls.		
[X]	131(b)	Uniform Reduction for Individual Rooms: All rooms and areas greater than 100 square feet and more than 0.8 watts per square foot of lighting load shall be controlled with bi-level switching for uniform reduction of lighting within the room.		
[ ]	131(c)	Daylight Area Control: All rooms with windows and skylights that are greater than 250 square feet and that allow for the effective use of daylight in the area shall have 5071616672f the lamps in each daylit area controlled by a separate switch; or the effective use of daylight cannot be accomplished because the windows are continuously shaded by a building on the adjacent lot. Diagram of shading during different times of the year is included on plans.		
[X]	131(f)	Control of Exterior Lights: Exterior mounted fixtures served from the electrical panel inside the building are controlled with a directional photo cell control on the roof and a corresponding relay in the electrical panel, or uses an astronomical time clock.		
[ ]	131(e)	Display Lighting. Display lighting shall be separately switched on circuits that are 20 amps or less.		
[X]	130(c)	Efficacy of Exterior Lights: Exterior mounted fixtures with lamps over 100 Watts served from the electrical panel inside the building have a source efficacy of at least 60 lumens per Watt, or are controlled by a motion sensor.		

EnergyPro 3.1 By EnergySoft User Number: 0000 Job Number: 05152 Page: 38 of 40

LIGHTING COMPLIANCE SUMMARY — Part2 of2 LTG-1

PROJECT NAME: Vallejo Center New Classroom Building — DATE: 7/13/2005

TABLE 1A - PORTABLE LIGHTING NOT SHOWN ON PLANS FOR OFFICE AREAS >250 SQUARE FEET

A ROOM # OR ZONE ID	B DEFAULT (W/sqft)	C AREA (SF)	D TOTAL WATTS (B X C)
TOTAL		0	0

TABLE 1B - PORTABLE LIGHTING SHOWN ON PLANS FOR OFFICE AREAS >250 SQUARE FEET

A ROOM # OR ZONE ID	B PORTABLE LIGHTING Description	# OF FIXT.	C LUMIN. WATTS PER FIXTURE	D TASK AREA (SF)	E # OF TASK AREAS	F TOTAL AREA (SF) (D x E)	G TOTAL WATTS (C x D)
					TOTAL	0	0

TABLE 1C - PLANS SHOW PORTABLE LIGHTING IS NOT REQUIRED FOR OFFICE AREAS > 250 SQUARE FEET

ROOM # OR ZONE ID	TOTAL AREA (SF)
TOTAL	0

Designer needs to provide detailed documentation that the lighting level provided by the overhead lighting meets the needs of the space. The details include luminaire types, CU, and mounting locations relative to work areas.

BUILDING SUMMARY - PORTABLE LIGHTING

BUILDING SUMMARY	TOTAL AREA (SF) (FROM TABLES 1A+1B+1C)	TOTAL WATTS (FROM TABLES 1A+1B)
BUILDING TOTAL	0	0

Run Initiation Time: 07/05/05 16:07:55 Run Code: 1120604875

EnergyPro 3.1 By EnergySoft User Number: 0000 Job Number: 05152 Page: 18 of 40

APPROVAL STAMP
IDENTIFICATION STAMP
DIVISION OF THE STATE ARCHITECT
APPL 02- 107417
AC FLS TH SS NL
DATE: 12/21/05

NO.	ISSUED FOR	DATE
1	DSA APPROVAL SET	12/08/05

REGISTERED PROFESSIONAL ENGINEER — JOSEPH W. KAY — E 10951 — EXP. 6/30/07 — ELECTRICAL — STATE OF CALIFORNIA

Date Signed 12/06/05

CERTIFIED BY

K M D
KAPLAN McLAUGHLIN DIAZ
ARCHITECTURE PLANNING
222 VALLEJO SAN FRANCISCO, CA 94111
(415) 398-5191 FAX (415) 394-7158

ALFATECH
120 MONTGOMERY STREET, SUITE 715 415-403-3000
SAN FRANCISCO, CALIFORNIA 94104 FAX: 415-788-6040
SAN JOSE • NEW JERSEY • SINGAPORE • AUSTRALIA
AT Project No. 204231

SOLANO COMMUNITY COLLEGE

SCCD
VALLEJO CENTER
Contract # A003.6123.01.V1

PROJECT NO. 419-201 — DATE 12-08-05

TITLE 24
COMPLIANCE FORMS
(CONTINUED)
AS BUILTS

E0.03

PLOT DATE:

COPYRIGHT © 2004 BY KMD (KAPLAN McLAUGHLIN DIAZ). ALL RIGHTS RESERVED.

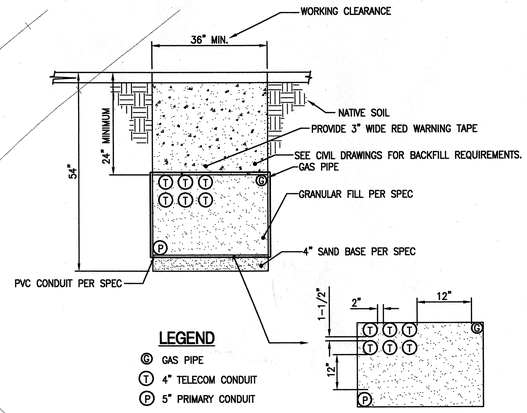

LEGEND

- Ⓖ GAS PIPE
- Ⓣ 4" TELECOM CONDUIT
- Ⓟ 5" PRIMARY CONDUIT

1 JOINT TRENCH DETAIL
NO SCALE

LEGEND

- [T] TELECOM VAULT – 3'x5'x3'-6"
- [E] PG&E PRIMARY ENCLOSURE – 3'x5'x3'-6"
- [P] LOW VOLTAGE POWER PULLBOX – 12"x24"

SHEET NOTES

1. PROVIDE 1"C (POWER) FROM TAMPER SWITCH TO PANEL L1-A IN MAIN ELECTRICAL ROOM. PROVIDE 1"C (FIRE ALARM) FROM TAMPER SWITCH TO MAIN FACP FOR SUPERVISION.
2. PULLBOX TO BE MINIMUM 12"X18" INSIDE DIMENSIONS. UNLESS OTHERWISE REQUIRED BY CODE OR NEEDED TO FACILITATE CABLE INSTALLATION.
3. ~~FINAL DESIGN AND BID TO BE BASED ON PG&E. ENGINEERED SITE DRAWINGS FOR SUBSTRUCTURES AND JOINT TRENCHES.~~
4. PROVIDE (1) 1"C FROM MAIN ELECTRICAL ROOM TO PULLBOX FOR FUTURE CONNECTION TO FUTURE SITE SIGNAGE. ~~6 RFI-043~~
5. PROVIDE (2) 4"C.O. FROM TELECOM PULLBOX AT SERVER ROOM LOCATION TO TELECOM PULLBOX ON WEST SIDE OF BUILDING FOR FUTURE BUILDING USE.

GENERAL NOTES

1. ALL LIGHTING HOMERUNS TO PANEL HB.
2. SWITCHING BY PHOTOCELL LOCATED ON ROOF OF BUILDING A.
3. ELECTRICAL JOINT TRENCH OVER TOP OF STORM DRAIN AND SANITARY SEWER. CONTRACTOR TO POTHOLE AND VERIFY IN FIELD. 1

3 FINAL DESIGN AND BID TO BE BASED ON PG&E ENGINEERED SITE DRAWINGS FOR SUBSTRUCTURES AND JOINT TRENCHES. FOR INITIAL BID, PROVIDE A LINE ITEM BID FOR:
1. SUBSTRUCTURES
2. COST PER LINEAL FOOT (LF) FOR JOINT TRENCH INCLUSIVE OF BENDS
3. SPLIT TRENCHES: SEPARATE TRENCH FOR PG&E AND SBC 1

APPROVAL STAMP — IDENTIFICATION STAMP
DIVISION OF THE STATE ARCHITECT
APP # 92- 107417
AC FLS TH SS AM
DATE: 12/21/05

NO.	ISSUED FOR	DATE
1	DSA APPROVAL SET	12/08/05

REGISTERED PROFESSIONAL ENGINEER — JOSEPH W. [illegible] — E 10951 — EXP. 6/30/07 — ELECTRICAL — STATE OF CALIFORNIA
Date Signed 12/06/05
CERTIFIED BY

K M D
KAPLAN McLAUGHLIN DIAZ
ARCHITECTURE PLANNING
222 VALLEJO SAN FRANCISCO, CA 94111
(415) 398-5191 FAX (415) 394-7158

ALFATECH
120 MONTGOMERY STREET, SUITE 715 415-405-3000
SAN FRANCISCO, CALIFORNIA 94104 FAX 415-788-8040
SAN JOSE • NEW JERSEY • SINGAPORE • AUSTRALIA
ATProject No. 20421

SOLANO COMMUNITY COLLEGE

SCCD
VALLEJO CENTER
Contract # A003.6123.01.V1

PROJECT NO.	DATE
419-201	12-08-05

ELECTRICAL SITE PLAN
AS BUILTS

E1.00

1 E1.0 ELECTRICAL SITE PLAN
SCALE: 1"=30'

PLOT DATE:

COPYRIGHT © 2004 BY KMD (KAPLAN McLAUGHLIN DIAZ). ALL RIGHTS RESERVED.

SHEET NOTES

1. SWITCH 'I' CONTROLS DOWNLIGHTS IN SECOND FLOOR LOBBY.

GENERAL NOTES

1. EXTERIOR BUILDING MOUNTED FIXTURES ARE SHOWN FOR REFERENCE ONLY. REFER TO SHEET E1.0 FOR COMPLETE DESIGN. REFER TO ARCHITECTURAL DRAWINGS FOR EXACT LOCATIONS.

1 E2.11 BUILDING "A" FIRST FLOOR LIGHTING PLAN
1/8"=1'-0"

APPROVAL STAMP
IDENTIFICATION STAMP
DIVISION OF THE STATE ARCHITECT
APPL 02- 107417
AC FLS TH SS NL
DATE: 12/21/05

NO.	ISSUED FOR	DATE
1	DSA APPROVAL SET	12/08/05

REGISTERED PROFESSIONAL ENGINEER
JOSEPH W. WAY
E 10951
EXP. 6/30/07
ELECTRICAL
STATE OF CALIFORNIA

Date Signed 12/06/05
CERTIFIED BY

K M D
KAPLAN McLAUGHLIN DIAZ
ARCHITECTURE PLANNING
222 VALLEJO SAN FRANCISCO, CA 94111
(415) 398-5191 FAX (415) 394-7158

ALFATECH
120 MONTGOMERY STREET, SUITE 715 415-403-3000
SAN FRANCISCO, CALIFORNIA 94104 FAX: 415-788-8040
SAN JOSE • NEW JERSEY • SINGAPORE • AUSTRALIA
AT Project No. 204231

SOLANO
COMMUNITY COLLEGE

SCCD
VALLEJO CENTER
Contract # A003.6123.01.V1

PROJECT NO.	DATE
419-201	12-08-05

BUILDING "A" FIRST FLOOR LIGHTING PLAN
AS BUILTS

E2.11

PLOT DATE:

COPYRIGHT © 2004 BY KMD (KAPLAN McLAUGHLIN DIAZ). ALL RIGHTS RESERVED.

GENERAL NOTES

1. EXTERIOR BUILDING MOUNTED FIXTURES ARE SHOWN FOR REFERENCE ONLY. REFER TO SHEET E1.0 FOR COMPLETE DESIGN. REFER TO ARCHITECTURAL DRAWINGS FOR EXACT LOCATIONS.

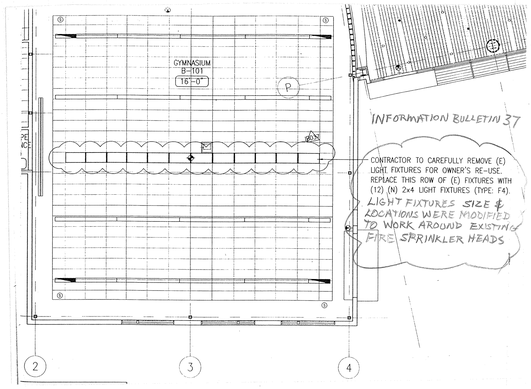

Copy sent by email to: Long Electric on 5/7/07

Ralph Larsen & Son, Inc.
General Contractors License No. 183341
300 8th Avenue
San Mateo, CA 94401-2221
Phone: (650) 579-7339
Fax: (650) 579-0343

Request for Information 294

Detailed, RFIs Grouped by RFI Number

Vallejo Center for Solano Community College Dist
Northgate Business Park
545 Columbus Parkway
Vallejo, CA 94591

Project # 2694
Tel: (707) 649-8327 Fax: (707) 553-9725

Ralph Larsen & Son, Inc.

RFI #: 294 Date Created: 5/7/2007

Answer Company	Answered By	Author Company	Authored By
		Ralph Larsen & Son, Inc. 300 8th Avenue San Mateo, CA 94401	Jay Tucker

Co-Respondent Author RFI Number

Subject: TYPE F3 light fixtures in Room B-103 only have one ballast
Discipline:
Category:

Cc: Company Name Contact Name Copies Notes

Question (Date Required: 5/19/2007)
The TYPE F3 light fixtures in Room B-103 were submitted as F3D. These fixtures only have one ballast for all three lamps. Based upon the submittal data the manufacture only offers 1- 3 lamp ballast for dimming. Each of the TYPE F3D light fixtures will have to be controlled by one 1 (dimming) switch and will not be able to have two switches controlling the TYPE F3D light fixtures in Room B-103. I have attached a modified copy of the light fixtures for Room B-103 showing revised switching for the TYPE F3D light fixtures.
1. Is the revised switching (for lights in Room B-103) shown in the attached sketch acceptable?

Suggestion

Answer (Date Answered: 05/07/07)
Please see attached Sketch for Revised Switching.
Thank you
Andie Pires

Prolog Manager Printed on: 5/7/2007 RALPH Page 1

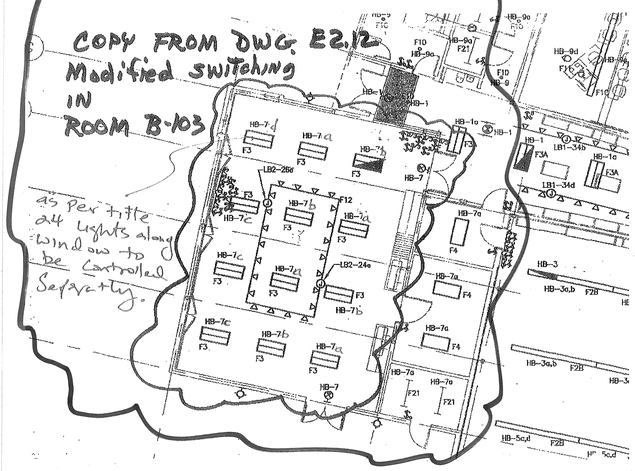

1 E2.12 BUILDING "B" FIRST FLOOR LIGHTING PLAN
1/8"=1'-0"

APPROVAL STAMP
IDENTIFICATION STAMP
DIVISION OF THE STATE ARCHITECT
APPL. 02- 107417
AC FLS SS
DATE: 12/21/05

NO.	ISSUED FOR	DATE
1	DSA APPROVAL SET	12/08/05

REGISTERED PROFESSIONAL ENGINEER JOSEPH W. LONG E 10954 EXP. 6/30/07 ELECTRICAL STATE OF CALIFORNIA
Date Signed 12/06/05
CERTIFIED BY

K M D
KAPLAN McLAUGHLIN DIAZ
ARCHITECTURE PLANNING
222 VALLEJO SAN FRANCISCO, CA 94111
(415) 398-5191 FAX (415) 394-7158

ALFATECH
120 MONTGOMERY STREET, SUITE 715 415-403-3000
SAN FRANCISCO, CALIFORNIA 94104 FAX: 415-788-8040
SAN JOSE • NEW JERSEY • SINGAPORE • AUSTRALIA
AT Project No. 20431

SOLANO COMMUNITY COLLEGE

SCCD
VALLEJO CENTER
Contract # A003.6123.01.V1

PROJECT NO.	DATE
419-201	12-08-05

BUILDING "B" FIRST FLOOR LIGHTING PLAN
AS BUILTS

E2.12

PLOT DATE:

COPYRIGHT © 2004 BY KMD (KAPLAN McLAUGHLIN DIAZ). ALL RIGHTS RESERVED.

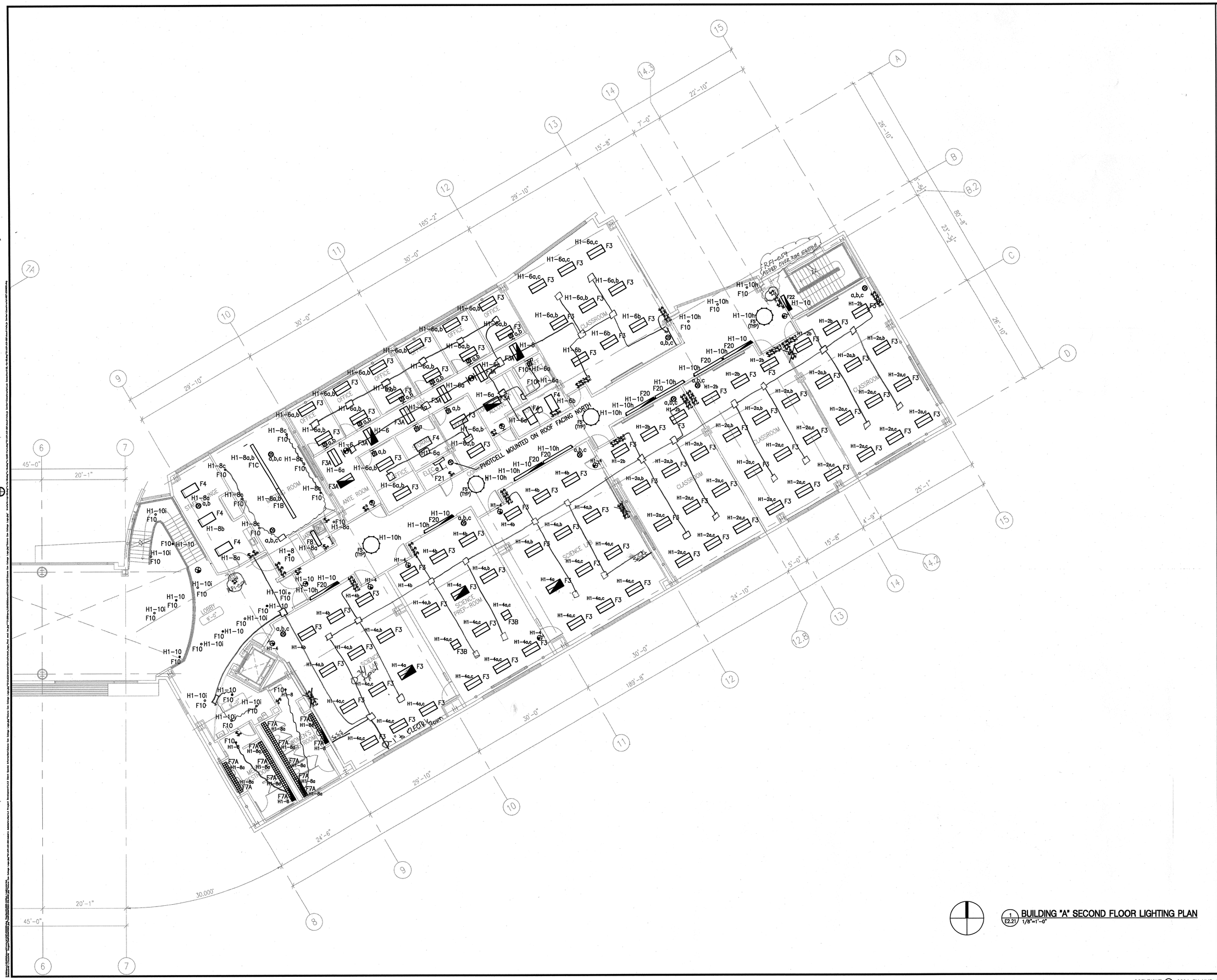

1 E2.21 BUILDING "A" SECOND FLOOR LIGHTING PLAN
1/8"=1'-0"

APPROVAL STAMP
IDENTIFICATION STAMP
DIVISION OF THE STATE ARCHITECT
APPL/02- 107417
ACT FLS TH SS AL
DATE: 12/21/05

NO.	ISSUED FOR	DATE
1	DSA APPROVAL SET	12/08/05

REGISTERED PROFESSIONAL ENGINEER
JOSEPH W. [illegible]
E 10951
EXP. 6/30/07
ELECTRICAL
STATE OF CALIFORNIA
Date Signed 12/06/05
CERTIFIED BY

K M D
KAPLAN McLAUGHLIN DIAZ
ARCHITECTURE PLANNING
222 VALLEJO SAN FRANCISCO, CA 94111
(415) 398-5191 FAX (415) 394-7158

ALFATECH
120 MONTGOMERY STREET, SUITE 715 415-403-3000
SAN FRANCISCO, CALIFORNIA 94104 FAX: 415-788-6040
SAN JOSE • NEW JERSEY • SINGAPORE • AUSTRALIA
AT Project No. 2K021

SOLANO COMMUNITY COLLEGE

SCCD
VALLEJO CENTER
Contract # A003.6123.01.V1

PROJECT NO.	DATE
419-201	12-08-05

BUILDING "A" SECOND FLOOR LIGHTING PLAN

AS BUILTS

E2.21

PLOT DATE:

COPYRIGHT © 2004 BY KMD (KAPLAN McLAUGHLIN DIAZ). ALL RIGHTS RESERVED.

Copy sent by e-mail to: Long Electric on 7-18-06

Ralph Larsen & Son, Inc.
General Contractors License No. 185341
300 8th Avenue
San Mateo, CA 94401-4221
Phone: (650)-579-0139
Fax: (650)-579-0349

Request for Information 056

Detailed, RFIs Grouped by RFI Number

Vallejo Center for Solano Comm. Coll. Dist.
Northgate Business Park
545 Columbus Parkway
Vallejo, CA 94591

Project # 3604
Tel: (707) 649-8327 Fax: (707) 553-9728

Ralph Larsen & Son, Inc.

RFI #: 056 — Date Created: 7/17/2006

Answer Company	Answered By	Author Company	Authored By
		Ralph Larsen & Son, Inc. 300 8th Avenue San Mateo, CA 94401	Jay Tucker

Co-Respondent — Author RFI Number

Subject: Electrical floor boxes and cover types — Discipline — Category

Cc:	Company Name	Contact Name	Copies	Notes

Question — Date Required: 7/28/2006

Reviewed attached RFI-002 from Long Electric.
Based on the plans and specifications, please verify what type/style of floor boxes are to be used for the following areas.
See attached cut sheets for reference. Please assume the following for power boxes only:
660CM1-1 floor box to accommodate one (1) duplex receptacle as shown in the lobby with a #177 brass flange (concrete floor finish) and 828R cover (for power), 828GTTC (for phone/data) 2). Learning Lab A-124 - Wiremold RFR4-CI-1 with S26CCT26S Brass carpet flange cover 3). Server Room A-127A - Same box as item # 1 listed above. In carpeted floor areas use # 8170 covers Please confirm this is correct &/or advise otherwise. Also does the same apply for the 2nd floor?

Suggestion

Answer — Date Answered:

1) Lobby A-100: Wiremold 660CM1-1, brass flange, and 828R cover is correct. Note that floor data outlets are not required in the lobby. Data outlet shown on drawings is intended to be a wireless access point.
2) Learning Lab A-124: Wiremold RFR4-CI-1 is correct
3) Server Room A-127A: Wiremold 660CM1-1 and brass flange is correct. Provide (1) NEMA L5-30R outlet per floor box.
4) AV/ECE B-103: Same as #1 above. Verify flange type (concrete vs. carpet).
5) Meeting Room A-204: Wiremold 660M2, shallow steel box. Provide (1) duplex receptacle and (1) telephone/data port.

Valeria Baldenarnos
Alfa Tech Cambridge Group
07/19/06

Project Manager — Printed on: 7/17/2006 — RALPH

PD/KMD
419-201
07/18/06
1/6

RFI-071
LOCATION OF FLOOR BOXES @ LOBBY

DETAILED FIBER FLOOR FINISH PLAN

RELOCATED PER RFI #73

PANEL L1C, U.O.N.

PANEL L10

MOVED PANEL

PANEL L1D, U.O.N.

PANEL L1B, U.O.N.

PANEL L1B

PANEL L1A, U.O.N.

PANEL L1A

RFI-043A
4'X8' PLYWOOD MOVED TO NORTH WALL.

SEE RFI-056 FOR FLOOR BOX MODEL AND TRIM IN SERVER RM.

IRRIGATION CTRL L1A-32 PER #148

TYPE F-7 COL. FOOTING

RFI-043B
PLYWOOD REMOVED

SHEET NOTES:

1. CEILING MOUNTED DUPLEX RECEPTACLE FOR 120V POWER TO PROJECTOR. PROVIDE (1) 2"C FROM PROJECTOR LOCATION TO SMART PANEL. VERIFY EXACT POWER REQUIREMENTS PRIOR TO ROUGH-IN. (2)
2. JUNCTION BOX FOR 120V CIRCUIT TO ELEVATOR CAB AUXILIARY POWER.
3. JUNCTION BOX FOR 120V POWER TO OVERHEAD COILING GRILLE AT RECEPTION DESK. PROVIDE 3-BUTTON PUSHBUTTON STATION MOUNTED +48"AFF.
4. JUNCTION BOX FOR 120V POWER TO AUTOMATIC SLIDING DOOR. COORDINATE REQUIREMENTS FOR AUXILIARY DEVICES WITH DOOR MANUFACTURER. VERIFY EXACT LOCATION AND POWER REQUIREMENTS PRIOR TO ROUGH-IN.
5. JUNCTION BOX FOR 120V POWER TO SUBWOOFER IN CEILING.
6. NOT USED (5)
7. PROVIDE (1)2"C FROM SMART PANEL TO 6" ABOVE CEILING SPACE. PROVIDE (1)2"C FROM SMART PANEL TO JUNCTION BOX SHOWN.
8. PROVIDE (3) 4"C.O. FROM FIRST FLOOR SERVER ROOM TO SECOND FLOOR IDF ROOM. PROVIDE (2) 4"C.O. FROM SERVER ROOM TO BUILDING B IDF ROOM. VERIFY EXACT LOCATION OF CONDUIT STUBS IN EACH ROOM WITH COLLEGE IT DEPARTMENT.

Ralph Larsen & Son, Inc.
General Contractors License No. 185341
300 8th Avenue
San Mateo, CA 94401-4221
Phone: (650)-579-0139
Fax: (650)-579-0349

Request for Information 076

Detailed, RFIs Grouped by RFI Number

ROUTE OF CONDUITS

Vallejo Center for Solano Community College Dist.
Northgate Business Park
545 Columbus Parkway
Vallejo, CA 94591

Project # 3604
Tel: (707) 649-8327 Fax: (707) 553-9728

Ralph Larsen & Son, Inc.

RFI #: 076 — Date Created: 8/4/2006

Answer Company	Answered By	Author Company	Authored By
		Ralph Larsen & Son, Inc. 300 8th Avenue San Mateo, CA 94401	Jay Tucker

Co-Respondent — Author RFI Number

Subject: Routing of House Telecom conduits between Rooms A127A to B102 — Discipline — Category

Cc:	Company Name	Contact Name	Copies	Notes

Question — Date Required: 8/18/2006

Review attached RFI from Long Electric. Review detail 14/A4.54. The space for containment of the hydronic piping (CHW) MPS 12 and the Fire sprinkler pipe with expansion fittings is limited. We do not believe it will be possible to get all four (4) 4" conduits in the space shown on detail 14/A4.54. Please advise if we can route two conduits in the 2-gang Meeting Room A-204, terminate them in A127A to B102 for telecommunications and in the same trench as the future TELECOM conduit. TELECOM conduits to be routed from A127A to B102 for telecommunications and in the same trench as the future TELECOM conduit. Refer to SHEET NOTE 5 on SHEET NOTE 5.
1. May we use the two (TELECOM) pull boxes shown (on DWG E1.00) for these two TELECOM conduits needed between Room A127A to B102?

Suggestion

Answer — Date Answered:

Proposed solution is acceptable.

Valeria Baldenarnos
Alfa Tech Cambridge
08/08/06

9. PROVIDE (1) 6"C FOR WIRING TO IRRIGATION SYSTEM VALVES. REFER TO SHEET L7.02 FOR LOCATION OF VALVES.
10. PROVIDE RECEPTACLE IN CEILING SPACE FOR CONNECTIONS TO CONDENSATE PUMPS AT UNITS HP-G/1-12 AND HP-H/1-13. (3)
11. (E) (1)2"C FROM SMART PANEL TERMINATING 6" ABOVE CEILING SPACE. PROVIDE (1)2"C FROM SMART PANEL TO JUNCTION BOX SHOWN. PROVIDE MUD RING, ERICO MODEL # MPLST (201826) AND COVERPLATE FOR OPENING AT RING, ERICO MODEL # MPLST (201826) AND COVERPLATE FOR OPENING AT REMOVED SMART PANEL LOCATION AS INDICATED ON ARCHITECTS DRAWINGS. COORDINATE WITH OWNER AND ARCHITECT FOR INSTALLATION.

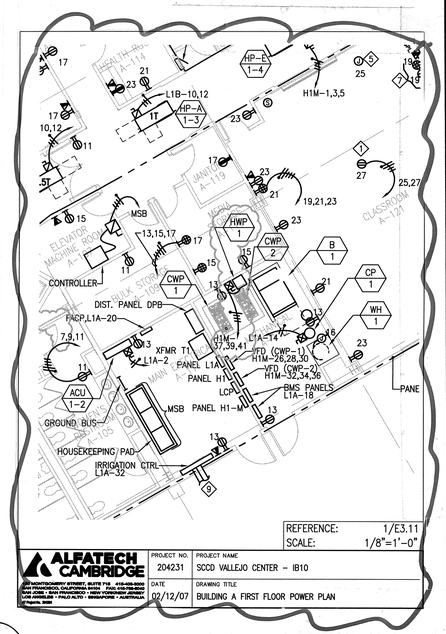

REFERENCE: 1/E3.11
SCALE: 1/8"=1'-0"

ALFATECH CAMBRIDGE

PROJECT NO.	PROJECT NAME
204231	SCCD VALLEJO CENTER – IB10
DATE	DRAWING TITLE
02/12/07	BUILDING A FIRST FLOOR POWER PLAN

1 E3.11 BUILDING "A" FIRST FLOOR POWER PLAN
1/8"=1'-0"

APPROVAL STAMP — IDENTIFICATION STAMP
DIVISION OF THE STATE ARCHITECT
APPL 02- 107417 24
AC ____ FLS ____ SS ____
DATE: ____

NO.	ISSUED FOR	DATE
	IB022	05/4
3	ADDENDUM #4	03/01/
2	ADDENDUM #1	02/03/
1	DSA APPROVAL SET	12/08/

REGISTERED PROFESSIONAL ENGINEER JOSEPH W. FAN E 10951 EXP. 6/30/07 ELECTRICAL STATE OF CALIFORNIA
Date Signed 12/06/05
CERTIFIED BY

K M D
KAPLAN McLAUGHLIN DIAZ
ARCHITECTURE PLANNING
222 VALLEJO SAN FRANCISCO, CA 94111
(415) 398-5191 FAX (415) 394-7179

G:\Cad_Bibliocad\Gen\alfatech_logo_Final small bw.jpg

120 MONTGOMERY STREET, SUITE 710 415-403-3000
SAN FRANCISCO, CALIFORNIA 94104 FAX: 415-788-8040
SAN JOSE • NEW JERSEY • SINGAPORE • AUSTRALIA

AT Project No. 204231

SOLANO COMMUNITY COLLEGE

SCCD
VALLEJO CENTER
Contract # A003.6123.01.V1

PROJECT NO.	DATE
419-201	12-08-05

BUILDING "A" FIRST FLOOR POWER PLAN

AS BUILTS

E3.11

SHEET NOTES:

1. JUNCTION BOX FOR 120V POWER TO PROJECTOR AND PROJECTOR LIFT. PROVIDE (1) 2"C FROM PROJECTOR LOCATION TO SMART PANEL. VERIFY EXACT POWER REQUIREMENTS PRIOR TO ROUGH-IN.
2. JUNCTION BOX FOR 120V POWER TO PROJECTION SCREEN. PROVIDE (1)2"C FROM PROJECTION SCREEN LOCATION TO SMART PANEL. VERIFY EXACT POWER REQUIREMENTS PRIOR TO ROUGH-IN.
3. JUNCTION BOX FOR 120V POWER TO UPWARD ACTING SECTIONAL DOOR. MOTOR LOCATED AT +17'-2"AFF. PROVIDE SWITCH AT +48" AFF. VERIFY EXACT POWER REQUIREMENTS PRIOR TO ROUGH-IN.
4. JUNCTION BOX FOR 120V POWER TO AUTOMATIC DOOR OPERATOR. PROVIDE JUNCTION BOX FOR ACTUATOR. PROVIDE 1/2"C FROM OPERATOR TO ACTUATOR FOR LOW VOLTAGE WIRING.
5. NOT USED.
6. LOCATE SWITCHES FOR PROJECTION SCREEN AND PROJECTOR LIFT ADJACENT TO LIGHTING SWITCHES AT SMART PANEL LOCATION.
7. ~~PROVIDE (1)2"C FROM SMART PANEL TO 6" ABOVE CEILING SPACE. PROVIDE (1)2"C FROM BOTTOM OF SMART PANEL TO QUAD RECEPTACLE.~~
8. PROVIDE (2) 4"C.O. FROM SERVER ROOM TO BUILDING B IDF ROOM. VERIFY EXACT LOCATION OF CONDUIT STUBS IN EACH ROOM WITH COLLEGE IT DEPARTMENT.
9. VERIFY EXACT LOCATION OF ASSISTIVE LISTENING EQUIPMENT PRIOR TO ROUGH-IN OF ELECTRICAL OUTLET. CHANGED TO PORTABLE SYS. (SEE RFI-057) 1/6/06 DELETED FROM CONTRACT 3-28-07 letter FROM FRANK KITCHEN SOLANO DIRECTOR OF FACILITIES RFI-175

F.A.E.P. BUILDING A ONLY

1 (E) (1)2"C FROM SMART PANEL TERMINATING 6" ABOVE CEILING SPACE. PROVIDE (1)2"C FROM SMART PANEL TO JUNCTION BOX SHOWN. PROVIDE MUD RING, ERICO MODEL # MPLST (3018J6) AND COVERPLATE FOR OPENING AT REMOVED SMART PANEL LOCATION AS INDICATED ON ARCHITECTS DRAWINGS. COORDINATE WITH OWNER AND ARCHITECT FOR INSTALLATION.

Copy sent by e-mail to: Long Electric on 7/18-06

Ralph Larsen & Son, Inc.
General Contractors License No. 188341
300 8th Avenue
San Mateo, CA. 94401-4221
Phone: (650) 579-0400
Fax: (650) 579-0404

Request for Information 056

Detailed, RFIs Grouped by RFI Number

Vallejo Center for Solano Comm. Coll. Dist.
Northgate Business Park
545 Columbus Parkway
Vallejo, CA 94591

Project #: 2004
Tel: (707) 649-8327 Fax: (707) 553-9729

Ralph Larsen & Son, Inc.

RFI #: 056

Date Created: 7/17/2006

Answer Company | Answered By | Author Company: Ralph Larsen & Son, Inc. 300 8th Avenue San Mateo, CA. 94401 | Authored By: Jay Tucker

Co-Respondent | Author RFI Number

Subject: Electrical floor boxes and cover types | Discipline | Category

Cc: Company Name | Contact Name | Copies | Notes

Date Required: 7/28/2006

Question
Review attached RFI-002 from Long Electric.
Based on the plans and specifications, please verify what type/style of floor boxes are to be used for the following areas. Please see attached sheets for reference. We assume the following but please confirm:1) Lobby A-100 - Wiremold B80CM1-1 floor box to accommodate one (1) duplex receptacle as shown in the lobby with a # 8177 brass flange (concrete floor finish) and B28R cover (for power), B28GFTC (for phone/data);2) Learning Lab A-124 - Wiremold RFB4-CI-1 with B28CICTCB50 Brass carpet flange cover; 3) Server Room A-127A - Same box as item # 1 listed above. In carpeted floor areas use # 8178 covers.Please confirm this is correct &/or advise otherwise. Also does the same apply for the 2nd floor?

Suggestion

Answer | Date Answered:

1) Lobby A-100: Wiremold B80CM1-1, brass flange, and B28R cover is correct. Note that floor data outlets are not required in the lobby. Data outlet shown on drawings is intended to be a wireless access point.
2) Learning Lab A-124: Wiremold RFB4-CI-1 is correct
3) Server Room A-127A: Wiremold B3CM1-1 and brass flange is correct. Provide (1) NEMA L5-30R outlet per floor box.
4) Art/ECE B-103: Same as #1 above. Verify flange type (concrete vs. carpet).
5) Meeting Room A-204: Wiremold B80M2, shallow steel box. Provide (1) duplex receptacle and (1) telephone/data port.

Valeria Balderramos
Alfa Tech Cambridge Group
07/19/06

PD/KMD 419-201 07/18/06 1/6

Printed on: 7/17/2006 RALPH

RFI-086 THIS SHOULD BE ROUND SYMBOL NOT TRIANGLE

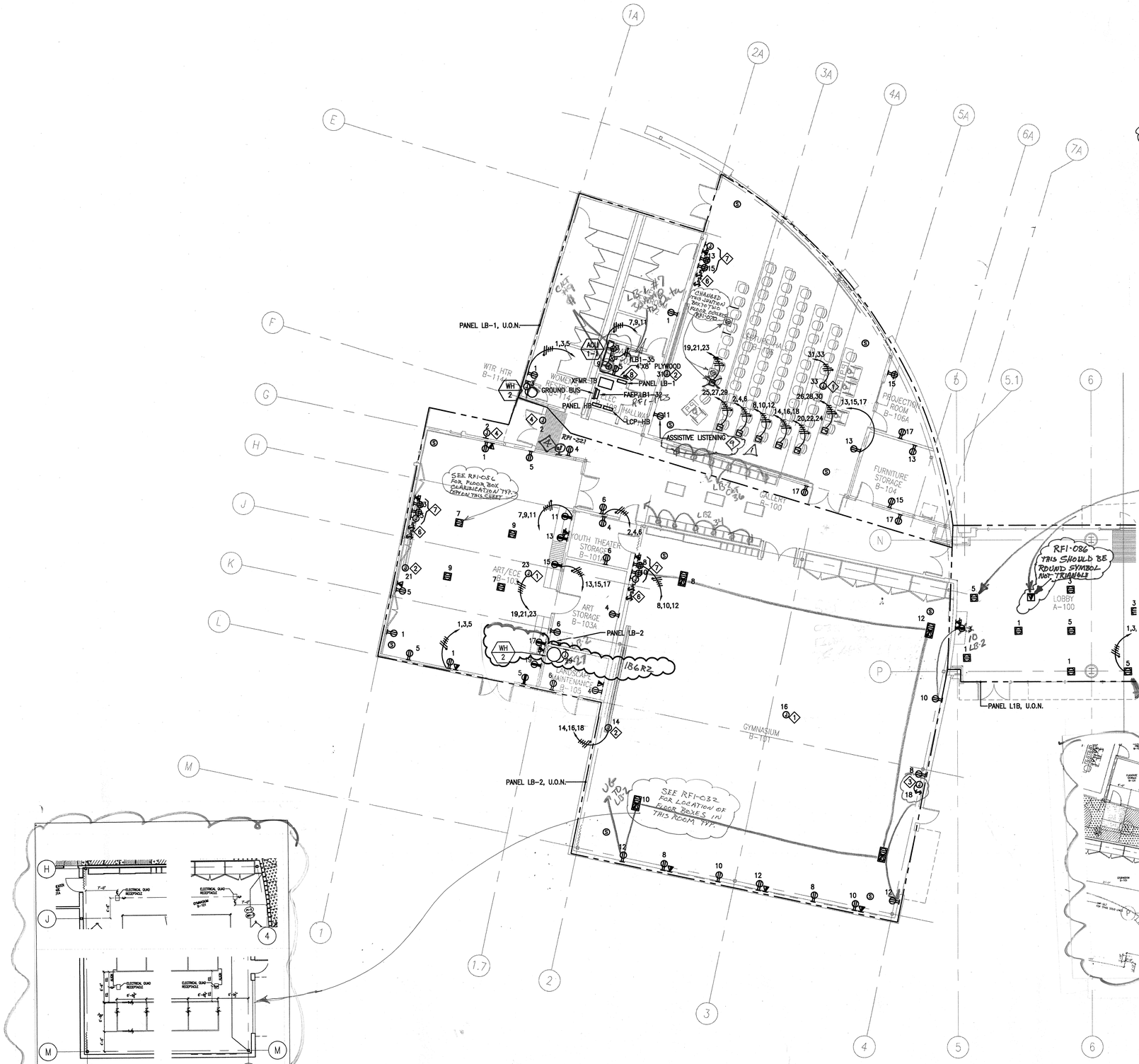

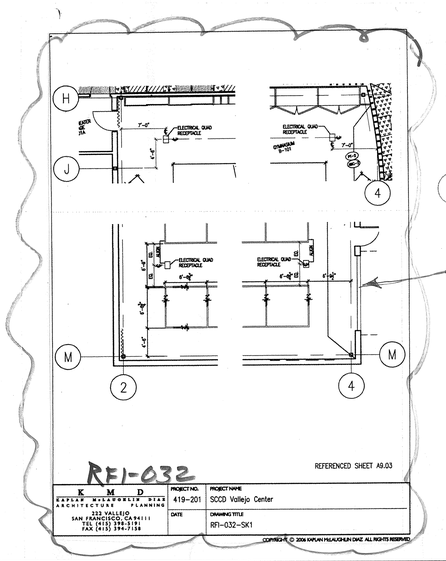

1 E3.12 BUILDING "B" FIRST FLOOR POWER PLAN
1/8"=1'-0"

APPROVAL STAMP
IDENTIFICATION STAMP
DIVISION OF THE STATE ARCHITECT
APPL NO- 107417
AC FLS TH SS NL
DATE: 12/21/05

NO.	ISSUED FOR	DATE
2	IB022	05/24/07
1	ADDENDUM #1	02/03/06
1	DSA APPROVAL SET	12/08/05

REGISTERED PROFESSIONAL ENGINEER JOSEPH M. LONG E 10951 EXP. 6/30/07 ELECTRICAL STATE OF CALIFORNIA
Date Signed 12/06/05
CERTIFIED BY

K M D
KAPLAN McLAUGHLIN DIAZ
ARCHITECTURE PLANNING
222 VALLEJO SAN FRANCISCO, CA 94111
(415) 398-5191 FAX (415) 394-7158

ALFATECH
120 MONTGOMERY STREET, SUITE 715 415-403-3000
SAN FRANCISCO, CALIFORNIA 94104 FAX: 415-788-8040
SAN JOSE • NEW JERSEY • SINGAPORE • AUSTRALIA
AT Project No. 20031

SOLANO COMMUNITY COLLEGE

SCCD
VALLEJO CENTER
Contract # A003.6123.01.V1

PROJECT NO.	DATE
419-201	12-08-05

BUILDING "B" FIRST FLOOR POWER PLAN
AS BUILTS

E3.12

PLOT DATE:

COPYRIGHT © 2004 BY KMD (KAPLAN McLAUGHLIN DIAZ). ALL RIGHTS RESERVED.

SHEET NOTES

1. CEILING MOUNTED DUPLEX RECEPTACLE FOR 120V POWER TO PROJECTOR. PROVIDE (1) 2"C FROM PROJECTOR LOCATION TO SMART PANEL. VERIFY EXACT POWER REQUIREMENTS PRIOR TO ROUGH-IN. (2)
2. JUNCTION BOX FOR SINGLE POINT OF CONNECTION TO FUME HOOD. VERIFY EXACT POWER REQUIREMENTS PRIOR TO ROUGH-IN.
3. DUPLEX RECEPTACLE PROVIDED WITH FUME HOOD.
4. NOT USED.
5. JUNCTION BOX FOR 120V POWER TO SUBWOOFER IN CEILING.
6. LOCATE SWITCH FOR PROJECTION LIFT ADJACENT TO LIGHTING SWITCHES AT SMART PANEL LOCATION.
7. JUNCTION BOX FOR 120V POWER TO PH MONITOR.
8. PEDESTAL DATA/POWER OUTLET MOUNTED TO TOP OF COUNTER.
9. PROVIDE (3) 4"C.O. FROM FIRST FLOOR SERVER ROOM TO SECOND FLOOR IDF ROOM. VERIFY EXACT LOCATION OF CONDUIT STUBS IN EACH ROOM WITH COLLEGE IT DEPARTMENT.
10. (1)2"C FROM SMART PANEL TERMINATING 6" ABOVE CEILING SPACE. PROVIDE (1)2"C FROM SMART PANEL TO JUNCTION BOX SHOWN. PROVIDE MUD RING, ERICO MODEL # MPLST (201826) AND COVERPLATE FOR OPENING AT REMOVED SMART PANEL LOCATION AS INDICATED ON ARCHITECTS DRAWINGS. COORDINATE WITH OWNER AND ARCHITECT FOR INSTALLATION. (3)
11. POWER AND TELE/DATA OUTLETS MOUNTED TO STUDENT LAB BENCH. COORDINATE EXACT LOCATION OF POWER FEED WITH LAB BENCH VENDOR. RUN CONDUIT IN SLAB TO NEAREST WALL AND HOMERUN USING ACCESSIBLE CEILING SPACE.
12. PROVIDE (1)2"C FROM SMART PANEL ON TABLE TO 6" ABOVE CEILING SPACE. PROVIDE (1)2"C FROM SMART PANEL TO JUNCTION BOX IN TABLE AS SHOWN ON DETAIL 3/A9.13. FOR CONDUIT ROUTING SEE SHEET NOTE 11. (3)
13. JUNCTION BOX FOR 120V POWER TO PROJECTOR AND PROJECTOR LIFT. PROVIDE (1) 2"C FROM PROJECTOR LOCATION TO SMART PANEL. VERIFY EXACT POWER REQUIREMENTS PRIOR TO ROUGH-IN.

(4) SEE SHEET NOTE (9) E3.31 (LOCATION OF MOTOR STARTER)

Copy sent by e-mail to: Long Electric on 7-18-06

Ralph Larsen & Son, Inc.
General Contractors License No. 185341
300 9th Avenue
San Mateo, CA 94401-4221
Phone: (650) 579-0339
Fax: (650) 579-0349

Request for Information 056

Detailed, RFIs Grouped by RFI Number

Vallejo Center for Solano Comm. Coll. Dist.
Northgate Business Park
545 Columbus Parkway
Vallejo, CA 94591

Project # 2604
Tel: (707) 649-8327 Fax: (707) 553-9728

Ralph Larsen & Son, Inc.

RFI #: 056
Date Created: 7/17/2006

Answer Company | Answered By | Author Company | Authored By
Ralph Larsen & Son, Inc. | Jay Tucker
300 9th Avenue
San Mateo, CA 94401

Co-Respondent | Author RFI Number

Subject | Discipline | Category
Electrical floor boxes and cover types

Cc: Company Name | Contact Name | Copies | Notes

Question | Date Required: 7/25/2006
Review attached RFI-002 from Long Electric.
Based on the plans and specifications, please verify what type/style of floor boxes are to be used for the following areas.
See attached cut sheets for reference. We assume the following but please confirm:1) Lobby A-100 - Wiremold 880CM1-1 and brass flange is correct. Provide (1) NEMA L5-30R outlet per floor box.2) Learning Lab A-124 - Wiremold 828 w/ 4 617T brass flange (concrete floor finish) and 828R cover (for screed). 828CRTC (for phone/data) 2) Server Room A-127A - Wiremold RFB4-CI-1 with 828CTCBS (brass carpet flange cover.2). Server Room A-127A - Same but same as #1 listed above. In carpeted floor areas use # 617B covers.Please confirm this is correct &/or advise otherwise. Also does the same apply for the 2nd floor?
Suggestion
Answer | Date Answered:
1) Lobby A-100: Wiremold 880CM1-1, brass flange, and 828R cover is correct. Note that floor data outlets are not required in the lobby. Data outlet shown on drawings is intended to be a wireless access point.
2) Learning Lab A-124: Wiremold RFB4-CI-1 is correct.
3) Server Room A-127A: Wiremold 880CM1-1 and brass flange is correct. Provide (1) NEMA L5-30R outlet per floor box.
4) AASECE B-103: Same as #1 above. Verify flange type (concrete vs. carpet).
5) Meeting Room A-204: Wiremold 880M2, shallow steel box. Provide (1) duplex receptacle and (1) telephone/data port.

Valeria Balderramos
Alfa Tech Cambridge Group
07/18/06

PD/KMD 419-2611 07/18/06 1/6

Copy sent by email to: Long Electric on 3/7/07

Ralph Larsen & Son, Inc.
General Contractors License No. 185341
300 9th Avenue
San Mateo, CA 94401-4221
Phone: (650) 579-0339
Fax: (650) 579-0349

Request for Information 233C

Detailed, RFIs Grouped by RFI Number

Vallejo Center for Solano Community College Dist
Northgate Business Park
545 Columbus Parkway
Vallejo, CA 94591

Project # 2604
Tel: (707) 649-8327 Fax: (707) 553-9728

Ralph Larsen & Son, Inc.

RFI #: 233C
Date Created: 1/25/2007

Answer Company | Answered By | Author Company | Authored By
Ralph Larsen & Son, Inc.
300 9th Avenue
San Mateo, CA 94401
Jay Tucker

Co-Respondent | Author RFI Number

Subject | Discipline | Category
PH monitoring location for acid waste sampling tank

Cc: Company Name | Contact Name | Copies | Notes

Question | Date Required: 2/6/2007
The Reply to RFI-233 does not clarify where the PH alarm system is to be mounted. We are concerned that this alarm will not be heard or checked on a regular basis in The Mechanical Room A-113. Note the monitor system only has a 12 feet long cord for connection to the sampling tank. We belive a better location for the alarm panel is in the Science Prep-Room A-209, however we are not sure the wiring can be extended this far from the sampling tank.
1. Where do you want the monitoring alarm panel located.
2. If you want it located above the sink in Room A-209 can the wires be extended beyond the 12 feet long manufactures cable length and still function correctly?
3. Is the suggestion (below) acceptable?

Suggestion
The Contractor to provide conduit, wiring, light, buzzer, relays as needed to provide remote annunciation of the PH MONITOR alarm signals. The remote alarm location is to be near the "S2" SINK shown along GRID LINE 10 in Room A-209. The preferred location for this remote alarm is on the wall at about 60 inches above finish floor between the doorjamb (door A209-B) and the South end of the cabinet at this sink. The Contractor shall provide a lamacoid sign under the remote light and buzzer that reads:

" IF LIGHT IS ON OR IF BUZZER SOUNDS, THE ACID NEUTRALIZATION TANK (located in boiler room) NEEDS IMMEDIATE SERVICE ATTENTION"

Answer | Date Answered:
This is acceptable. Please confirm ASAP please.

D'Arcy Howard / KMD

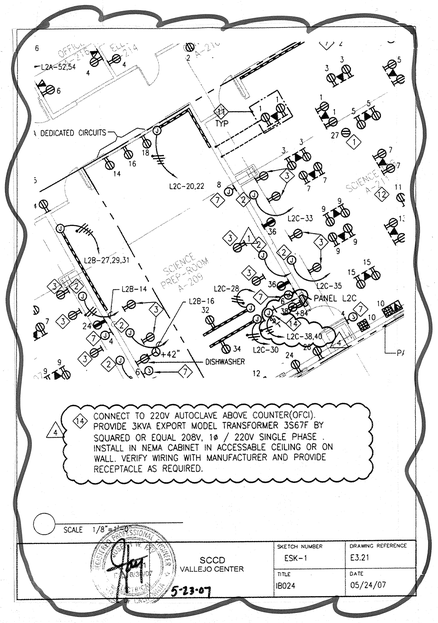

1 E3.21 **BUILDING "A" SECOND FLOOR POWER PLAN**
1/8"=1'-0"

APPROVAL STAMP
IDENTIFICATION STAMP
DIVISION OF THE STATE ARCHITECT
APPL 02- 107417
AC ____ FLS ____ SS ____
DATE: ____

NO.		DATE
3	IB022	05/24/07
2	ADDENDUM #2	03/01/06
1	ADDENDUM #1	02/03/06
1	DSA APPROVAL SET	12/06/05
NO.	ISSUED FOR	DATE

REGISTERED PROFESSIONAL ENGINEER JOSEPH W. FAY E 10951 EXP. 6/30/07 ELECTRICAL STATE OF CALIFORNIA
Date Signed 12/06/05
CERTIFIED BY

K M D
KAPLAN McLAUGHLIN DIAZ
ARCHITECTURE PLANNING
222 VALLEJO SAN FRANCISCO, CA 94111
(415) 398-5191 FAX (415) 394-7158

G:\CadLib\blocks\Gen\alfatech_logo_Final small bw.jpg

120 MONTGOMERY STREET, SUITE 715 415-403-3000
SAN FRANCISCO, CALIFORNIA 94104 FAX: 415-788-8040
SAN JOSE • NEW JERSEY • SINGAPORE • AUSTRALIA
AT Project No. 20421

SOLANO COMMUNITY COLLEGE

SCCD
VALLEJO CENTER
Contract # A003.6123.01.V1

PROJECT NO.	DATE
419-201	12-08-05

BUILDING "A" SECOND FLOOR POWER PLAN

AS BUILTS

E3.21

PLOT DATE:

COPYRIGHT © 2004 BY KMD (KAPLAN McLAUGHLIN DIAZ). ALL RIGHTS RESERVED.

GENERAL NOTES

1. NO CONDUIT HORIZONTAL ROUTING PERMITTED ON ROOF. PENETRATE ROOF FROM SPACE BELOW TO LOCATION OF DEVICE OR MOTOR. SMALL SECTIONS OF HORIZONTAL CONDUIT ARE PERMITTED WHERE LOCAL TO THE EQUIPMENT SERVED.

2. USE LIQUIDTIGHT FLEXIBLE METAL CONDUIT FOR FINAL CONNECTION TO EQUIPMENT. MAXIMUM LENGTH OF LIQUIDTIGHT FLEXIBLE METAL CONDUIT: 6 FEET. SUPPORT PER NEC ARTICLE 350 AT 4-1/2 FT. INTERVALS AND WITHIN 12 INCHES OF EACH OUTLET.

3. MOUNT DISCONNECT SWITCHES, RECEPTACLES, AND OTHER DEVICES FREE AND INDEPENDENT OF MECHANICAL EQUIPMENT HOUSINGS. WHERE ALL OF THE FOLLOWING CONDITIONS APPLY THE DISCONNECT MAY BE MOUNTED TO THE MECHANICAL EQUIPMENT SERVED FROM THAT SWITCH:
   * WHERE APPROVED BY THE MECHANICAL CONTRACTOR
   * WHERE APPROVED BY THE AHJ
   * WHERE THE LOCATION PROVIDES FREE AND CLEAR FRONT ACCESS TO DEVICES AND SWITCHES FOR SERVICE AND USE
   * WHERE THE LOCATION DOES NOT INHIBIT ACCESS TO MECHANICAL EQUIPMENT FOR SERVICE, INSPECTION, AND OPERATION
   * WHERE AIR FLOW PATHS ARE NOT OBSTRUCTED

4. ALL ROOF PENETRATIONS TO BE PERFORMED BY LICENSED ROOFING CONTRACTOR. COORDINATE ROOF PENETRATION AND FLASHING.

5. CONSTRUCTION OF ROOF SUPPORTS (SLEEPERS) FOR SMALL RUNS OF HORIZONTAL CONDUIT: BY LICENSED ROOFING CONTRACTOR AND ATTACHED TO THE ROOF STRUCTURE. SECURE CONDUIT TO SUPPORTS AT CODE REQUIRED INTERVALS

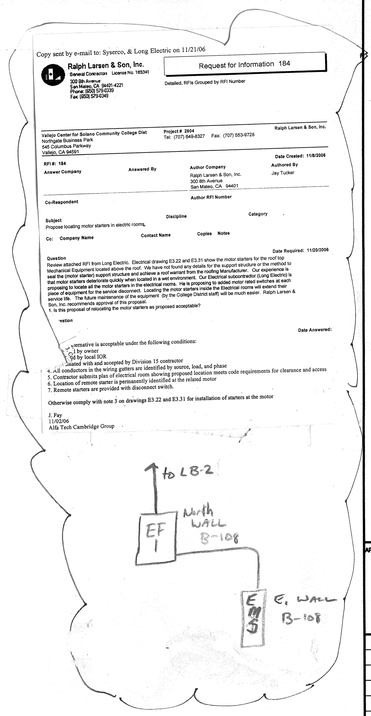

Copy sent by e-mail to: Syserco, & Long Electric on 11/21/06

Ralph Larsen & Son, Inc.
General Contractor License No. 185240
320 6th Avenue
San Mateo, CA 94401-4221
Tel: (650) 579-0239
Fax (650) 579-0240

Request for Information 184

Detailed, RFIs Grouped by RFI Number

Vallejo Center for Solano Community College Dist
Northgate Business Park
545 Columbus Parkway
Vallejo, CA 94591

Project # 3604
Tel: (707) 644-8227 Fax: (707) 553-9726

Ralph Larsen & Son, Inc.

RFI #: 184
Answer Company

Answered By

Author Company
Ralph Larsen & Son, Inc.
320 6th Avenue
San Mateo, CA 94401

Date Created: 11/8/2006
Authored By
Jay Tucker

Co-Respondent

Author RFI Number

Subject
Propose locating motor starters in electric rooms.

Discipline

Category

Cc: Company Name

Contact Name Copies Notes

Date Required: 11/20/2006

Question
Review attached RFI from Long Electric. Electrical drawing E3.22 and E3.31 show the motor starters for the roof top Mechanical Equipment located above the roof. We have not found any details for the support structure or the method to seal the penetrations for this structure and achieve a roof warrant from the roofing Manufacturer. Our experience is that motor starters deteriorate quickly when located in a wet environment. Our Electrical subcontractor has proposed to locate all the motor starters in the electrical rooms. He is proposing to added interposed switches at each piece of equipment for the service disconnect. Locating the motor starters in the electrical rooms will extend their service life. The future maintenance of the equipment (by the College District staff) will be much easier. Ralph Larsen & Son, Inc recommends approval of this proposal.
1. Is this proposal of relocating the motor starters as proposed acceptable?

ration

Date Answered:

ternative is acceptable under the following conditions:
1 by owner
3d by local IOR.
ained with and accepted by Division 15 contractor
4. All conductors in the wiring gutters are identified by source, load, and phase
5. Contractor submits plan of electrical room showing proposed location meets code requirements for clearance and access
6. Location of remote starter is permanently identified at the related motor
7. Remote starters are provided with disconnect switch.

Otherwise comply with note 3 on drawings E3.22 and E3.31 for installation of starters at the motor

J. Fay
11/20/06
AlfaTech Cambridge Group

to LB-2
EF 1
North WALL B-108
E. WALL B-108

1 E3.22 BUILDING "B" ROOF POWER PLAN
1/8"=1'-0"

APPROVAL STAMP
IDENTIFICATION STAMP
DIVISION OF THE STATE ARCHITECT
APP. 02- 107417
AC. FLS. SS.
DATE: 12/21/05

NO.	ISSUED FOR	DATE
1	DSA APPROVAL SET	12/08/05

REGISTERED PROFESSIONAL ENGINEER
JOSEPH M. FAY
No. E 18951
EXP. 6/30/07
ELECTRICAL
STATE OF CALIFORNIA

Date Signed 12/06/05
CERTIFIED BY

K M D
KAPLAN McLAUGHLIN DIAZ
ARCHITECTURE PLANNING
222 VALLEJO SAN FRANCISCO, CA 94111
(415) 398-5191 FAX (415) 394-7158

ALFATECH
120 MONTGOMERY STREET, SUITE 715 415-403-3000
SAN FRANCISCO, CALIFORNIA 94104 FAX: 415-788-9040
SAN JOSE • NEW JERSEY • SINGAPORE • AUSTRALIA
AT Project No. 21231

SOLANO COMMUNITY COLLEGE

SCCD
VALLEJO CENTER
Contract # A003.6123.01.V1

PROJECT NO.	DATE
419-201	12-08-05

BUILDING "B" ROOF POWER PLAN
AS BUILTS

E3.22

PLOT DATE:

COPYRIGHT © 2004 BY KMD (KAPLAN McLAUGHLIN DIAZ). ALL RIGHTS RESERVED.

SHEET NOTES

1. VFD PROVIDED BY DIVISION 15, INSTALLED BY DIVISION 16.
2. PROVIDE (2) STRIPLIGHTS, (1) MOUNTED TO TOP OF ENCLOSURE AND (1) MOUNTED AT BASE OF ENCLOSURE. REFER TO DETAIL 1, SHEET A6.21 FOR EXACT LOCATION. FIXTURES TO BE LITHONIA LIGHTING, S SERIES, (1) 32W T8, 4100K LAMP, 277V. FIXTURE TO BE CONTROLLED VIA PHOTOCELL.
3. MOTOR STARTER LOCATED 2ND FL. RM A-214 ELEC. RM.

GENERAL NOTES

1. NO CONDUIT HORIZONTAL ROUTING PERMITTED ON ROOF. PENETRATE ROOF FROM SPACE BELOW TO LOCATION OF DEVICE OR MOTOR. SMALL SECTIONS OF HORIZONTAL CONDUIT ARE PERMITTED WHERE LOCAL TO THE EQUIPMENT SERVED.
2. USE LIQUIDTIGHT FLEXIBLE METAL CONDUIT FOR FINAL CONNECTION TO EQUIPMENT. MAXIMUM LENGTH OF LIQUIDTIGHT FLEXIBLE METAL CONDUIT: 6 FEET. SUPPORT PER NEC ARTICLE 350 AT 4-1/2 FT. INTERVALS AND WITHIN 12 INCHES OF EACH OUTLET.
3. MOUNT DISCONNECT SWITCHES, RECEPTACLES, AND OTHER DEVICES FREE AND INDEPENDENT OF MECHANICAL EQUIPMENT HOUSINGS. WHERE ALL OF THE FOLLOWING CONDITIONS APPLY THE DISCONNECT MAY BE MOUNTED TO THE MECHANICAL EQUIPMENT SERVED FROM THAT SWITCH:
   - WHERE APPROVED BY THE MECHANICAL CONTRACTOR
   - WHERE APPROVED BY THE AHJ
   - WHERE THE LOCATION PROVIDES FREE AND CLEAR FRONT ACCESS TO DEVICES AND SWITCHES FOR SERVICE AND USE
   - WHERE THE LOCATION DOES NOT INHIBIT ACCESS TO MECHANICAL EQUIPMENT FOR SERVICE, INSPECTION, AND OPERATION
   - WHERE AIR FLOW PATHS ARE NOT OBSTRUCTED
4. ALL ROOF PENETRATIONS TO BE PERFORMED BY LICENSED ROOFING CONTRACTOR. COORDINATE ROOF PENETRATION AND FLASHING.
5. CONSTRUCTION OF ROOF SUPPORTS (SLEEPERS) FOR SMALL RUNS OF HORIZONTAL CONDUIT: BY LICENSED ROOFING CONTRACTOR AND ATTACHED TO THE ROOF STRUCTURE. SECURE CONDUIT TO SUPPORTS AT CODE REQUIRED INTERVALS

Copy sent by e-mail to: Syserco, & Long Electric on 11/21/06

Ralph Larsen & Son, Inc.
General Contractor License No. 185341
332 Bth Avenue
San Mateo, CA 94401-4221
Phone (650) 579-0239
Fax (650) 579-0349

Request for Information 184

Detailed, RFIs Grouped by RFI Number

Vallejo Center for Solano Community College Dist
Northgate Business Park
545 Columbus Parkway
Vallejo, CA 94591

Project # 3904
Tel: (707) 649-8327 Fax: (707) 563-9728

Ralph Larsen & Son, Inc.

RFI #: 184 Date Created: 11/8/2006

Answer Company | Answered By | Author Company: Ralph Larsen & Son, Inc. 332 8th Avenue San Mateo, CA 94401 | Authored By: Jay Tucker

Co-Respondent | Author RFI Number

Subject | Discipline | Category
Propose locating motor starters in electric rooms,

Cc: Company Name | Contact Name | Copies | Notes

Question | Date Required: 11/09/2006
Review sht dtail RFI from Long Electric. Electrical drawing E3.22 and E3.31 show the motor starters for the roof top equipment located above the roof. We have not found any details for the support structure or the method to seal the motor starter support structure and achieve a roof warrant from the roofing Manufacturer. Our experience is that motor starters deteriorate quickly when located in a wet environment. Our Electrical subcontractor (Long Electric) is proposing to locate all the motor starters in the electrical rooms. He is proposing to added motor rated switches at each piece of equipment for the service disconnect. Locating the motor starters inside the Electrical rooms will extend their service life. The future maintenance of the equipment. By the College District staff) will be much easier. Ralph Larsen & Son, inc recommends approval of this proposal.
1. Is this proposal of relocating the motor starters as proposed acceptable?

Suggestion

Answer | Date Answered:
Proposed alternative is acceptable under the following conditions:
1. Approved by owner
2. Approved by local IOR
3. Coordinated with and accepted by Division 15 contractor
4. All conductors in the wiring gutters are identified by source, load, and phase
5. Contractor submits plan of electrical room showing proposed location meets code requirements for clearance and access
6. Location of remote starter is permanently identified at the related motor
7. Remote starters are provided with disconnect switch.

Otherwise comply with note 3 on drawings E3.22 and E3.31 for installation of starters at the motor

J. Fey
11/02/06
Alfa Tech Cambridge Group

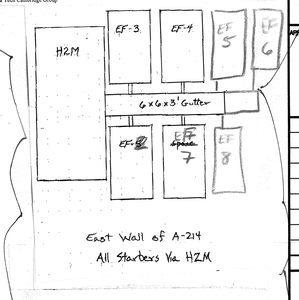

East Wall of A-214
All Starters Via H2M

1 E3.31 BUILDING "A" ROOF POWER PLAN
1/8"=1'-0"

APPROVAL STAMP
IDENTIFICATION STAMP
DIVISION OF THE STATE ARCHITECT
APPL NO: 107417
ACC FLS TH SS NL
DATE: 12/21/05

NO.	ISSUED FOR	DATE
1	DSA/APPROVAL SET	12/08/05

REGISTERED PROFESSIONAL ENGINEER JOSEPA W. LONG No. E 10957 EXP. 6/30/07 ELECTRICAL STATE OF CALIFORNIA
Date Signed 12/06/05
CERTIFIED BY

K M D
KAPLAN McLAUGHLIN DIAZ
ARCHITECTURE PLANNING
222 VALLEJO SAN FRANCISCO, CA 94111
(415) 398-5191 FAX (415) 394-7158

ALFATECH
120 MONTGOMERY STREET, SUITE 710 415-403-3000
SAN FRANCISCO, CALIFORNIA 94104 FAX: 415-788-8040
SAN JOSE • NEW JERSEY • SINGAPORE • AUSTRALIA
Alfa Project No. 20431

SOLANO COMMUNITY COLLEGE

SCCD
VALLEJO CENTER
Contract # A003.6123.01.V1

PROJECT NO.	DATE
419-201	12-08-05

BUILDING "A" ROOF POWER PLAN

AS BUILTS

E3.31

PLOT DATE:

COPYRIGHT © 2004 BY KMD (KAPLAN McLAUGHLIN DIAZ). ALL RIGHTS RESERVED.

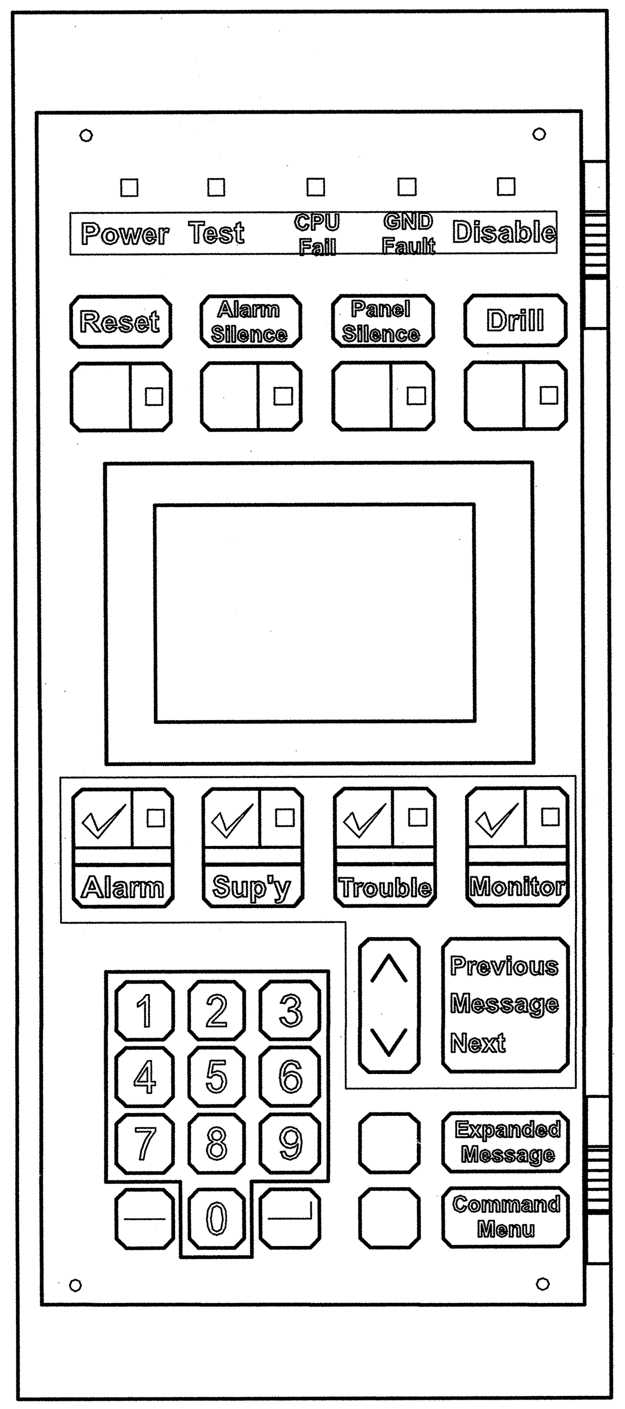

3-LCD DISPLAY
NO SCALE

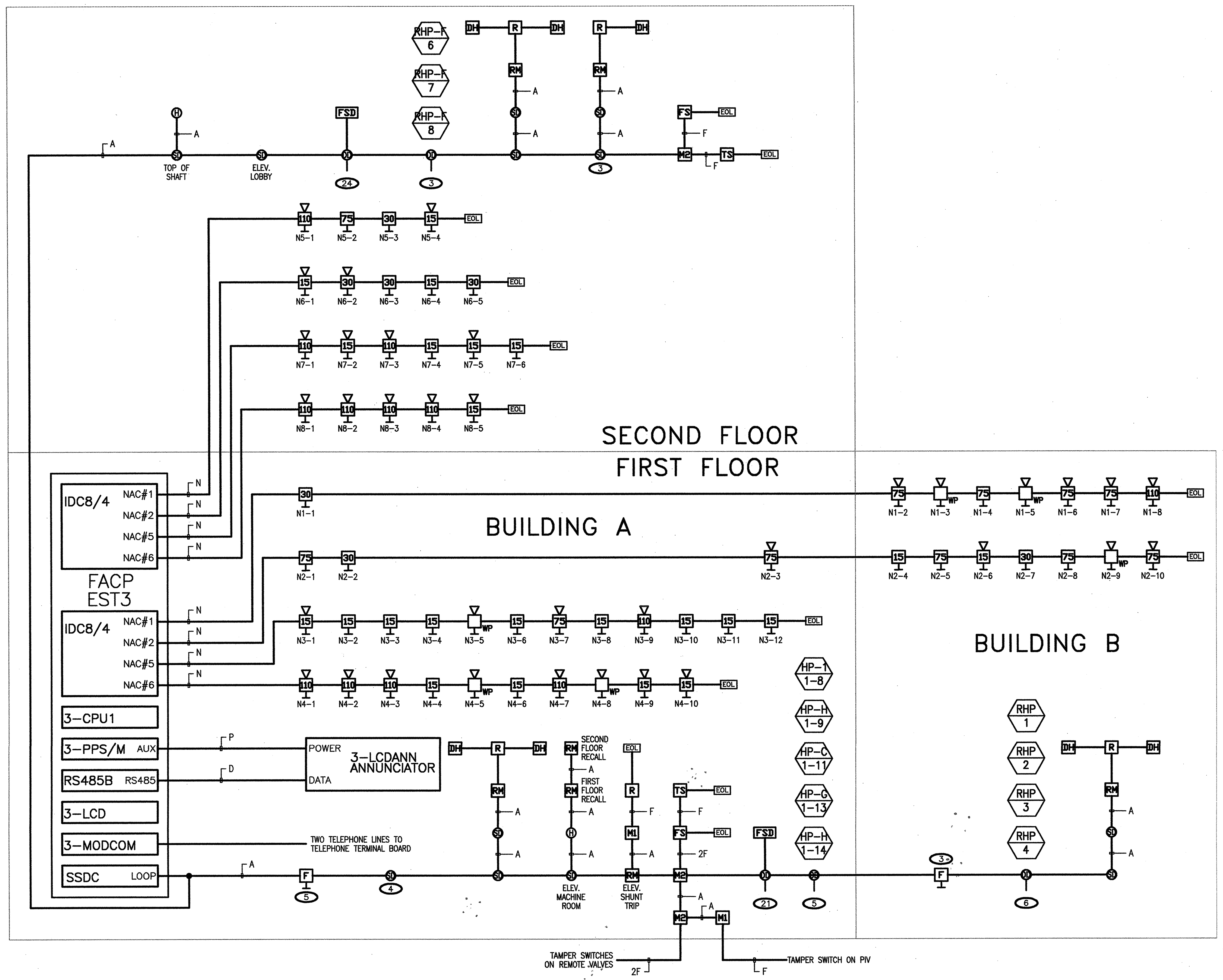

ONE-LINE DIAGRAM
NO SCALE

(##) = NUMBER OF IDENTICAL DEVICES OR CIRCUITS

NOTE: THIS ONE-LINE DIAGRAM SHOWS ACTUAL CIRCUIT LAYOUT, NOT CONDUIT ROUTING. REFER TO FLOOR PLAN FOR CONDUIT ROUTING REQUIREMENTS.

1. The fire alarm system shall conform to the following codes:
   - 2001 California Building Code (Part 2, Title 24)
   - 2001 California Electrical Code (Part 3, Title 24)
   - 2001 California Fire Code (Part 9, Title 24)
   - 1999 NFPA 72 National Fire Alarm Code
2. Installation of the fire alarm system shall not be started until detailed specifications including California State Fire Marshal listing numbers voltage drops and battery calculations for each component of the system have been approved by DSA, the Authority Having Jurisdiction (AHJ).
3. Upon completion of the installation of the fire alarm system, a satisfactory test of the entire system shall be made in the presence of the AHJ and the project's inspector of record.
4. Exact locations and heights of all devices to be verified by Architect.
5. Penetrations of fire-rated walls shall be protected in accordance with California Building Code, Title 24, Part 2, Chapter 7.
6. All conduits 1/2" minimum UON. All underground conduits 1" minimum UON. All cable shall be in conduit.
7. "Cut-in" type electrical boxes are not acceptable. Provide as shown in Symbol Legend.
8. Absolutely no underground splices allowed! Underground and exterior conduits to have water-tight fittings.
9. Leave the following cable tails:
   a. 10' at terminal cabinets and control panels
   b. 25' at terminal boards
   c. 2' at all devices.
10. All splices and terminations shall meet code and manufacturer system requirements.
11. All conductors are to be clearly labeled. Labeling shall be distinct and shall occur at both ends of cable. Do not label any two cables with the same number or marking.
12. Fire alarm circuit classes and styles:
   - IDC = Class-B, Style-B
   - SLC = Class-B, Style-4
   - NAC = Class-B, Style-Y
13. Mounting heights:
   - Fire Alarm Box: 48" to center line of device from finished floor.
   - Audible: Where ceiling heights allow, top of appliance shall not be less than 90" above finished floor and not less than 6" below finished ceilings (NFPA 72 4-3.5.1).
   - Visual and Audible/Visual: The entire lens shall not be less than 80" and not greater than 96" above finished floor (NFPA 72 4-4.4).
14. Do not locate heat and smoke detectors within 3' of any air register (supply or return). Verify exact locations in field.
15. All fire alarm audible signals are to be similar in sound and pattern, sounding the California Uniform Fire Alarm Signal. Audible signal levels shall be at least 15dBA above the ambient sound level but not less than 75dBA at 10' or more than 110dBA at minimum hearing distance (Public mode, NFPA 72 4-3.2.1, 4-3.2.2). Exterior horns to be set at "high" (98dBA).
16. Visual appliances shall not exceed two flashes per second and nor be less than one flash every second (NFPA 72 4-4.2). Visual appliances must be synchronized in areas where more than two appliances are in the same room or in an adjacent space within the field of view (NFPA 72 4-4.4.1(4)).
17. Provide (1) dedicated 120V 20A circuit at the Fire Alarm Control Panel(FACP).
18. A 4-pair Category-3 (minimum) telco cable shall be pulled between FACP and telephone company demarcation point. Two telephone lines (provided by customer) shall be interfaced with the FACP via two RJ-31X modules (located at FACP). The lines shall be interfaced at the demarcation point such that the FACP is the first piece of equipment in the circuit.

Copy sent by e-mail to: Long Electric on 11/6/06

Ralph Larsen & Son, Inc.
General Contractors License No. 189341
300 8th Avenue
San Mateo, CA 94401-4221
Phone: (650) 579-0339
Fax: (650) 579-0349

Request for Information 105

Detailed, RFIs Grouped by RFI Number

Revised 11/6/06

Vallejo Center for Solano Community College Dist
Northgate Business Park
545 Columbus Parkway
Vallejo, CA 94591

Project # 2604
Tel: (707) 649-8327 Fax: (707) 553-9728

Ralph Larsen & Son, Inc.

RFI #: 105 Date Created: 8/30/2006

Answer Company | Answered By | Author Company: Ralph Larsen & Son, Inc., 300 8th Avenue, San Mateo, CA 94401 | Authored By: Jay Tucker

Co-Respondent | Author RFI Number

Subject: Duct detectors can not handle 120-volt Fire Smoke Dampers | Discipline | Category

Cc: Company Name | Contact Name | Copies | Notes

Question | Date Required: 9/11/2006

Review attached RFI from Long Electric. Section 15820-6, 2.06, F, 5 requires us to provide 115 V single phase, 60 HZ motors. The relay board on the Specified Duct Smoke detectors are not rated for 115 (or 120) volts. The Specified Duct Detectors will not be able to control the Fire Smoke Dampers. An addressable control relay will need to be added at each Fire Smoke Damper. It may be necessary to add addressable control relays for AC fan shut down also. The Contract drawings do not show the addressable control relays.
1. Do you want us to added addressable relays at the duct detectors as CHANGE ORDER WORK?
2. If the answer to question #1 is no, how do you want to resolve the conflict between the voltage of the Fire Smoke Dampers and the duct smoke detectors?

Suggestion

Answer | Date Answered:

Please provide (1) relay per floor as recommended by DFP (email from Scott Baldocchi dated 10/25/06) so that all FSD's will be controlled as a whole on each floor.

Valeria Balderramos
11/06/06
Alfa Tech Cambridge Group

FIRE ALARM SEQUENCE OF OPERATION

Result of Operation	Man. Pull Station	Smoke Detector	Heat Detector	Duct Detector	Sprinkler Flow	Tamper Switch	Power Loss	Single Open	Single Ground	Wire-To-Wire Short (IDC)	Wire-To-Wire Short (SLC)	Wire-To-Wire Short (NAC)
Annunciate Alarm	X	X	X	X	X	X note 3				X		
Annunciate Trouble							X	X	X		X	X
Report to Monitoring Co.	X note 1	X note 1	X note 1	X note 1	X note 1	X note 3	X note 2	X note 2	X note 2	X note 1	X note 2	X note 2
Audible Alarm	X	X	X	X	X					X		
Visual Alarm	X	X	X	X	X					X		
Shutdown HVAC				X note 4								
Close F/S Damper				X note 4			X note 5					
Door Release		X note 6										

Notes:
1. General Alarm.
2. Trouble.
3. Supervisory Alarm.
4. In response to associated duct smoke detector.
5. Fire/smoke dampers close upon loss of power.
6. Activation of smoke detector on either side of door.

NOTE: ONLY OPERATIONS IN SCOPE OF THIS PROJECT SHOWN.

CABLE LEGEND

A. West Penn 971 – Indoor Signaling Line Circuit (SLC)
D. West Penn D975 – Shielded Data Cable
F. (2) #14 THWN (wh,gn) – Initiating Device Circuit (IDC)
N. (2) #12 THWN (bu,bn) – Notification Appliances (NAC)
P. (2) #12 THWN (bk,rd) – 24 VDC Power

FIRE ALARM SYSTEM MONITORING NOTE

AUTOMATIC FIRE ALARM SYSTEMS SHALL TRANSMIT ALARM, SUPERVISORY AND TROUBLE SIGNALS TO AN APPROVED SUPERVISING STATION, AS REQUIRED BY NFPA 72, AND AMMENDED BY ARTICLE 91. THE SUPERVISING STATION SHALL BE LISTED AS EITHER UUFX OR UUJS BY UNDERWRITERS LABORATORY OR SHALL MEET THE REQUIREMENTS OF FACTORY MUTUAL RESEARCH STANDARD 3011. SUPERVISION OF THE SYSTEM AND LEASING OF TELEPHONE LINES SHALL BE ARRANGED BY THE OWNER.

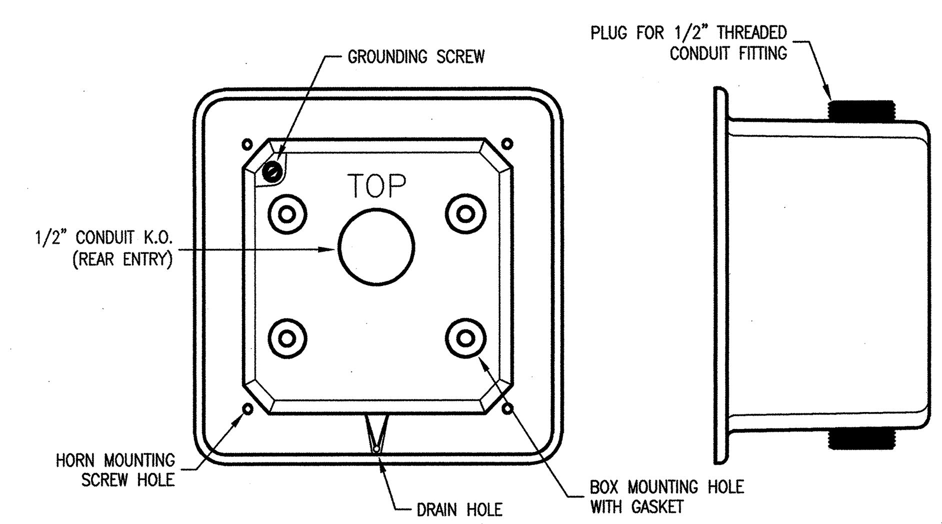

FRONT VIEW SIDE VIEW

NOTES:

1. Orient backbox so that "TOP" is toward the top. This allows any accumulated moisture to drain via the drain hole.
2. Backbox is a surface mounted device. Use the appropriate fastener to mount the backbox. Use the four (4) mounting holes with gaskets to ensure a waterproof seal.
3. Only use the conduit entrances already supplied with backbox. Seal the conduit entrance using exterior caulking or thread sealing tape.
4. Save supplied gasket for installation when horn is installed.
5. If required by code, ground backbox with a reliable ground source using the grounding screw provided with the backbox.
6. ELECTRICAL CONTRACTOR IS RESPONSIBLE FOR MOUNTING BACKBOX CORRECTLY IN LOCATION REQUIRED. ANY DISCREPANCY THAT VIOLATES CODE REQUIREMENTS SHALL BE THE SOLE RESPONSIBILITY OF THE ELECTRICAL CONTRACTOR.

757A-WB WEATHERPROOF BACKBOX DETAIL
1/2" = 1"

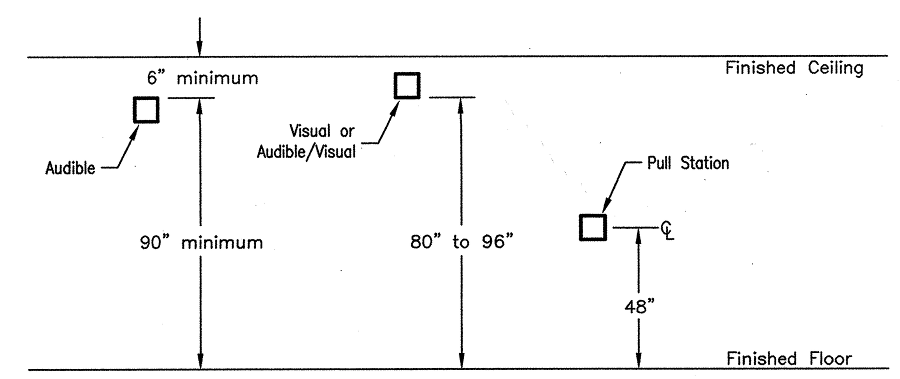

AUDIBLE APPLIANCES: Where ceiling heights allow, top of appliance shall not be less than 90" above finished floor and not less than 6" below finished ceilings (NFPA 72 4-3.5.1). Where audible appliances are combined with visual, the requirements for visual appliances shall take precedence.

VISUAL & AUDIBLE/VISUAL APPLIANCES: The entire lens shall not be less than 80" and not greater than 96" above finished floor (NFPA 72 4-4.4).

FIRE ALARM BOXES: Fire alarm boxes shall be mounted at 48" above finished floor to center of devices.

FIRE ALARM HEIGHT DETAIL
NO SCALE

SYMBOL LEGEND

SYMBOL	MANUFACTURER	MODEL	BACKBOX	DESCRIPTION
FACP	EST	EST3	3-RCC14R	Fire Alarm Control Panel 7165-1591:186
ANN	EST	3-LCDANN	RLCM/B flush mount	Annunciator Panel 7120-1591:193
F	EST	SIGA-270	4"sq. deep & 1-gang ring	Addressable Manual Alarm Box 7150-1591:129
SD	EST	SIGA-IPHS SIGA-SB	 4"sq. deep & 3" O-ring	Ion & Photoelectric Smoke Detector 7272-1591:123 Detector Base 7300-1591:120
H	EST	SIGA-HRS SIGA-SB	 4"sq. deep & 3" O-ring	Heat Detector 7272-1591:125 Detector Base 7300-1591:120
DD	EST	SIGA-SD (includes sampling tube)		Duct Smoke Detector 3242-1591:223
WP	EST	757-1A-T	757A-WB (7135-1591:191)	Exterior Horn 7135-1591:188
CD (horn/strobe)	EST	G1RF-HDVM	4"sq. deep & 1-gang ring	Horn/Strobe, CD = candela rating 7125-1591:202
CD (strobe)	EST	G1RF-VM	4"sq. deep & 1-gang ring	Strobe, CD = candela rating 7125-1591:218
RM	EST	SIGA-CR	4"sq. deep & 1-gang ring	Addressable Control Relay Module 7300-1591:121
M1	EST	SIGA-CT1	4"sq. deep & 1-gang ring	Addressable Input Module 7300-1591:121
M2	EST	SIGA-CT2	4"sq. deep & 1-gang ring	Addressable Dual-Input Module 7300-1591:121
DH	EST	1504-N5	single gang	Electromagnetic Door Holder 3550-1501:137
R	Air Products	RIC-1		Power Relay 7300-1004:101
EOL				End Of Line Resistor
J	Provided and installed by others			Junction Box
FSD	Provided and installed by others			Fire Smoke Damper
FS	Provided and installed by others			Fire Sprinkler Waterflow Switch
TS	Provided and installed by others			Fire Sprinkler Tamper Switch
(bell)	Provided and installed by others			Fire Sprinkler Waterflow Bell

APPROVAL STAMP
IDENTIFICATION STAMP
DIVISION OF THE STATE ARCHITECT
APPL 02- 107417
AC [signature] FLS TH SS AK
DATE: 12/21/05

NO.	ISSUED FOR	DATE
1	DSA APPROVAL SET	12/08/05

REGISTERED PROFESSIONAL ENGINEER JOSEPH W. ... E 10951 EXP. 6/30/07 ELECTRICAL STATE OF CALIFORNIA

Date Signed 12/06/05
CERTIFIED BY

K M D
KAPLAN McLAUGHLIN DIAZ
ARCHITECTURE PLANNING
222 VALLEJO SAN FRANCISCO, CA 94111
(415) 398-5191 FAX (415) 394-7158

ALFATECH
120 MONTGOMERY STREET, SUITE 715 415-403-3000
SAN FRANCISCO, CALIFORNIA 94104 FAX: 415-788-6040
SAN JOSE • NEW JERSEY • SINGAPORE • AUSTRALIA
AT Project No. 204231

SOLANO COMMUNITY COLLEGE

SCCD
VALLEJO CENTER
Contract # A003.6123.01.V1
AS BUILTS

PROJECT NO. 419-201 | DATE 12-08-05

FIRE ALARM SYSTEM NOTES, SYMBOLS, CABLE LEGEND, SEQUENCE OF OPERATION, 1-LINE DIAGRAM, & DETAILS

AS BUILTS
E4.00

PLOT DATE:

COPYRIGHT © 2004 BY KMD (KAPLAN McLAUGHLIN DIAZ). ALL RIGHTS RESERVED.

NAC VOLTAGE DROP CALCULATIONS

CALCULATION: dV = V - (2L x K x dI)
Where: dV = device Voltage
V = previous device voltage (Source Voltage = 24 VDC)
K = wire AWG constant (Ω/k') at 167ºF: #12 = 2.05 (stranded/worst case)
L = wire length
dI = current

DEVICE LEGEND: S(x) = Strobe (where 'x' is candela)
HS(x) = Horn/Strobe (where 'x' is candela)
H = Horn
WPH = Weatherproof Horn
CEIL = Ceiling Mounted

CIRCUIT: N3

DEVICE ID NO.	DEVICE TYPE	PREV DEV. CUR (mA)	CURRENT (mA)	WIRE AWG	LENGTH (ft)	DEVICE VDC	PERCENT DROP
N3-1	MHS15	N/A	1010	12	50	23.79	0.86
N3-2	S15	70	940	12	30	23.68	1.34
N3-3	S15	66	874	12	10	23.64	1.49
N3-4	S15	66	808	12	50	23.48	2.18
N3-5	WPH	66	742	12	30	23.38	2.56
N3-6	S15	40	702	12	90	23.13	3.64
N3-7	MHS75	66	636	12	30	23.05	3.97
N3-8	S15	186	450	12	60	22.94	4.43
N3-9	MHS75	66	384	12	70	22.83	4.89
N3-10	S15	186	198	12	25	22.81	4.97
N3-11	S15	66	132	12	5	22.80	4.99
N3-12	S15	66	66	12	35	22.79	5.03

CIRCUIT: N4

DEVICE ID NO.	DEVICE TYPE	PREV DEV. CUR (mA)	CURRENT (mA)	WIRE AWG	LENGTH (ft)	DEVICE VDC	PERCENT DROP
N4-1	MHS110	N/A	1300	12	70	23.63	1.55
N4-2	MHS110	237	1063	12	70	23.32	2.83
N4-3	MHS110	237	826	12	5	23.30	2.90
N4-4	S15	237	589	12	25	23.24	3.15
N4-5	WPH	66	523	12	65	23.11	3.73
N4-6	S15	40	483	12	85	22.94	4.43
N4-7	MHS110	66	417	12	30	22.89	4.64
N4-8	WPH	237	180	12	40	22.86	4.77
N4-9	MHS15	40	140	12	75	22.81	4.95
N4-10	MHS15	70	70	12	55	22.80	5.01

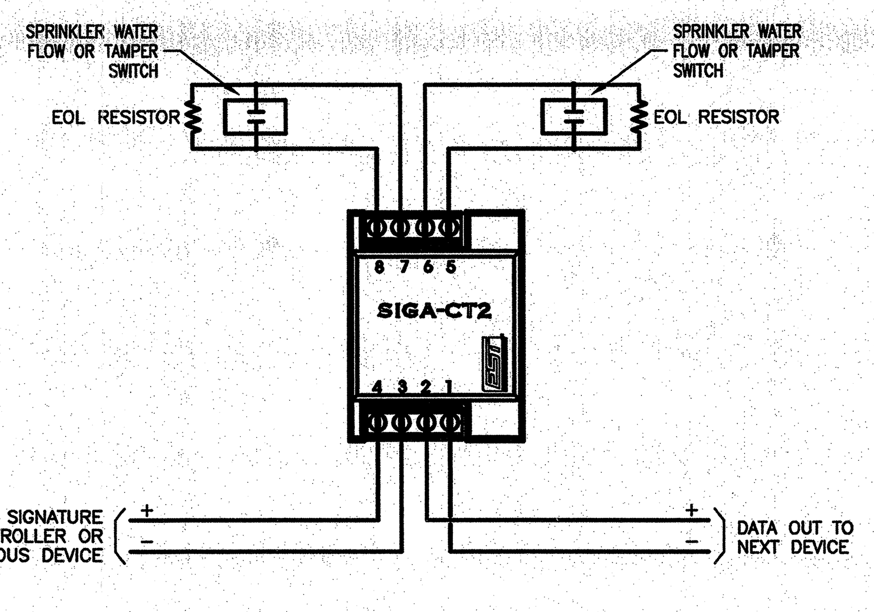

SPRINKLER SYSTEM INTERFACE DETAIL
NO SCALE

GENERAL NOTES:

1. CONNECT ALL FSD'S TO CIRCUIT L1A-22 OR L1A-30 AS REQUIRED. 10 FSD'S MAXIMUM PER CIRCUIT.

Copy sent by e-mail to: Long Electric on 11/6/06

Ralph Larsen & Son, Inc.
General Contractors License No. 189341
300 8th Avenue
San Mateo, CA 94401-4221
Phone (650) 579-0339
Fax (650) 579-0349

Request for Information 105

Detailed, RFIs Grouped by RFI Number

Revised 11/6/06

Vallejo Center for Solano Community College Dist
Northgate Business Park
545 Columbus Parkway
Vallejo, CA 94591

Project # 2604
Tel: (707) 649-8327 Fax: (707) 553-9728

Ralph Larsen & Son, Inc.

RFI #: 105 — Date Created: 8/30/2006

Answer Company — Answered By — Author Company: Ralph Larsen & Son, Inc., 300 8th Avenue, San Mateo, CA 94401 — Authored By: Jay Tucker

Co-Respondent — Author RFI Number

Subject: Duct detectors can not handle 120-volt Fire Smoke Dampers — Discipline — Category

Cc: Company Name — Contact Name — Copies — Notes

Question — Date Required: 9/11/2006

Review attached RFI from Long Electric. Section 15820-6, 2.06, F, 5 requires us to provide 115 V single phase, 60 HZ motors. The relay board on the Specified Duct Smoke detectors are not rated for 115 (or 120) volts. The Specified Duct Detectors will not be able to control the Fire Smoke Dampers. An addressable control relay will need to be added at each Fire Smoke Damper. It may be necessary to add addressable control relays for AC fan shut down also. The Contract drawings do not show the addressable control relays.
1. Do you want us to added addressable relays at the duct detectors as CHANGE ORDER WORK?
2. If the answer to question #1 is no, how do you want to resolve the conflict between the voltage of the Fire Smoke Dampers and the duct smoke detectors?

Suggestion

Answer — Date Answered:

Please provide (1) relay per floor as recommended by DFP (email from Scott Baldocchi dated 10/25/06) so that all FSD's will be controlled as a whole on each floor.

Valeria Balderramos
11/06/06
Alfa Tech Cambridge Group

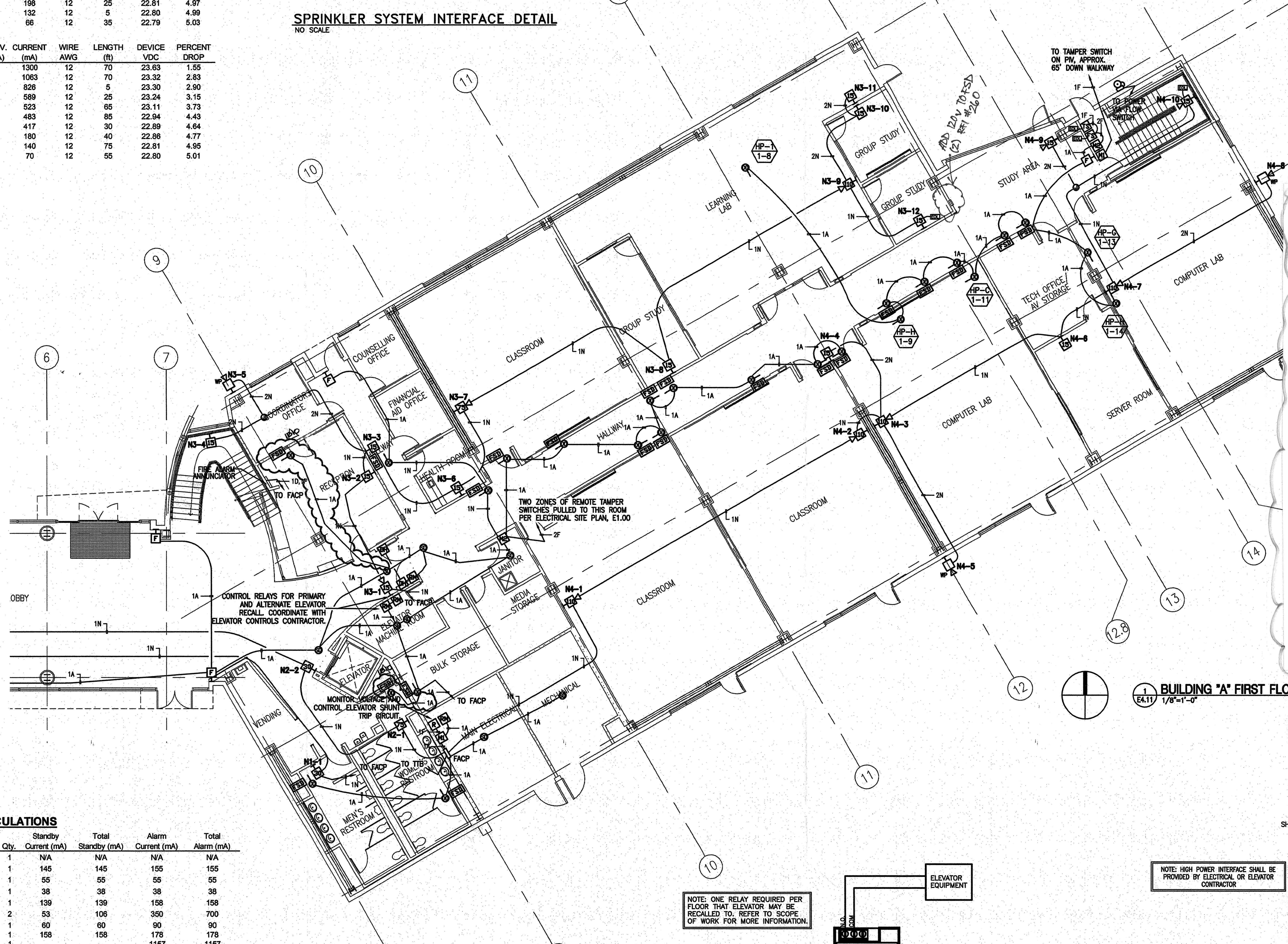

From: Howard, Darcy [mailto:howard@kmd-arch.com]
Sent: Thursday, May 17, 2007 11:30 AM
To: Ron Richards; Kung, Melanie
Cc: dtucker@ralphlarsen.net; Scott Colt; Kevin Scott; Lester Young; Frank Kitchen
Subject: RE: Vallejo Center Duct Smoke Detector

Ron,

KMD, and our sub-consultant Engineers responsible for this scope of work concur with your interpretation.

d'Arcy Howard

-----Original Message-----
From: Ron Richards [mailto:rrichards@kitchell.com]
Sent: Wednesday, May 16, 2007 10:01 AM
To: Howard, Darcy; Kung, Melanie
Cc: dtucker@ralphlarsen.net; Scott Colt; Kevin Scott; Lester Young; Frank Kitchen; Ron Richards
Subject: RE: Vallejo Center Duct Smoke Detector

Darcy,

The letter from AlphaTech provided clarification in general terms, but not in specific terms.

The purpose of this writing is to try and resolve what appears to be a roadblock to progress in the interpretation and installation of the Duct Detector requirements.
The AlphaTech letter states that to determine the number of Duct Detectors needed, both Div 15 and Div 16 need to be considered. I would agree with that statement, However, that means that the Contractor would have to make an interpretation of the drawings and applicable code to determine what is actually required. To insure there is a "meeting of the minds" of what the contractors interpretation is for what is required and what the Architects/EE design intent and interpretation is, It is imperative that there be clarity on this issue to ensure that the contractor installs what the EE intended.

Since noone is willing to step to the plate and make that Specific clarification, I will. Furthermore I request a confirmation from you and/or AlphaTech that this interpretation meets their design intent.

It is my interpretation and understanding of the contract documents that the Duct Detectors shown on the approved Electrical drawings, E4.11, E4.12, and E4.21 mirror and cover the requirements of duct detection shown on the Mechanical drawings M2.11, M2.12, and M2.21. The specific installation location for those duct detectors is a field coordination issue of the Contractor for code compliance for the mechanical systems installed under the mechanical section. Therefore, If the contractor follows Electrical drawing sheets, E4.11, E4.12, and E4.21, Including applicable IB's and RFI's that have subsequently been issued, and meets the performance criteria of specification section 15900 for shutdown of the heat pump units upon smoke detection, He will have complied with the requirements of the Mechanical drawing sections, and therefore complied with both mechanical and electrical sections.

It is true that there is a discrepancy in the electrical drawings as to the quantity of duct detectors identified. There is a five(5) duct detector discrepancy between the single line diagram (E4.00)quantity and the quantity shown on the combined sheets of E4.11, E4.12, and E4.21. I have reviewed the electrical drawings, and in fact the single line diagram E4.00 indicates 59 total duct detectors prior to the issuance of IB-10 and RFI-260, which would make for a total of 64 duct detectors after IB-10 and RFI-260. The combined floor plan electrical sheets indicate only 54 detectors with a total of 59 duct detectors with IB-10 and RFI-260 included. My view is that the total duct detection shown on the Electrical floor plan fire alarm drawing sheets E4.11, E4.12, and E4.21 meet the duct detection intent for both mechanical and electrical sections and therefore 59 should be the correct total reasonable interpretation.

Please confirm that this is a reasonable interpretation of the contract documents to move forward with completion of this scope of work.

Sincerely,
Ronald K. Richards
KITCHELL CEM

1 / E4.11 BUILDING "A" FIRST FLOOR FIRE ALARM PLAN
1/8"=1'-0"

FACP BATTERY CALCULATIONS

Description	Qty.	Standby Current (mA)	Total Standby (mA)	Alarm Current (mA)	Total Alarm (mA)
3-PPS/M Power Supply	1	N/A	N/A	N/A	N/A
3-CPU3 Central Processor	1	145	145	155	155
3-RS485B Communications Card	1	55	55	55	55
3-LCD LCD Module	1	38	38	38	38
3-SSDC1 SIGA Controller *	1	139	139	158	158
3-IDC8/4 Hardwired Module	2	53	106	350	700
3-MODCOM DACT Module	1	60	60	90	90
3-LCDANN Remote Annunciator	1	158	158	178	178
NAC N1	1	--	--	1157	1157
NAC N2	1	--	--	1298	1298
NAC N3	1	--	--	1010	1010
NAC N4	1	--	--	1300	1300
NAC N5	1	--	--	589	589
NAC N6	1	--	--	427	427
NAC N7	1	--	--	746	746
NAC N8	1	--	--	1018	1018
TOTALS	--	--	701	--	8919

* NOTE: The SIGA Device Controller is calculated with the maximum Signature addressable device load

Battery Requirement Calculation for 24 Hours Standby and 5 Minutes Alarm:
Ampere Hours = [(Standby Current x Time)+(Alarm Current x Time)] x Derating Factor
Ampere Hours = [(0.701A x 24 hrs)+(8.919A x 0.084 hrs)] x 1.2
Ampere Hours = 21.1

BATTERIES SUPPLIED: (2) 12 Volts, 24 Ampere Hours (24 Volts, 24 Ampere Hours)

NOTE: ONE RELAY REQUIRED PER FLOOR THAT ELEVATOR MAY BE RECALLED TO. REFER TO SCOPE OF WORK FOR MORE INFORMATION.

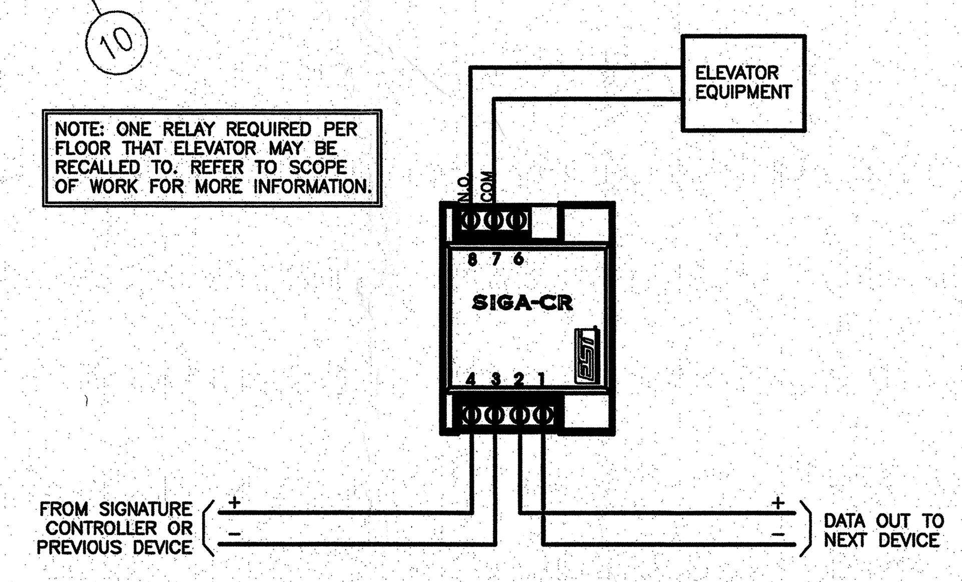

ELEVATOR RECALL CONTROL DETAIL
NO SCALE

NOTE: HIGH POWER INTERFACE SHALL BE PROVIDED BY ELECTRICAL OR ELEVATOR CONTRACTOR

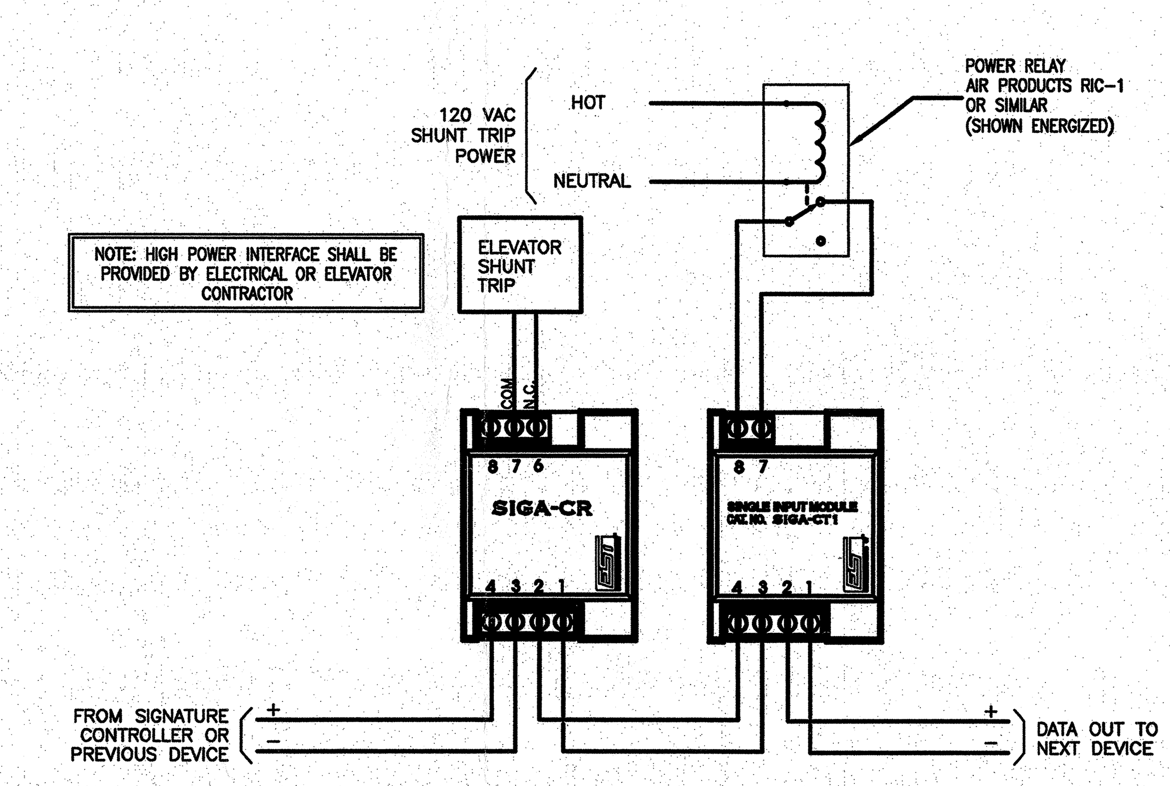

ELEVATOR SHUNT-TRIP DETAIL
NO SCALE

APPROVAL STAMP
IDENTIFICATION STAMP IB-10
DIVISION OF THE STATE ARCHITECT
APPL 02- 107417
AC — FLS EL SS JM
DATE: 4/23/07

NO.	ISSUED FOR	DATE
IB10	INFORMATION BULLETIN #10	02/22/07
1	DSA APPROVAL SET	12/08/05

REGISTERED PROFESSIONAL ENGINEER — JOSEPH W. KWAN — E 10961 — EXP. 6/30/07 — ELECTRICAL — STATE OF CALIFORNIA
Date Signed ~~12/06/05~~ 2/21/07
CERTIFIED BY

K M D
KAPLAN McLAUGHLIN DIAZ
ARCHITECTURE PLANNING
222 VALLEJO SAN FRANCISCO, CA 94111
(415) 398-5191 FAX (415) 394-7158

alfatech_logo_Final small bw.jpg
120 MONTGOMERY STREET, SUITE 715 415-403-3000
SAN FRANCISCO, CALIFORNIA 94104 FAX: 415-788-6040
SAN JOSE • NEW JERSEY • SINGAPORE • AUSTRALIA
AT Project No. 204201

SCCD
VALLEJO CENTER
Contract # A003.6123.01.V1

PROJECT NO. 419-201 — DATE 12-08-05

BUILDING "A" FIRST FLOOR FIRE ALARM PLAN, DETAILS AND CALCULATIONS
AS BUILTS

E4.11

PLOT DATE:

COPYRIGHT © 2004 BY KMD (KAPLAN McLAUGHLIN DIAZ). ALL RIGHTS RESERVED.

NAC VOLTAGE DROP CALCULATIONS

CALCULATION: dV = V - (2L x K x dI)

Where: dV = device Voltage
V = previous device voltage (Source Voltage = 24 VDC)
K = wire AWG constant (Ω/k') at 167ºF: #12 = 2.05 (stranded/worst case)
L = wire length
dI = current

DEVICE LEGEND: S(x) = Strobe (where 'x' is candela)
HS(x) = Horn/Strobe (where 'x' is candela)
H = Horn
WPH = Weatherproof Horn
CEIL = Ceiling Mounted

CIRCUIT: N1

DEVICE ID NO.	DEVICE TYPE	PREV DEV. CUR (mA)	CURRENT (mA)	WIRE AWG	LENGTH (ft)	DEVICE VDC	PERCENT DROP
N1-1	S30	N/A	1157	12	50	23.76	0.99
N1-2	MHS75	96	1061	12	110	23.28	2.98
N1-3	WPH	186	875	12	30	23.18	3.43
N1-4	S75	40	835	12	55	22.99	4.22
N1-5	WPH	186	649	12	30	22.91	4.55
N1-6	MHS75	40	609	12	30	22.83	4.86
N1-7	S75	186	423	12	75	22.70	5.40
N1-8	MHS110	186	237	12	45	22.66	5.58

CIRCUIT: N2

DEVICE ID NO.	DEVICE TYPE	PREV DEV. CUR (mA)	CURRENT (mA)	WIRE AWG	LENGTH (ft)	DEVICE VDC	PERCENT DROP
N2-1	S75	N/A	1298	12	25	23.87	0.55
N2-2	S30	186	1112	12	45	23.66	1.41
N2-3	MHS75	96	1016	12	90	23.29	2.97
N2-4	S15	186	830	12	35	23.17	3.47
N2-5	S75	66	764	12	40	23.04	3.99
N2-6	MHS15	186	578	12	70	22.88	4.68
N2-7	S30	70	508	12	50	22.77	5.11
N2-8	S75	96	412	12	35	22.71	5.36
N2-9	WPH	186	226	12	5	22.71	5.38
N2-10	MHS75	40	186	12	70	22.66	5.60

Copy sent by e-mail to: Dowdle & Sons; Long Electric, Associated Constructors on 11/6/06

Ralph Larsen & Son, Inc.
General Contractor License No. 395241
200 Elk Avenue
Elk Grove, CA 95427-4221
Phone: (916) 273-0339
Fax: (916) 379-0140

Request for Information 174

Detailed, RFIs Grouped by RFI Number

Copy sent by email to: East Bay on 2/3/07

Vallejo Center for Rotaev Community College Dist
Northgate Business Park
545 Columbus Parkway
Vallejo, CA 94591

Project # 3654
Tel: (707) 649-8327 Fax: (707) 553-9728

Ralph Larsen & Son, Inc.

RFI #: 174

Date Created: 11/2/2006

Answer Company | Answered By | Author Company | Authored By
Ralph Larsen & Son, Inc. | Jay Tucker
200 Elk Ave.
Elk Grove, CA 95427

Co-Respondent | Author RFI Number

Subject | Discipline | Category
Need hanger detail for pipe support at LOBBY ROOF

Cc: Company Name | Contact Name | Copies | Notes

Question | Date Required: 11/6/2006
The Contract Drawings show several pipe systems that must be supported from the roof structure between GRID LINES 5 TO 7 and between GRIDS N to P. Detail M4E.04 is the only detail we have found that provides information on support of pipes from the structure. We have not found any details for support from the roof structure that apply to the structure in this area. This area of the roof structure has metal decking (type 0) with no concrete fill) over the steel beams. Detail M4E.04 refers us to 2/S07.02 for connection to metal decking. We are unable to utilize attachment detail 2/S07.02 for the following reasons:
1. Have we overlooked a detail within the Contract Documents that could be used in this areas?
Review the attached details showing the supports that we have already installed for the pipe supports in this areas. The Contract Drawings show the pipes supported from the roof structure, but do not provide any information on how to do this. See NOTE 3 of detail M4E.01. Our understanding is that this note is being applied to all supports (not just duct supports).
2. Is the support method shown in the attached sketches acceptable for support of all piping between GRID LINES 5 to 7 and between GRID N to P?

Suggestion

Answer
- DASSE TAKES NO EXCEPTION TO THE SUPPORT OF M/E/P PIPES AS SHOWN ON THIS RFI.
- GEC TO COORDINATE BRACING PER SMACNA GUIDELINES.

Chick-hung Cheng / DASSE.

Date Answered:

Printed on: 11/2/2006 RALPH Page 1

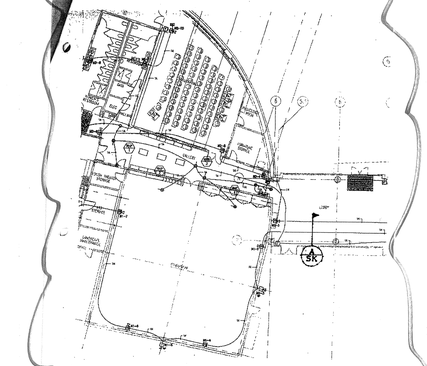

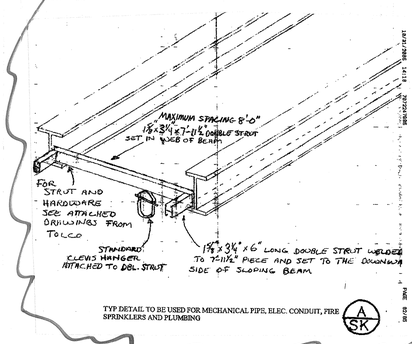

TYP DETAIL TO BE USED FOR MECHANICAL PIPE, ELEC. CONDUIT, FIRE SPRINKLERS AND PLUMBING (A/SK)

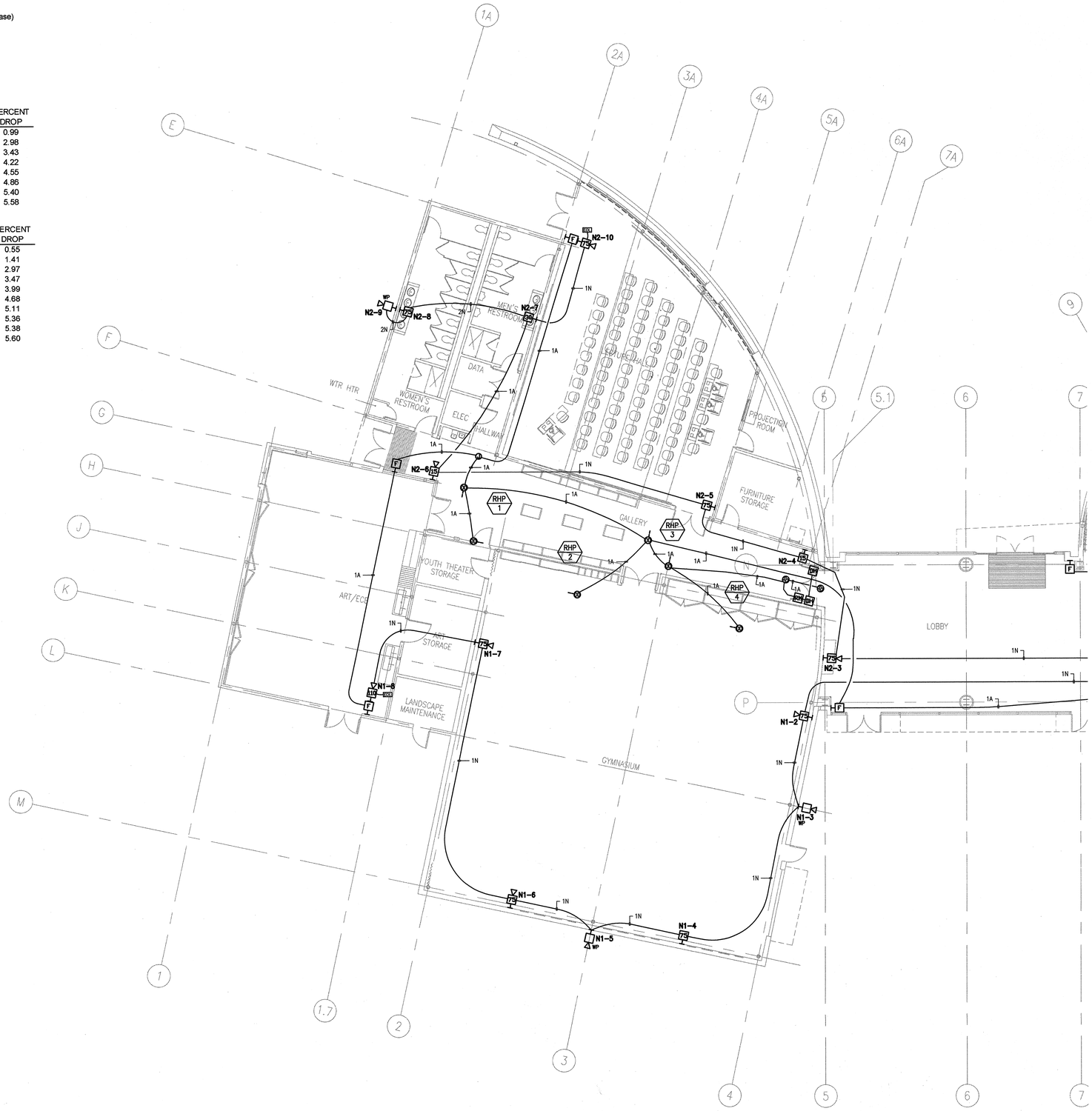

1 E4.12 **BUILDING "B" FIRST FLOOR FIRE ALARM PLAN**
1/8"=1'-0"

APPROVAL STAMP
IDENTIFICATION STAMP
DIVISION OF THE STATE ARCHITECT
APP. 02- 107417
AC FLS SS
DATE: 12/21/05

NO.	ISSUED FOR	DATE
1	DSA APPROVAL SET	12/06/05

REGISTERED PROFESSIONAL ENGINEER
E 10951
EXP. 6/30/07
ELECTRICAL
STATE OF CALIFORNIA

Date Signed 12/06/05
CERTIFIED BY

K M D
KAPLAN McLAUGHLIN DIAZ
ARCHITECTURE PLANNING
222 VALLEJO SAN FRANCISCO, CA 94111
(415) 398-5191 FAX (415) 394-7158

ALFATECH
120 MONTGOMERY STREET, SUITE 715 415-403-3000
SAN FRANCISCO, CALIFORNIA 94104 FAX: 415-788-9040
SAN JOSE • NEW JERSEY • SINGAPORE • AUSTRALIA
AT Project No. 20431

SOLANO COMMUNITY COLLEGE

SCCD
VALLEJO CENTER
Contract # A003.6123.01.V1

PROJECT NO.	DATE
419-201	12-08-05

BUILDING "B" FIRST FLOOR FIRE ALARM PLAN AND CALCULATIONS
AS BUILTS

E4.12

PLOT DATE:

COPYRIGHT © 2004 BY KMD (KAPLAN McLAUGHLIN DIAZ). ALL RIGHTS RESERVED.

NAC VOLTAGE DROP CALCULATIONS

CALCULATION: dV = V - (2L x K x dI)
Where: dV = device Voltage
V = previous device voltage (Source Voltage = 24 VDC)
K = wire AWG constant (Ω/k') at 167ºF: #12 = 2.05 (stranded/worst case)
L = wire length
dI = current

DEVICE LEGEND: S(x) = Strobe (where 'x' is candela)
HS(x) = Horn/Strobe (where 'x' is candela)
H = Horn
WPH = Weatherproof Horn
CEIL = Ceiling Mounted

CIRCUIT: N5

DEVICE ID NO.	DEVICE TYPE	PREV DEV. CUR (mA)	CURRENT (mA)	WIRE AWG	LENGTH (ft)	DEVICE VDC	PERCENT DROP
N5-1	MHS110	N/A	589	12	20	23.95	0.20
N5-2	S75	237	352	12	10	23.94	0.26
N5-3	S30	186	168	12	25	23.92	0.33
N5-4	MHS15	96	70	12	20	23.91	0.36

CIRCUIT: N6

DEVICE ID NO.	DEVICE TYPE	PREV DEV. CUR (mA)	CURRENT (mA)	WIRE AWG	LENGTH (ft)	DEVICE VDC	PERCENT DROP
N6-1	MHS15	N/A	427	12	70	23.88	0.51
N6-2	MHS30	70	357	12	35	23.83	0.72
N6-3	S30	99	258	12	30	23.79	0.86
N6-4	S15	96	162	12	30	23.77	0.94
N6-5	S30	66	96	12	40	23.76	1.00

CIRCUIT: N7

DEVICE ID NO.	DEVICE TYPE	PREV DEV. CUR (mA)	CURRENT (mA)	WIRE AWG	LENGTH (ft)	DEVICE VDC	PERCENT DROP
N7-1	MHS110	N/A	746	12	65	23.80	0.83
N7-2	MHS15	237	509	12	80	23.63	1.52
N7-3	MHS110	70	439	12	40	23.56	1.82
N7-4	S15	237	202	12	15	23.55	1.88
N7-5	MHS15	66	136	12	15	23.54	1.91
N7-6	S15	70	66	12	10	23.54	1.92

CIRCUIT: N8

DEVICE ID NO.	DEVICE TYPE	PREV DEV. CUR (mA)	CURRENT (mA)	WIRE AWG	LENGTH (ft)	DEVICE VDC	PERCENT DROP
N8-1	MHS110	N/A	1018	12	120	23.50	2.09
N8-2	MHS110	237	781	12	15	23.45	2.29
N8-3	MHS110	237	544	12	60	23.32	2.84
N8-4	MHS110	237	307	12	5	23.31	2.87
N8-5	MHS15	237	70	12	35	23.30	2.91

GENERAL NOTES

IP#1
1. CONNECT ALL FSD TO CIRCUIT L2A-69 OR L2A-95/97 AS REQUIRED. 10 FSD'S MAXIMUM PER CIRCUIT.

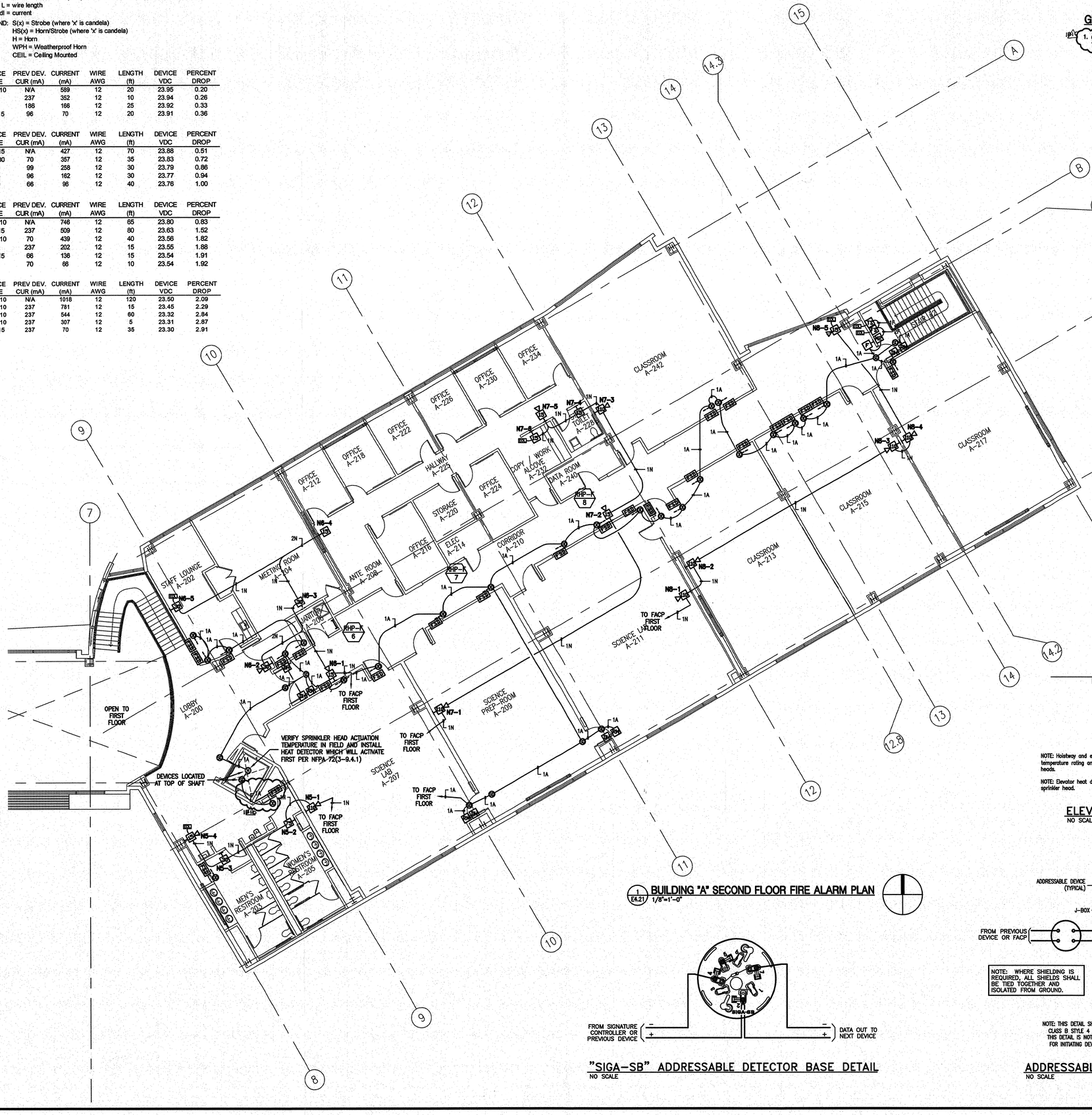

1 / EA.21 BUILDING "A" SECOND FLOOR FIRE ALARM PLAN
1/8"=1'-0"

"SIGA-SB" ADDRESSABLE DETECTOR BASE DETAIL
NO SCALE

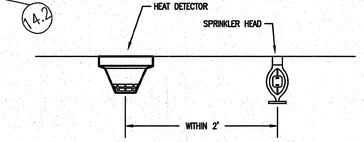

NOTE: Hoistway and elevator equipment heat detectors shall have a lower temperature rating and rate of temperature increase (RTI) than the sprinkler heads.

NOTE: Elevator heat detector shall be installed within two feet of associated sprinkler head.

ELEVATOR HEAT DETECTOR DETAIL
NO SCALE

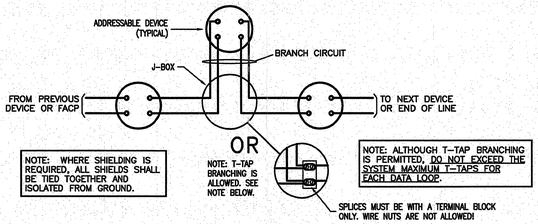

NOTE: THIS DETAIL SHOWS ACCEPTABLE WIRING PRACTICES FOR THE SUBMITTED NFPA 72 CLASS B STYLE 4 SIGNALING LINE CIRCUIT (SLC) USED FOR ADDRESSABLE DEVICES. THIS DETAIL IS NOT INTENDED FOR ANY CLASS A TYPE CIRCUIT, NOR IS IT INTENDED FOR INITIATING DEVICE CIRCUITS (IDC) OR NOTIFICATION APPLIANCE CIRCUITS (NAC).

ADDRESSABLE (SLC) CIRCUIT WIRING DETAIL
NO SCALE

-----Original Message-----
From: Howard, Darcy [mailto:howard@kmd-arch.com]
Sent: Thursday, May 17, 2007 11:30 AM
To: Ron Richards; Kung, Melanie
Cc: dtucker@ralphlarsen.net; Scott Colt; Kevin Scott; Lester Young; Frank Kitchen
Subject: RE: Vallejo Center Duct Smoke Detector

Ron,

KMD, and our sub-consultant Engineers responsible for this scope of work concur with your interpretation.

d'Arcy Howard

-----Original Message-----
From: Ron Richards [mailto:rrichards@kitchell.com]
Sent: Wednesday, May 16, 2007 10:01 AM
To: Howard, Darcy; Kung, Melanie
Cc: dtucker@ralphlarsen.net; Scott Colt; Kevin Scott; Lester Young; Frank Kitchen; Ron Richards
Subject: RE: Vallejo Center Duct Smoke Detector

Darcy,

The letter from AlphaTech provided clarification in general terms, but not in specific terms.

The purpose of this writing is to try and resolve what appears to be a roadblock to progress in the interpretation and installation of the Duct Detector requirements.
The AlphaTech letter states that to determine the number of Duct Detectors needed, both Div 15 and Div 16 need to be considered. I would agree with that statement, However, that means that the Contractor would have to make an interpretation of the drawings and applicable code to determine what is actually required. To insure there is a "meeting of the minds" of what the contractors interpretation is for what is required and what the Architects/EE design intent and interpretation is, It is imperative that there be clarity on this issue to ensure that the contractor installs what the EE intended.

Since noone is willing to step to the plate and make that Specific clarification, I will. Furthermore I request a confirmation from you and/or AlphaTech that this interpretation meets their design intent.

It is my interpretation and understanding of the contract documents that the Duct Detectors shown on the approved Electrical drawings, E4.11, E4.12, and E4.21 mirror and cover the requirements of duct detection shown on the Mechanical drawings M2.11, M2.12, and M2.21. The specific installation location for those duct detectors is a field coordination issue of the Contractor for code compliance for the mechanical systems installed under the mechanical section. Therefore, If the contractor follows Electrical drawing sheets, E4.11, E4.12, and E4.21, Including applicable IB's and RFI's that have subsequently been issued, and meets the performance criteria of specification section 15900 for shutdown of the heat pump units upon smoke detection, He will have complied with the requirements of the Mechanical drawing sections, and therefore complied with both mechanical and electrical sections.

It is true that there is a discrepancy in the electrical drawings as to the quantity of duct detectors identified. There is a five(5) duct detector discrepancy between the single line diagram (E4.00)quantity and the quantity shown on the combined sheets of E4.11, E4.12, and E4.21. I have reviewed the electrical drawings, and in fact the single line diagram E4.00 indicates 59 total duct detectors prior to the issuance of IB-10 and RFI-260, which would make for a total of 64 duct detectors after IB-10 and RFI-260. The combined floor plan electrical sheets indicate only 54 detectors with a total of 59 duct detectors with IB-10 and RFI-260 included. My view is that the total duct detection shown on the Electrical floor plan fire alarm drawing sheets E4.11, E4.12, and E4.21 meet the duct detection intent for both mechanical and electrical sections and therefore 59 should be the correct total reasonable interpretation.

Please confirm that this is a reasonable interpretation of the contract documents to move forward with completion of this scope of work.

Sincerely,
Ronald K. Richards
KITCHELL CEM

Copy sent by e-mail to: Long Electric on 11/6/06

Ralph Larsen & Son, Inc.
Request for information 105
Deleted, RFIs Grouped by RFI Number

Revised 11/6/06

Vallejo Center for Solano Community College Dist
Northgate Business Park
540 Columbus Parkway
Vallejo, CA 94591
Project # 3904
Tel: (707) 648-8327 Fax: (707) 553-9728
Ralph Larsen & Son, Inc.

RFI #: 105
Date Created: 8/30/2006
Answer Company | Answered By | Author Company: Ralph Larsen & Son, Inc. 300 8th Avenue San Mateo, CA. 94401 | Authored By: Jay Tucker
Co-Respondent | Author RFI Number
Subject: Dual detectors can not handle 120-volt Fire Smoke Dampers
Discipline | Category
Cc: Company Name | Contact Name | Copies | Notes
Question
Date Required: 9/11/2006
Review attached RFI from Long Electric. Section 16526.4, 2.06, F, 5 requires us to provide 115 V single phase, 60 HZ motors. The relay board on the Specified Duct Smoke detectors are rated for 120 volts. The Specified Duct Detectors will not be able to control the Fire Smoke Dampers. An addressable control relay will need to be added at each Fire Smoke Damper. It may be necessary to add addressable control relays for AC fan shut down also. The Contract drawings do not show the addressable control relays.
1. Do you want us to added addressable relays at the duct detectors as CHANGE ORDER WORK?
2. If the answer to question # 1 is no, how do you want to resolve the conflict between the voltage of the Fire Smoke Dampers and the duct smoke detectors?
Suggestion
Answer
Date Answered:
Please provide (1) relay per floor as recommended by DFP (email from Scott Baldocchi dated 10/25/06) so that all FSD's will be controlled as a whole on each floor.
Valeria Baldermmos
11/06/06
Alfa Tech Cambridge Group

APPROVAL STAMP
IDENTIFICATION STAMP 2B-10
DIVISION OF THE STATE ARCHITECT
APPL 02- 107417
AC — FLS EL SS 4003
DATE: 4/23/07

NO.	ISSUED FOR	DATE
10	INFORMATION BULLETIN #10	02/22/07
1	DSA APPROVAL SET	12/08/05

REGISTERED PROFESSIONAL ENGINEER JOSEPH V. LONG No. 10501 EXP. 6/30/07 ELECTRICAL STATE OF CALIFORNIA
Date Signed 12/06/05 2/21/07
CERTIFIED BY

K M D
KAPLAN McLAUGHLIN DIAZ
ARCHITECTURE PLANNING
222 VALLEJO SAN FRANCISCO, CA 94111
(415) 398-5191 FAX (415) 394-7158

alfatech_logo_Final small bw.jpg

120 MONTGOMERY STREET, SUITE 710 415-403-3000
SAN FRANCISCO, CALIFORNIA 94104 FAX: 415-788-8040
SAN JOSE • NEW JERSEY • SINGAPORE • AUSTRALIA
Alfa Project No. 2525

SCCD
VALLEJO CENTER
Contract # A003.6123.01.V1

PROJECT NO. 419-201
DATE 12-08-05

BUILDING "A" SECOND FLOOR FIRE ALARM PLAN, DETAILS AND CALCULATIONS
AS BUILTS

E4.21

PLOT DATE:

COPYRIGHT © 2004 BY KMD (KAPLAN McLAUGHLIN DIAZ). ALL RIGHTS RESERVED.

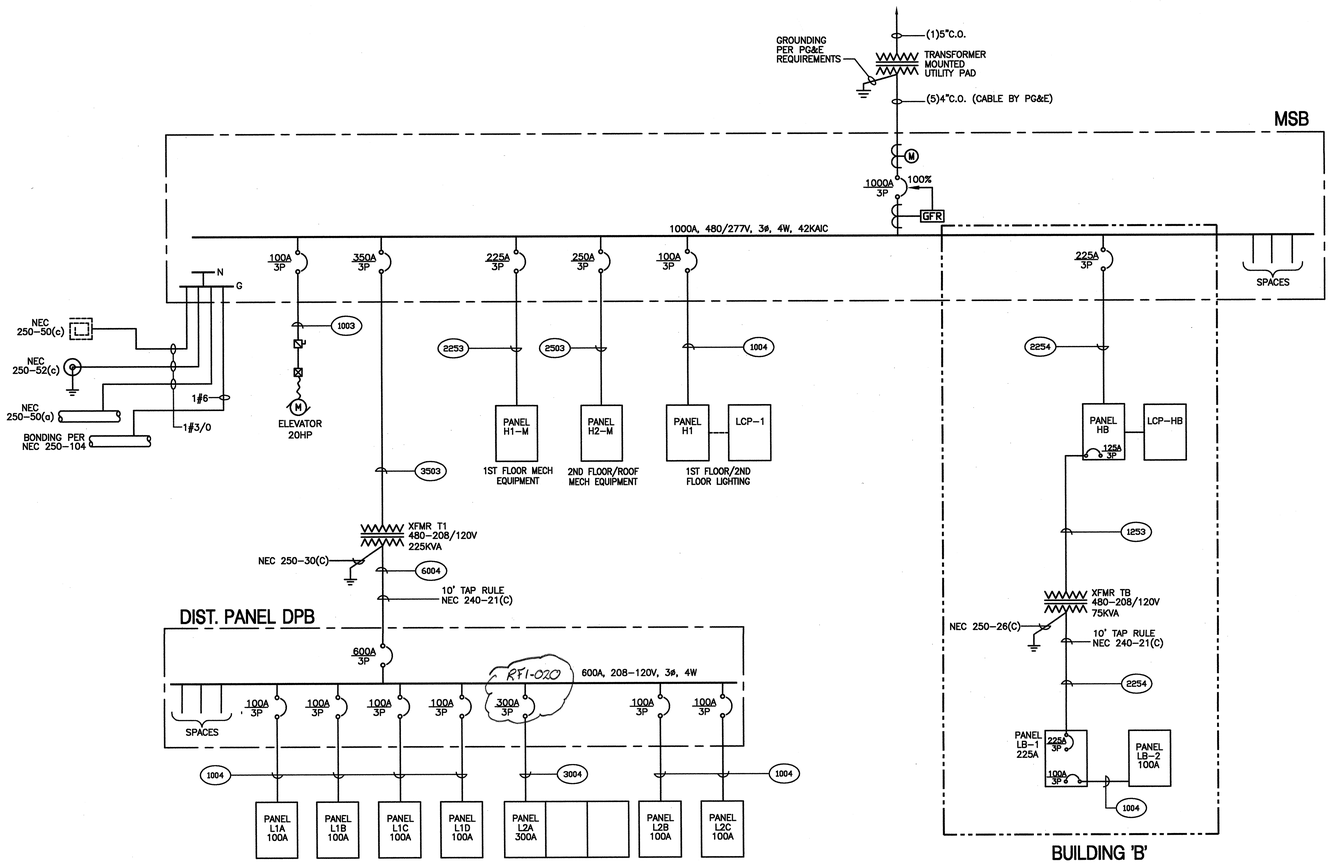

COPPER FEEDER SCHEDULE – 3 PHASE, 4 WIRE				
SYMBOL	AMPERES	PHASE/NEUTRAL	GROUND	CONDUIT
154	15A, 3PH4W	4–#12	#12	1/2"
204	20A, 3PH4W	4–#12	#12	1/2"
304	30A, 3PH4W	4–#10	#10	1/2"
404	40A, 3PH4W	4–#8	#10	3/4"
504	50A, 3PH4W	4–#8	#10	1"
604	60A, 3PH4W	4–#6	#10	1"
704	70A, 3PH4W	4–#4	#8	1 1/4"
804	80A, 3PH4W	4–#4	#8	1 1/4"
1004	100A, 3PH4W	4–#2	#8	1 1/4"
1254	125A, 3PH4W	4–#1	#6	1 1/2"
1504	150A, 3PH4W	4–#1/0	#6	2"
1754	175A, 3PH4W	4–#2/0	#6	2"
2004	200A, 3PH4W	4–#3/0	#6	2"
2254	225A, 3PH4W	4–#4/0	#4	2 1/2"
2504	250A, 3PH4W	4–#250 KCM	#4	2 1/2"
3004	300A, 3PH4W	4–#350 KCM	#4	3"
3504	350A, 3PH4W	4–#400 KCM	#2	3"
4004	400A, 3PH4W	4–#500 KCM	#2	3"
5004	500A, 3PH4W	(2) 4–#250 KCM	(2) #2	(2) 2 1/2"
6004	600A, 3PH4W	(2) 4–#350 KCM	(2) #1	(2) 3"
8004	800A, 3PH4W	(2) 4–#500 KCM	(2) #1/0	(2) 3"
10004	1000A, 3PH4W	(3) 4–#400 KCM	(3) #2/0	(3) 3"
12004	1200A, 3PH4W	(3) 4–#600 KCM	(3) #3/0	(3) 4"
16004	1600A, 3PH4W	(4) 4–#600 KCM	(4) #4/0	(4) 4"
20004	2000A, 3PH4W	(5) 4–#600 KCM	(5) #250 KCM	(5) 4"

COPPER FEEDER SCHEDULE – 3 PHASE, 3 WIRE				
SYMBOL	AMPERES	PHASE/NEUTRAL	GROUND	CONDUIT
153	15A	3–#12	#12	1/2"
203	20A	3–#12	#12	1/2"
303	30A	3–#10	#10	1/2"
403	40A	3–#8	#10	3/4"
503	50A	3–#8	#10	3/4"
603	60A	3–#6	#10	1"
703	70A	3–#4	#8	1"
803	80A	3–#3	#8	1 1/4"
903	90A	3–#3	#8	1 1/4"
1003	100A	3–#2	#8	1 1/4"
1253	125A	3–#1	#6	1 1/2"
1503	150A	3–#1/0	#6	1 1/2"
1753	175A	3–#2/0	#6	2"
2003	200A	3–#3/0	#6	2"
2253	225A	3–#4/0	#4	2 1/2"
2503	250A	3–#250KCM	#4	2 1/2"
3003	300A	3–#350 KCM	#4	2 1/2"
3503	350A	3–#400 KCM	#2	3"
4003	400A	3–#500 KCM	#2	3"
5003	500A	(2) 3–#250 KCM	(2) #2	(2) 2 1/2"
7003	700A	(2) 3–#300 KCM	(2) #1/0	(2) 2 1/2"
8003	800A	(2) 3–#500 KCM	(2) #1/0	(2) 3"
10003	1000A	(3) 3–#400 KCM	(3) #2/0	(3) 3"
12003	1200A	(3) 3–#600 KCM	(3) #3/0	(3) 4"
16003	1600A	(4) 3–#600 KCM	(4) #4/0	(4) 4"
20003	2000A	(5) 3–#600 KCM	(5) #250 KCM	(5) 4"
30003	3000A	(8) 3–#500 KCM	(8) #400 KCM	(8) 3 1/2"

FEEDER SCHEDULE

APPROVAL STAMP
IDENTIFICATION STAMP
DIVISION OF THE STATE ARCHITECT
APP/INC- 107417
AC FLS. TH SS NL
DATE: 12/21/05

NO.	ISSUED FOR	DATE
1	DSA APPROVAL SET	12/08/05

JOSEPH E. LOSH
No. E 10997
EXP. 6/30/07
ELECTRICAL
STATE OF CALIFORNIA
Date Signed 12/06/05
CERTIFIED BY

K M D
KAPLAN McLAUGHLIN DIAZ
ARCHITECTURE PLANNING
222 VALLEJO SAN FRANCISCO, CA 94111
(415) 398-5191 FAX (415) 394-7158

ALFATECH
120 MONTGOMERY STREET, SUITE 715 415-403-5000
SAN FRANCISCO, CALIFORNIA 94104 FAX: 415-788-8040
SAN JOSE • NEW JERSEY • SINGAPORE • AUSTRALIA
AT Project No. 20431

SOLANO COMMUNITY COLLEGE

SCCD
VALLEJO CENTER
Contract # A003.6123.01.V1

PROJECT NO.	DATE
419-201	12-08-05

SINGLE LINE DIAGRAM

AS BUILTS

E5.01

PLOT DATE:

COPYRIGHT © 2004 BY KMD (KAPLAN McLAUGHLIN DIAZ). ALL RIGHTS RESERVED.

G:\000\000-000\ACAD\SHEETS\

PANEL: PANEL H1 | OC DEVICE TYPE: Breaker | ENCLOSURE: NEMA 1 | MAINS(A): MLO | CONTINUOUS(A): 100
LOCATION: MAIN ELEC RM | DEVICE FAMILY: Bolt On | MOUNTING: Surface | WIRING: 3-Phase 4-Wire | AIC RATING(A): 100
FED FROM: MSB | VOLTAGE: 480/277 | FAULT CURRENT(A): 15062

OC AMPS P	NOTES	DESCRIPTION	DEMAND CODE	VA	CKT	PHASE LOADS VA A	B	C	CKT	VA	DEMAND CODE	DESCRIPTION	NOTES	OC AMPS P
20 1		LIGHTS 1ST FLOOR	LIGHTIN	3196	1	7381			2	4185	LIGHTIN	LIGHTS 2ND FLOOR		20 1
20 1		LIGHTS 1ST FLOOR	LIGHTIN	3875	3		8060		4	4185	LIGHTIN	LIGHTS 2ND FLOOR		20 1
20 1		LIGHTS 1ST FLOOR	LIGHTIN	3824	5			7748	6	3924	LIGHTIN	LIGHTS 2ND FLOOR		20 1
20 1		LIGHTS 1ST FLOOR	LIGHTIN	2558	7	4545			8	1987	LIGHTIN	LIGHTS 2ND FLOOR		20 1
20 1		LIGHTS 1ST FLOOR	LIGHTIN	4003	9		7034		10	3031	LIGHTIN	LIGHTS 2ND FLOOR COR		20 1
20 1		SPARE	SPARE	0	11			0	12	0	SPARE	SPARE		20 1
20 1		SPARE	SPARE	0	13	0			14	0	SPARE	SPARE		20 1
20 1		SPARE	SPARE	0	15		0		16	0	SPARE	SPARE		20 1
20 1		SPARE	SPARE	0	17			0	18	0	SPARE	SPARE		20 1
20 1		SPARE	SPARE	0	19	0			20	0	SPARE	SPARE		20 1
20 1		SPARE	SPARE	0	21		0		22	0	SPARE	SPARE		20 1
20 1		SPARE	SPARE	0	23			0	24	0	SPARE	SPARE		20 1
20 1		SPARE	SPARE	0	25	0			26	0	SPARE	SPARE		20 1
20 1		SPARE	SPARE	0	27		0		28	0	SPARE	SPARE		20 1
20 1		SPARE	SPARE	0	29			0	30	0	SPARE	SPARE		20 1
20 1		SPARE	SPARE	0	31	0			32	0	SPARE	SPARE		20 1
20 1		SPARE	SPARE	0	33		0		34	0	SPARE	SPARE		20 1
20 1		SPARE	SPARE	0	35			0	36	0	SPARE	SPARE		20 1
20 1		SPARE	SPARE	0	37	0			38	0	SPARE	SPARE		20 1
20 1		SPARE	SPARE	0	39		0		40	0	SPARE	SPARE		20 1
20 1		SPARE	SPARE	0	41			0	42	0	SPARE	SPARE		20 1

ALL CONNECTED	KVA	MAX PH AMPS	* PHASE TOTALS	VA	AMPS	BUS TOTALS	KVA
TOTAL CONNECTED	34.77	54.5	* A-N	11926.0	43.0	CONNECTED	34.77
TOTAL DEMAND	34.77	54.5	* B-N	15094.0	54.5	DEMAND	34.77
TOTAL DESIGN	43.46	68.1	* C-N	7748.0	28.0	DESIGN	43.46

PANEL: PANEL LB-1 | OC DEVICE TYPE: Breaker | ENCLOSURE: NEMA 1 | MAINS(A): MLO | CONTINUOUS(A): 225
LOCATION: BLDG 'B' ELEC RM | DEVICE FAMILY: Bolt On | MOUNTING: Surface | WIRING: 3-Phase 4-Wire | AIC RATING(A): 0
FED FROM: B-XFRM TB-SEC | VOLTAGE: 208/120 | FAULT CURRENT(A): 509

OC AMPS P	NOTES	DESCRIPTION	DEMAND CODE	VA	CKT	PHASE LOADS VA A	B	C	CKT	VA	DEMAND CODE	DESCRIPTION	NOTES	OC AMPS P
20 1		RCPT-RESTROOM	RECEPTA	1000	1	1500			2	500	RECEPTA	POWERED FURNITURE		20 1
20 1		SPARE	SPARE	0	3		500		4	500	RECEPTA	POWERED FURNITURE		20 1
20 1		DED RCPT- B-102	RECEPTA	180	5			680	6	500	RECEPTA	POWERED FURNITURE		20 1
30 1		DED RCPT- B-102	RECEPTA	500	7	1000			8	500	RECEPTA	POWERED FURNITURE		20 1
30 1	⚠1	DED RCPT- B-102	RECEPTA	500	9		1000		10	500	RECEPTA	POWERED FURNITURE		20 1
20 1		DED RCPT- B-106	RECEPTA	500	11			1000	12	500	RECEPTA	POWERED FURNITURE		20 1
20 1		RCPT- B-106	RECEPTA	720	13	1220			14	500	RECEPTA	POWERED FURNITURE		20 1
20 1		RCPT- B-106	RECEPTA	540	15		1040		16	500	RECEPTA	POWERED FURNITURE		20 1
20 1		RCPT- B-106	RECEPTA	540	17			1040	18	500	RECEPTA	POWERED FURNITURE		20 1
20 1		POWERED FURNITURE	RECEPTA	500	19	1000			20	500	RECEPTA	POWERED FURNITURE		20 1
20 1		POWERED FURNITURE	RECEPTA	500	21		1000		22	500	RECEPTA	POWERED FURNITURE		20 1
20 1		POWERED FURNITURE	RECEPTA	500	23			1000	24	500	RECEPTA	POWERED FURNITURE		20 1
20 1		POWERED FURNITURE	RECEPTA	500	25	1000			26	500	RECEPTA	POWERED FURNITURE		20 1
20 1		POWERED FURNITURE	RECEPTA	500	27		1000		28	500	RECEPTA	POWERED FURNITURE		20 1
20 1		POWERED FURNITURE	RECEPTA	500	29			1000	30	500	RECEPTA	POWERED FURNITURE		20 1
20 1		PROJECTOR SCREEN	GEN	500	31	1000			32	500	GEN	FAEP BLDG B		20 1
20 1		PROJTR SCREEN& LIFT	GEN	500	33		1850		34	1350	LIGHTIN	~~TRACK LIGHTING CORR~~		20 1
20 1		ACU 1-1	MOTOR	200	35			200	36	0	SPARE	SPARE		20 1
20 1		~~SPARE~~	SPARE	0	37	7853			38	23559	NONE	B-LB2	PANEL LB-2	100 3
20 1		SPARE	SPARE	0	39		7853		40	-		″		″
20 1		SPARE BMS Panel	SPARE	0	41			7853	42	-		″		″

ALL CONNECTED	KVA	MAX PH AMPS	* PHASE TOTALS	VA	AMPS	BUS TOTALS	KVA
TOTAL CONNECTED	41.59	126.8	* A-N	15229.1	126.8	CONNECTED	41.59
TOTAL DEMAND	33.65	102.8	* B-N	14541.9	121.1	DEMAND	33.65
TOTAL DESIGN	34.84	106.3	* C-N	11940.0	99.4	DESIGN	34.84

PANEL: PANEL H1-M | OC DEVICE TYPE: Breaker | ENCLOSURE: NEMA 1 | MAINS(A): MLO | CONTINUOUS(A): 225
LOCATION: MAIN ELEC RM | DEVICE FAMILY: Bolt On | MOUNTING: Surface | WIRING: 3-Phase 4-Wire | AIC RATING(A): 0
FED FROM: MSB | VOLTAGE: 480/277 | FAULT CURRENT(A): 27164

OC AMPS P	NOTES	DESCRIPTION	DEMAND CODE	VA	CKT	PHASE LOADS VA A	B	C	CKT	VA	DEMAND CODE	DESCRIPTION	NOTES	OC AMPS P
15 3		HP-E/1-4	MOTOR	7150	1	6956			2	13718	MOTOR	HP-H/1-13		25 3
″		″		-	3		6956		4	-		″		″
″		″		-	5			6956	6	-		″		″
15 3		HP-E/1-5	MOTOR	7150	7	6956			8	13718	MOTOR	HP-I/1-14		25 3
″		″		-	9		6956		10	-		″		″
″		″		-	11			6956	12	-		″		″
15 3		HP-E/1-7	MOTOR	7150	13	5127			14	8231	MOTOR	CRAC 1-1		15 3
″		″		-	15		5127		16	-		″		″
″		″		-	17			5127	18	-		″		″
25 3		HP-H/1-8	MOTOR	13718	19	7316			20	8231	MOTOR	CRAC 1-2		15 3
″		″		-	21		7316		22	-		″		″
″		″		-	23			7316	24	-		″		″
20 3		HP-G/1-9	MOTOR	13136	25	10198			26	17459	MOTOR	CWP-1		30 3
″		″		-	27		10198		28	-		″		″
″		″		-	29			10198	30	-		″		″
20 3		HP-G/1-12	MOTOR	13136	31	10198			32	17459	MOTOR	CWP-2		30 3
″		″		-	33		10198		34	-		″		″
″		″		-	35			10198	36	-		″		″
15 3		HWP-1	MOTOR	2494	37	831			38	0	SPARE	SPARE		20 1
″		″		-	39		831		40	0	SPARE	SPARE		20 1
″		″		-	41			831	42	0	SPARE	SPARE		20 1

ALL CONNECTED	KVA	MAX PH AMPS	* PHASE TOTALS	VA	AMPS	BUS TOTALS	KVA
TOTAL CONNECTED	142.75	171.7	* A-N	47582.9	171.7	CONNECTED	142.75
TOTAL DEMAND	142.75	171.7	* B-N	47582.9	171.7	DEMAND	142.75
TOTAL DESIGN	142.75	171.7	* C-N	47582.9	171.7	DESIGN	142.75

PANEL: PANEL LB-2 | OC DEVICE TYPE: Breaker | ENCLOSURE: NEMA 1 | MAINS(A): MLO | CONTINUOUS(A): 100
LOCATION: BLDG 'B' ART STORAGE | DEVICE FAMILY: Bolt On | MOUNTING: Surface | WIRING: 3-Phase 4-Wire | AIC RATING(A): 0
FED FROM: B-LB1 | VOLTAGE: 208/120 | FAULT CURRENT(A): 479

OC AMPS P	NOTES	DESCRIPTION	DEMAND CODE	VA	CKT	PHASE LOADS VA A	B	C	CKT	VA	DEMAND CODE	DESCRIPTION	NOTES	OC AMPS P
20 1		RCPT- B-103	RECEPTA	540	1	1040			2	500	GEN	AUTO-DOOR		20 1
20 1		RCPT- B-103	RECEPTA	540	3		1260		4	720	RECEPTA	RCPT- B-101		20 1
20 1		RCPT- B-103	RECEPTA	720	5			1440	6	720	RECEPTA	RCPT- B-101		20 1
20 1		RCPT- B-103	RECEPTA	360	7	1440			8	1080	RECEPTA	RCPT- B-101		20 1
20 1		RCPT- B-103	RECEPTA	360	9		1260		10	900	RECEPTA	RCPT- B-101		20 1
20 1		DED RCPT- B-103	RECEPTA	540	11			1440	12	900	RECEPTA	RCPT- B-101		20 1
20 1		DED RCPT- B-103	RECEPTA	540	13	1040			14	500	GEN	PRJTR SCREEN		20 1
20 1		DED RCPT- B-103	RECEPTA	540	15		1040		16	500	GEN	PRJTR & PRJTR LIFT		20 1
20 1		DED RCPT- B-103	RECEPTA	540	17			1040	18	500	GEN	SECTIONAL DOOR		20 1
20 1		DED RCPT- B-103	RECEPTA	540	19	1102			20	1123	MOTOR	EF-1		15 2
20 1		PROJECTION SCREEN	RECEPTA	500	21		1062		22	-		″		″
20 1		PROJECTOR&PROJ LIFT	RECEPTA	500	23			1300	24	800	~~LIGHTIN~~	~~TRACK LIGHTING ART~~ CU 1-1		20 1
20 1		ROOF RCPT	RECEPTA	360	25	1160			26	800	~~LIGHTIN~~	~~TRACK LIGHTING ART~~		20 1
20 1	Water Heater	~~IRRIGATION CONTROL~~	GEN	500	27		500		28	0	SPARE	SPARE Display Cases		20 1
20 1		SPARE	SPARE	0	29			0	30	0	SPARE	SPARE Display Cases		20 1
20 1		SPARE	SPARE	0	31	0			32	0	SPARE	SPARE		20 1
20 1		SPARE	SPARE	0	33		0		34	0	SPARE	SPARE track Lighting		20 1
20 1		SPARE	SPARE	0	35			0	36	0	SPARE	SPARE — track lighting		20 1
20 1		SPARE	SPARE	0	37	0			38	0	~~SPARE~~	~~SPARE~~ seat wall lights		20 1
20 1		SPARE	SPARE	0	39		0		40	0	~~SPARE~~	~~SPARE~~		20 1
20 1		SPARE	SPARE	0	41			0	42	0	SPARE	SPARE		20 1

ALL CONNECTED	KVA	MAX PH AMPS	* PHASE TOTALS	VA	AMPS	BUS TOTALS	KVA
TOTAL CONNECTED	16.12	48.2	* A-N	5790.7	48.2	CONNECTED	16.12
TOTAL DEMAND	15.67	47.9	* B-N	5131.9	42.7	DEMAND	15.67
TOTAL DESIGN	16.07	49.5	* C-N	5220.0	43.5	DESIGN	16.07

PANEL: PANEL H2-M | OC DEVICE TYPE: Breaker | ENCLOSURE: NEMA 1 | MAINS(A): MLO | CONTINUOUS(A): 250
LOCATION: 2ND FLR ELEC RM | DEVICE FAMILY: Bolt On | MOUNTING: Surface | WIRING: 3-Phase 4-Wire | AIC RATING(A): 0
FED FROM: MSB | VOLTAGE: 480/277 | FAULT CURRENT(A): 12511

OC AMPS P	NOTES	DESCRIPTION	DEMAND CODE	VA	CKT	PHASE LOADS VA A	B	C	CKT	VA	DEMAND CODE	DESCRIPTION	NOTES	OC AMPS P
20 3		HP-G/2-6	MOTOR	11639	1	8314			2	13302	MOTOR	RHP-F/7		25 3
″		″		-	3		8314		4	-		″		″
″		″		-	5			8314	6	-		″		″
20 3		HP-G/2-7	MOTOR	11639	7	8314			8	13302	MOTOR	RHP-F/8		25 3
″		″		-	9		8314		10	-		″		″
″		″		-	11			8314	12	-		″		″
20 3		HP-G/2-8	MOTOR	11639	13	18263			14	43149	MOTOR	CT-1		100 3
″		″		-	15		18263		16	-		″		″
″		″		-	17			18263	18	-		″		″
20 3		HP-G/2-9	MOTOR	11639	19	4711			20	2494	MOTOR	EF-3		15 3
″		″		-	21		4711		22	-		″		″
″		″		-	23			4711	24	-		″		″
25 3		RHP-F/5	MOTOR	13302	25	5265			26	2494	MOTOR	EF-4		15 3
″		″		-	27		5265		28	-		″		″
″		″		-	29			5265	30	-		″		″
25 3		RHP-F/6	MOTOR	13302	31	5265			32	2494	MOTOR	EF-5		15 3
″		″		-	33		5265		34	-		″		″
″		″		-	35			5265	36	-		″		″
20 1		SPARE	SPARE	0	37	0			38	0	SPARE	SPARE		20 1
20 1		SPARE	SPARE	0	39		0		40	0	SPARE	SPARE		20 1
20 1		SPARE	SPARE	0	41			0	42	0	SPARE	SPARE		20 1

ALL CONNECTED	KVA	MAX PH AMPS	* PHASE TOTALS	VA	AMPS	BUS TOTALS	KVA
TOTAL CONNECTED	150.40	180.9	* A-N	50132.5	180.9	CONNECTED	150.40
TOTAL DEMAND	150.40	180.9	* B-N	50132.5	180.9	DEMAND	150.40
TOTAL DESIGN	150.40	180.9	* C-N	50132.5	180.9	DESIGN	150.40

RFI-020

PANEL: PANEL L1A | OC DEVICE TYPE: Breaker | ENCLOSURE: NEMA 1 | MAINS(A): ~~MLO~~ Main Breaker | CONTINUOUS(A): 100
LOCATION: MAIN ELEC RM | DEVICE FAMILY: Bolt On | MOUNTING: Surface | WIRING: 3-Phase 4-Wire | AIC RATING(A): 0
FED FROM: B-DPB | VOLTAGE: 208/120 | FAULT CURRENT(A): 498

OC AMPS P	NOTES	DESCRIPTION	DEMAND CODE	VA	CKT	PHASE LOADS VA A	B	C	CKT	VA	DEMAND CODE	DESCRIPTION	NOTES	OC AMPS P
20 1		VENDING MACHINE	RECEPTA	1000	1	1240			2	240	MOTOR	ACU 1-1 & ACU 1-2		15 1
20 1		VENDING MACHINE	RECEPTA	1000	3		1500		4	500	GEN	~~SUBWOOFER~~		20 1
20 1		VENDING MACHINE	RECEPTA	1000	5			1500	6	500	GEN	PRJTR & PRJTR LIFT		20 1
20 1		ELEC AUX POWER	RECEPTA	540	7	1440			8	900	RECEPTA	RCPT-A-123		20 1
20 1		TELEVISION	RECEPTA	800	9		1700		10	900	RECEPTA	RCPT-A-123		20 1
20 1		RCPT-RESTRM/CONV	RECEPTA	900	11			1440	12	540	RECEPTA	RCPT-A-123		20 1
20 1		RCPT-ELEC/MECH. ROOM	RECEPTA	900	13	1440			14	540	MOTOR	CP-1		20 1
20 1		RCPT-A-117	RECEPTA	720	15		1220		16	500	GEN	WH-1		20 1
20 1		RCPT-A-117	RECEPTA	540	17			1140	18	600	GEN	~~BMS PANEL~~ Boiler		20 1
20 1		RCPT-A-121	RECEPTA	900	19	1400			20	500	GEN	~~FACP~~ FSD		20 1
20 1		RCPT-A-121	RECEPTA	900	21		1200		22	300	GEN	FSD		20 1
20 1		RCPT-A-121	RECEPTA	720	23			1260	24	540	RECEPTA	~~EXTERIOR RCPT~~ FSD		20 1
20 1		~~SUBWOOFER~~	GEN	500	25	1300			26	800	GEN	TAMPER SWITCHES		20 1
20 1		PRJTR & PRJTR LIFT	GEN	500	27		500		28	0	SPARE	SPARE		20 1
20 1		~~SPARE~~ exterior	SPARE	0	29			0	30	0	SPARE	SPARE		20 1
20 1		~~SPARE~~ phone	SPARE	0	31	0			32	0	SPARE	SPARE		20 1
20 1		~~SPARE~~ ticket machine	SPARE	0	33		0		34	0	SPARE	SPARE		20 1
20 1		SPARE	SPARE	0	35			0	36	0	SPARE	SPARE		20 1
20 1		~~SPARE~~ FACP	SPARE	0	37	0			38	0	SPARE	SPARE		20 1
20 1		SPARE	SPARE	0	39		0		40	0	SPARE	SPARE		20 1
20 1		SPARE	SPARE	0	41			0	42	0	SPARE	SPARE		20 1

ALL CONNECTED	KVA	MAX PH AMPS	* PHASE TOTALS	VA	AMPS	BUS TOTALS	KVA
TOTAL CONNECTED	18.28	56.8	* A-N	6820.6	56.8	CONNECTED	18.28
TOTAL DEMAND	16.88	53.0	* B-N	6120.0	51.0	DEMAND	16.88
TOTAL DESIGN	16.88	53.0	* C-N	5340.0	44.5	DESIGN	16.88

PANEL: PANEL HB | OC DEVICE TYPE: Breaker | ENCLOSURE: NEMA 1 | MAINS(A): MLO | CONTINUOUS(A): 225
LOCATION: BLDG 'B' ELEC RM | DEVICE FAMILY: Bolt On | MOUNTING: Surface | WIRING: 3-Phase 4-Wire | AIC RATING(A): 0
FED FROM: MSB | VOLTAGE: 480/277 | FAULT CURRENT(A): 10082

OC AMPS P	NOTES	DESCRIPTION	DEMAND CODE	VA	CKT	PHASE LOADS VA A	B	C	CKT	VA	DEMAND CODE	DESCRIPTION	NOTES	OC AMPS P
20 1		LIGHTS 1ST FLOOR	LIGHTIN	2117	1	4290			2	6518	MOTOR	RHP-B/1		15 3
20 1		LIGHTS 1ST FLOOR	LIGHTIN	2015	3		4188		4	-		″		″
20 1		LIGHTS 1ST FLOOR	LIGHTIN	3022	5			5195	6	-		″		″
20 1		LIGHTS 1ST FLOOR	LIGHTIN	1426	7	5999			8	13718	MOTOR	RHP-F/2		25 3
20 1		LIGHTS 1ST FLOOR	LIGHTIN	3599	9		8172		10	-		″		″
20 1		SITE LIGHTING	LIGHTIN	4156	11			8729	12	-		″		″
20 1		SITE LIGHTING	LIGHTIN	4375	13	8255			14	11639	MOTOR	RHP-E/3		20 3
20 1		SITE LIGHTING	LIGHTIN	3937	15		7817		16	-		″		″
20 1		SITE LIGHTING	LIGHTIN	2845	17			6725	18	-		″		″
20 1		SITE LIGHTING	LIGHTIN	831	19	5404			20	13718	MOTOR	RHP-F/4		25 3
20 1		SPARE	SPARE	0	21		4573		22	-		″		″
20 1		SPARE	SPARE	0	23			4573	24	-		″		″
20 1		SPARE	SPARE	0	25	0			26	0	SPARE	SPARE		20 1
20 1		SPARE	SPARE	0	27		0		28	0	SPARE	SPARE		20 1
20 1		SPARE	SPARE	0	29			0	30	0	SPARE	SPARE		20 1
20 1		SPARE	SPARE	0	31	0			32	0	SPARE	SPARE		20 1
20 1		SPARE	SPARE	0	33		0		34	0	SPARE	SPARE		20 1
20 1		SPARE	SPARE	0	35			0	36	0	SPARE	SPARE		20 1
20 1		SPARE	SPARE	0	37	11458			38	34373	NONE	B-XFMR TB-PRI	XFMR TB	125 3
20 1		SPARE	SPARE	0	39		11458		40	-		″		″
20 1		~~SPARE~~ LCP-HB	SPARE	0	41			11458	42	-		″		″

ALL CONNECTED	KVA	MAX PH AMPS	* PHASE TOTALS	VA	AMPS	BUS TOTALS	KVA
TOTAL CONNECTED	108.29	131.3	* A-N	36250.8	130.8	CONNECTED	108.29
TOTAL DEMAND	100.24	121.4	* B-N	35667.1	128.7	DEMAND	100.24
TOTAL DESIGN	108.06	131.2	* C-N	36386.8	131.3	DESIGN	108.06

PANEL: PANEL L1B | OC DEVICE TYPE: Breaker | ENCLOSURE: NEMA 1 | MAINS(A): MLO | CONTINUOUS(A): 100
LOCATION: CORRIDOR | DEVICE FAMILY: Bolt On | MOUNTING: Flush | WIRING: 3-Phase 4-Wire | AIC RATING(A): 0
FED FROM: B-DPB | VOLTAGE: 208/120 | FAULT CURRENT(A): 476

OC AMPS P	NOTES	DESCRIPTION	DEMAND CODE	VA	CKT	PHASE LOADS VA A	B	C	CKT	VA	DEMAND CODE	DESCRIPTION	NOTES	OC AMPS P
20 1		RCPT A-100	RECEPTA	720	1	1874			2	2309	MOTOR	HP-B/1-1		15 2
20 1		RCPT A-100	RECEPTA	720	3		1874		4	-		″		″
20 1		RCPT A-100	RECEPTA	720	5			1874	6	2309	MOTOR	HP-B/1-2		15 2
20 1		AUTO DOOR	GEN	500	7	1654			8	-		″		″
20 1		COILING GRILLE	GEN	500	9		1654		10	2309	MOTOR	HP-A/1-3		15 2
20 1		RCPT A-102, 104	RECEPTA	900	11			2054	12	-		″		″
20 1		DED RCPT	RECEPTA	180	13	180			14	0	SPARE	SPARE		20 1
20 1		DED RCPT	RECEPTA	180	15		180		16	0	SPARE	SPARE		20 1
20 1		RCPT A-102, 104	RECEPTA	720	17			720	18	0	SPARE	SPARE		20 1
20 1		RCPT A-108, 112, 114	RECEPTA	900	19	900			20	0	SPARE	SPARE		20 1
20 1		RCPT A-108, 112, 114	RECEPTA	720	21		720		22	0	SPARE	SPARE		20 1
20 1		RCPT A-108, 112, 114	RECEPTA	720	23			720	24	0	SPARE	SPARE		20 1
20 1		SPARE	SPARE	0	25	0			26	0	SPARE	SPARE		20 1
20 1		SPARE	SPARE	0	27		0		28	0	SPARE	SPARE		20 1
20 1		SPARE	SPARE	0	29			0	30	0	SPARE	SPARE		20 1
20 1		SPARE	SPARE	0	31	0			32	0	SPARE	SPARE		20 1
20 1		SPARE	SPARE	0	33		0		34	0	SPARE	SPARE		20 1
20 1		SPARE	SPARE	0	35			0	36	0	SPARE	SPARE		20 1
20 1		SPARE	SPARE	0	37	0			38	0	SPARE	SPARE		20 1
20 1		SPARE	SPARE	0	39		0		40	0	SPARE	SPARE		20 1
20 1		SPARE	SPARE	0	41			0	42	0	SPARE	SPARE		20 1

ALL CONNECTED	KVA	MAX PH AMPS	* PHASE TOTALS	VA	AMPS	BUS TOTALS	KVA
TOTAL CONNECTED	14.41	44.7	* A-N	4608.8	38.4	CONNECTED	14.41
TOTAL DEMAND	14.41	44.7	* B-N	4428.8	36.9	DEMAND	14.41
TOTAL DESIGN	14.41	44.7	* C-N	5368.8	44.7	DESIGN	14.41

PANEL "H1"	PANEL "LB1"
PANEL "H1M"	PANEL "LB2"
PANEL "H2M"	PANEL "L1A"
PANEL "HB"	PANEL "L1B"

APPROVAL STAMP
IDENTIFICATION STAMP
DIVISION OF THE STATE ARCHITECT
APPL 02- 107417
AC [signature] FLS TH SS AL
DATE: 12/21/05

NO.	ISSUED FOR	DATE
1	DSA APPROVAL SET	12/08/05

REGISTERED PROFESSIONAL ENGINEER JOSEPH W. FAY E 10951 EXP 6/30/07 ELECTRICAL STATE OF CALIFORNIA
Date Signed 12/06/05
CERTIFIED BY

K M D
KAPLAN McLAUGHLIN DIAZ
ARCHITECTURE PLANNING
222 VALLEJO SAN FRANCISCO, CA 94111
(415) 398-5191 FAX (415) 394-7158

ALFATECH
120 MONTGOMERY STREET, SUITE 715 415-403-3000
SAN FRANCISCO, CALIFORNIA 94104 FAX: 415-788-6040
SAN JOSE · NEW JERSEY · SINGAPORE · AUSTRALIA
AT Project No. 204231

SOLANO COMMUNITY COLLEGE

SCCD
VALLEJO CENTER
Contract # A003.6123.01.V1

PROJECT NO. 419-201 | DATE 12-08-05

PANELBOARD SCHEDULES

AS BUILTS

E5.02

PLOT DATE:

COPYRIGHT © 2004 BY KMD (KAPLAN McLAUGHLIN DIAZ). ALL RIGHTS RESERVED.

PANEL: PANEL L1C — LOCATION: CORRIDOR — FED FROM: B-DPB
OC DEVICE TYPE: Breaker — DEVICE FAMILY: Bolt On
ENCLOSURE: NEMA 1 — MOUNTING: Flush — VOLTAGE: 208/120
MAINS(A): MLO — WIRING: 3-Phase 4-Wire
CONTINUOUS(A): 100 — AIC RATING(A): 0 — FAULT CURRENT(A): 461

OC AMPS P	NOTES	DESCRIPTION	DEMAND CODE	VA	CKT	A	B	C	CKT	VA	DEMAND CODE	DESCRIPTION	NOTES	OC AMPS P
20 1		RCPT A-122	RECEPTA	540	1	1694			2	2309	MOTOR	HP-A/1-6		15 2
20 1		RCPT A-122	RECEPTA	720	3		1874		4	-		"		"
20 1		RCPT A-122	RECEPTA	540	5			2318	6	3557	MOTOR	HP-C/1-10		30 2
20 1		RCPT A-121	RECEPTA	360	7	2138			8	-		"		"
20 1		RCPT A-121	RECEPTA	360	9		1514		10	2309	MOTOR	HP-A/1-11		15 2
20 1		RCPT A-121	RECEPTA	360	11			1514	12	-		"		"
20 1		RCPT A-121	RECEPTA	360	13	900			14	540	RECEPTA	RCPT A-124, 130		20 1
20 1		RCPT A-121	RECEPTA	360	15		720		16	360	RECEPTA	RCPT A-124, 130		20 1
20 1		RCPT A-121	RECEPTA	360	17			860	18	500	GEN	PRJTR & PRJTR LIFT		20 1
20 1		RCPT A-121	RECEPTA	360	19	860			20	500	GEN	~~SUBWOOFER~~		20 1
20 1		RCPT A-121	RECEPTA	360	21		900		22	540	RECEPTA	RCPT A-122		20 1
20 1		RCPT A-121	RECEPTA	360	23			360	24	0	SPARE	SPARE		20 1
20 1		RCPT A-121	RECEPTA	360	25	360			26	0	SPARE	SPARE		20 1
20 1		RCPT A-121	RECEPTA	360	27		360		28	0	SPARE	SPARE		20 1
20 1		RCPT A-121	RECEPTA	360	29			360	30	0	SPARE	SPARE		20 1
20 1		SPARE	SPARE	0	31	0			32	0	SPARE	SPARE		20 1
20 1		SPARE	SPARE	0	33		0		34	0	SPARE	SPARE		20 1
20 1		SPARE	SPARE	0	35			0	36	0	SPARE	SPARE		20 1
20 1		SPARE	SPARE	0	37	0			38	0	SPARE	SPARE		20 1
20 1		SPARE	SPARE	0	39		0		40	0	SPARE	SPARE		20 1
20 1		SPARE	SPARE	0	41			0	42	0	SPARE	SPARE		20 1

ALL CONNECTED	KVA	MAX PH AMPS	* PHASE TOTALS	VA	AMPS	BUS TOTALS	KVA
TOTAL CONNECTED	16.73	49.7	* A-N	5963.7	49.7	CONNECTED	16.73
TOTAL DEMAND	16.73	49.7	* B-N	5368.8	44.7	DEMAND	16.73
TOTAL DESIGN	16.73	49.7	* C-N	5424.8	45.2	DESIGN	16.73

PANEL: PANEL L2B — LOCATION: CORRIDOR — FED FROM: B-DPB
OC DEVICE TYPE: Breaker — DEVICE FAMILY: Bolt On
ENCLOSURE: NEMA 1 — MOUNTING: Flush — VOLTAGE: 208/120
MAINS(A): MLO — WIRING: 3-Phase 4-Wire
CONTINUOUS(A): 100 — AIC RATING(A): 0 — FAULT CURRENT(A): 449

OC AMPS P	NOTES	DESCRIPTION	DEMAND CODE	VA	CKT	A	B	C	CKT	VA	DEMAND CODE	DESCRIPTION	NOTES	OC AMPS P
20 1		LAB BENCHES	RECEPTA	800	1	1300			2	500	GEN	~~PH MONITOR PANEL~~		20 1
20 1		LAB BENCHES	RECEPTA	800	3		1300		4	500	GEN	~~PH MONITOR PANEL~~		20 1
20 1		LAB BENCHES	RECEPTA	800	5			1300	6	500	GEN	~~PH MONITOR PANEL~~		20 1
20 1		LAB BENCHES	RECEPTA	800	7	1300			8	500	GEN	~~PH MONITOR PANEL~~		20 1
20 1		LAB BENCHES	RECEPTA	800	9		1300		10	500	GEN	SMART PANEL		20 1
20 1		LAB BENCHES	RECEPTA	800	11			1300	12	500	GEN	FUMEHOOD		20 1
20 1		LAB BENCHES	RECEPTA	800	13	1300			14	500	GEN	FUMEHOOD		20 1
20 1		LAB BENCHES	RECEPTA	800	15		1300		16	500	GEN	FUMEHOOD		20 1
20 1		LAB BENCHES	RECEPTA	800	17			1520	18	720	RECEPTA	PEDESTAL/COUNTER RCP		20 1
20 1		WIREMOLD	RECEPTA	900	19	1620			20	720	RECEPTA	PEDESTAL/COUNTER RCP		20 1
20 1		WIREMOLD	RECEPTA	900	21		1620		22	720	RECEPTA	PEDESTAL/COUNTER RCP		20 1
20 1		WIREMOLD	RECEPTA	900	23			1260	24	360	RECEPTA	CONV RCPT		20 1
20 1		WIREMOLD	RECEPTA	900	25	900			26	0	~~SPARE~~	~~SPARE~~ *Fumehood*		20 1
20 1		WIREMOLD	RECEPTA	900	27		900		28	0	SPARE	SPARE		20 1
20 1		WIREMOLD	RECEPTA	900	29			900	30	0	~~SPARE~~	~~SPARE~~ > *Fumehood*		20 1
20 1		WIREMOLD	RECEPTA	900	31	900			32	0	~~SPARE~~	~~SPARE~~		20 1
20 1		PROJECTOR	GEN	500	33		500		34	0	SPARE	SPARE		20 1
20 1		~~SPEAKER/SUBWOOFER~~	GEN	500	35			500	36	0	SPARE	SPARE		20 1
20 1		SPARE	SPARE	0	37	0			38	0	SPARE	SPARE		20 1
20 1		SPARE	SPARE	0	39		0		40	0	SPARE	SPARE		20 1
20 1		SPARE	SPARE	0	41			0	42	0	SPARE	SPARE		20 1

ALL CONNECTED	KVA	MAX PH AMPS	* PHASE TOTALS	VA	AMPS	BUS TOTALS	KVA
TOTAL CONNECTED	21.02	61.0	* A-N	7320.0	61.0	CONNECTED	21.02
TOTAL DEMAND	18.01	51.0	* B-N	6920.0	57.6	DEMAND	18.01
TOTAL DESIGN	18.01	51.0	* C-N	6780.0	56.5	DESIGN	18.01

PANEL: PANEL L1D — LOCATION: CORRIDOR — FED FROM: B-DPB
OC DEVICE TYPE: Breaker — DEVICE FAMILY: Bolt On
ENCLOSURE: NEMA 1 — MOUNTING: Flush — VOLTAGE: 208/120
MAINS(A): MLO — WIRING: 3-Phase 4-Wire
CONTINUOUS(A): 100 — AIC RATING(A): 0 — FAULT CURRENT(A): 458

△1

OC AMPS P	NOTES	DESCRIPTION	DEMAND CODE	VA	CKT	A	B	C	CKT	VA	DEMAND CODE	DESCRIPTION	NOTES	OC AMPS P
20 1		RCPT A-125	RECEPTA	360	1	720			2	360	RECEPTA	RCPT A-129		20 1
20 1		RCPT A-125	RECEPTA	360	3		720		4	360	RECEPTA	RCPT A-129		20 1
20 1		RCPT A-125	RECEPTA	360	5			720	6	360	RECEPTA	RCPT A-129		20 1
20 1		RCPT A-125	RECEPTA	360	7	720			8	360	RECEPTA	RCPT A-129		20 1
20 1		RCPT A-125	RECEPTA	360	9		720		10	360	RECEPTA	RCPT A-129		20 1
20 1		RCPT A-125	RECEPTA	360	11			720	12	360	RECEPTA	RCPT A-129		20 1
20 1		RCPT A-125	RECEPTA	360	13	720			14	360	RECEPTA	RCPT A-129		20 1
20 1		RCPT A-125	RECEPTA	360	15		720		16	360	RECEPTA	RCPT A-129		20 1
20 1		RCPT A-125	RECEPTA	360	17			720	18	360	RECEPTA	RCPT A-129		20 1
20 1		RCPT A-125	RECEPTA	360	19	720			20	360	RECEPTA	RCPT A-129		20 1
20 1		RCPT A-125	RECEPTA	360	21		720		22	360	RECEPTA	RCPT A-129		20 1
20 1		RCPT A-125	RECEPTA	360	23			720	24	360	RECEPTA	RCPT A-129		20 1
20 1		SUBWOOFER	GEN	500	25	1000			26	500	GEN	SUBWOOFER		20 1
20 1		PRJTR & PRJTR LIFT	GEN	500	27		1000		28	500	GEN	PRJTR & PRJTR LIFT		20 1
20 1		RCPT A-127/*127A*	RECEPTA	*900*	29			720	30	360	RECEPTA	RCPT A-127		20 1
30 1		RCPT A-127*A*	RECEPTA	*800*	31	720			32	360	RECEPTA	RCPT A-127		20 1
30 1		RCPT A-127*A*	RECEPTA	*800*	33		360		34	0	SPARE	SPARE		20 1
30 1		RCPT A-127*A*	RECEPTA	*800*	35			360	36	0	SPARE	SPARE		20 1
20 1		SPARE	SPARE	0	37	0			38	0	SPARE	SPARE		20 1
20 1		SPARE	SPARE	0	39		0		40	0	SPARE	SPARE		20 1
20 1		SPARE	SPARE	0	41			0	42	0	SPARE	SPARE		20 1

ALL CONNECTED	KVA	MAX PH AMPS	* PHASE TOTALS	VA	AMPS	BUS TOTALS	KVA
TOTAL CONNECTED	12.80	38.3	* A-N	4600.0	38.3	CONNECTED	12.80
TOTAL DEMAND	12.35	37.2	* B-N	4240.0	35.3	DEMAND	12.35
TOTAL DESIGN	12.35	37.2	* C-N	3960.0	33.0	DESIGN	12.35

PANEL: PANEL L2C — LOCATION: SCIENCE LAB A-211 — FED FROM: B-DPB
OC DEVICE TYPE: Breaker — DEVICE FAMILY: Bolt On
ENCLOSURE: NEMA 1 — MOUNTING: Flush — VOLTAGE: 208/120
MAINS(A): MLO — WIRING: 3-Phase 4-Wire
CONTINUOUS(A): 100 — AIC RATING(A): 0 — FAULT CURRENT(A): 478

OC AMPS P	NOTES	DESCRIPTION	DEMAND CODE	VA	CKT	A	B	C	CKT	VA	DEMAND CODE	DESCRIPTION	NOTES	OC AMPS P
20 1		LAB BENCHES	RECEPTA	800	1	1300			2	500	GEN	PH MONITOR PANELS		20 1
20 1		LAB BENCHES	RECEPTA	800	3		1300		4	500	GEN	~~PH MONITOR PANELS~~ *Pedestals A-209*		20 1
20 1		LAB BENCHES	RECEPTA	800	5			1300	6	500	GEN	~~PH MONITOR PANELS~~ > *autoclave*		20 1
20 1		LAB BENCHES	RECEPTA	800	7	1300			8	500	GEN	~~PH MONITOR PANELS~~		20 1
20 1		LAB BENCHES	RECEPTA	800	9		1300		10	500	GEN	PEDESTAL/COUNTER RCP		20 1
20 1		LAB BENCHES	RECEPTA	800	11			1300	12	500	GEN	PEDESTAL/COUNTER RCP		20 1
20 1		LAB BENCHES	RECEPTA	800	13	1800			14	1000	GEN	CHARGING STATION		30 1
20 1		LAB BENCHES	RECEPTA	800	15		1800		16	1000	GEN	CHARGING STATION		30 1
20 1		WIREMOLD	RECEPTA	900	17			1900	18	1000	GEN	CHARGING STATION		30 1
20 1		WIREMOLD	RECEPTA	900	19	1800			20	900	RECEPTA	WIREMOLD		20 1
20 1		WIREMOLD	RECEPTA	900	21		1800		22	900	RECEPTA	WIREMOLD		20 1
20 1		WIREMOLD	RECEPTA	900	23			1900	24	1000	RECEPTA	ICE MAKER		20 1
20 1		WIREMOLD	RECEPTA	900	25	1900			26	1000	RECEPTA	REFRIGERATOR		20 1
20 1		PROJECTOR	GEN	500	27		1400		28	900	RECEPTA	WIREMOLD		20 1
20 1		SPEAKER/SUBWOOFER	GEN	500	29			1400	30	900	RECEPTA	WIREMOLD		20 1
20 1		SMART PANEL	GEN	500	31	1000			32	500	RECEPTA	SPECIAL OUTLET		20 1
20 1		FUMEHOOD	GEN	500	33		1000		34	500	RECEPTA	SPECIAL OUTLET		20 1
20 1		FUMEHOOD	GEN	500	35			1040	36	540	RECEPTA	CONV. RCPT		20 1
20 1		SPARE > *FumehooD*	SPARE	0	37	0			38	0	SPARE	SPARE > *Fumehood*		20 1
20 1		SPARE	SPARE	0	39		0		40	0	SPARE	SPARE		20 1
20 1		SPARE *outlet @84"*	SPARE	0	41			0	42	0	SPARE	SPARE		20 1

ALL CONNECTED	KVA	MAX PH AMPS	* PHASE TOTALS	VA	AMPS	BUS TOTALS	KVA
TOTAL CONNECTED	26.54	75.8	* A-N	9100.0	75.8	CONNECTED	26.54
TOTAL DEMAND	22.52	63.2	* B-N	8600.0	71.6	DEMAND	22.52
TOTAL DESIGN	22.52	63.2	* C-N	8840.0	73.6	DESIGN	22.52

PANEL: PANEL L2A — LOCATION: 2ND FLR ELEC RM — FED FROM: B-DPB
OC DEVICE TYPE: Breaker — DEVICE FAMILY: Bolt On
ENCLOSURE: NEMA 1 — MOUNTING: Surface — VOLTAGE: 208/120
MAINS(A): MLO — WIRING: 3-Phase 4-Wire
CONTINUOUS(A): 300 — AIC RATING(A): 0 — FAULT CURRENT(A): 471

OC AMPS P	NOTES	DESCRIPTION	DEMAND CODE	VA	CKT	A	B	C	CKT	VA	DEMAND CODE	DESCRIPTION	NOTES	OC AMPS P
20 1		MICROWAVE	REC	800	1	1340			2	540	REC	RCPT-OFFICE/CORRIDOR		20 1
20 1		DISHWASHER	REC	1000	3		1540		4	540	REC	RCPT-OFFICE/CORRIDOR		20 1
20 1		COFFEE MAKER	REC	1200	5			1740	6	540	REC	RCPT-OFFICE/CORRIDOR		20 1
20 1		REFRIGERATOR	REC	1000	7	1540			8	540	REC	RCPT-OFFICE/CORRIDOR		20 1
20 1		STAFF LOUNGE	REC	720	9		1080		10	360	REC	RCPT-OFFICE/CORRIDOR		20 1
20 1		MTG RM RCPT	REC	720	11			1080	12	360	REC	RCPT-OFFICE/CORRIDOR		20 1
20 1		MTG RM RCPT	REC	720	13	1440			14	720	REC	RCPT-CLASS RM A-242		20 1
20 1		MTG RM FLR BOX RCPT	REC	1080	15		1800		16	720	REC	RCPT-CLASS RM A-242		20 1
20 1		MTG RM FLR BOX RCPT	REC	1200	17			1920	18	720	REC	RCPT-CLASS RM A-242		20 1
20 1		OFFICE	REC	720	19	1220			20	500	GEN	PRJTR & PRJTR LIFT		20 1
20 1		OFFICE	REC	720	21		1220		22	500	GEN	~~SUBWOOFER~~ *Spare*		20 1
20 1		OFFICE	REC	720	23			1080	24	360	REC	RCPT CLASS RM A-242		20 1
20 1		OFFICE	REC	720	25	1440			26	720	REC	RCPT CLASS RM A-213		20 1
20 1		OFFICE	REC	720	27		1440		28	720	REC	RCPT CLASS RM A-213		20 1
20 1		OFFICE	REC	720	29			1260	30	540	REC	RCPT CLASS RM A-213		20 1
20 1		COPY/WORK ALCOVE	REC	1000	31	1500			32	500	GEN	PRJTR & PRJTR LIFT		20 1
20 1		COPY/WORK ALCOVE	REC	1000	33		1500		34	500	GEN	~~SUBWOOFER~~ *Spare*		20 1
20 1		RCPT-CORR/REST RM	REC	900	35			1260	36	360	REC	RCPT CLASS RM A-213		20 1
30 1 (*20*) △		RCPT-DATA ROOM	REC	500	37	1220			38	720	REC	RCPT CLASS RM A-215		20 1
30 1 (*20*)		RCPT-DATA ROOM	REC	500	39		1220		40	720	REC	RCPT CLASS RM A-215		20 1
30 1 (*20*)		RCPT-DATA ROOM	REC	500	41			1040	42	540	REC	RCPT CLASS RM A-215		20 1
25 2		CU 1-1	MOTOR	3536	43	3546			44	3557	MOTOR	HP-C/2-1		30 2
"		"		-	45		3546		46	-		"		"
25 2		CU 1-2	MOTOR	3536	47			3546	48	3557	MOTOR	HP-C/2-2		30 2
"		"		-	49	3546			50	-		"		"
15 2		EF-2	MOTOR	1123	51		2340		52	3557	MOTOR	HP-C/2-3		30 2
"		"		-	53			2340	54	-		"		"
15 2		CU-1	MOTOR	666	55	2111			56	3557	MOTOR	HP-C/2-4		30 2
"		"		-	57		2111		58	-		"		"
15 2		CU-2	MOTOR	666	59			2111	60	3557	MOTOR	HP-C/2-5		30 2
"		"		-	61	2111			62	-		"		"
25 2		CU 2-1	MOTOR	3536	63		1888		64	120	MOTOR	ACU 2-1		0 1
"		"		-	65			3546	66	3557	~~MOTOR~~	~~HP-C/2-10~~ *spare → Dolphin pump*		30 2
15 1		EF-6 & EF-7	MOTOR	200	67	1978			68	-		"		"
20 1		~~FSD~~	GEN	1000	69		1000		70	0	SPARE	SPARE		20 1
20 1		RCPT CORRIDR/REST RM	REC	1080	71			1080	72	0	SPARE	SPARE		20 1
20 1		SUBWOOFER	GEN	500	73	860			74	360	REC	RCPT CLASS RM A-215		20 1
20 1		RCPT CLASS RM A-217	REC	360	75		860		76	500	GEN	~~SUBWOOFER~~ *Spare*		20 1
20 1		PRJTR & PRJTR LIFT	GEN	500	77			1000	78	500	GEN	PRJTR & PRJTR LIFT		20 1
20 1		RCPT CLASS RM A-217	REC	720	79	720			80	0	SPARE	SPARE } *FSD*		20 1
20 1		RCPT CLASS RM A-213	REC	720	81		720		82	0	SPARE	SPARE } *FSD*		20 1
20 1		RCPT CLASS RM A-213	REC	540	83			540	84	0	SPARE	SPARE } *FSD*		20 1
20 1		~~FAEP~~ *FABP*	GEN	500	85	500			86	0	SPARE	~~SPARE~~ *A-214 Light*		20 1
20 1		ROOF RCPT	RECEPTA	720	87		720		88	0	SPARE	SPARE		20 1
20 1		~~ROOF RCPT~~ *Lobby/Bath*	RECEPTA	720	89			720	90	0	SPARE	SPARE		20 1
20 1		SPARE	SPARE	0	91	0			92	0	SPARE	~~SPARE~~ *Control Voltage Motor Starters*		20 1
20 1		~~SPARE~~ *Roof GFI*	SPARE	0	93		0		94	0	SPARE	SPARE		20 1
20 1		SPARE	SPARE	0	95			0	96	0	SPARE	SPARE		20 1
20 1		SPARE	SPARE	0	97	0			98	0	SPARE	SPARE		20 1
20 1		SPARE	SPARE	0	99		0		100	0	SPARE	SPARE		20 1
20 1		SPARE	SPARE	0	101			0	102	0	SPARE	SPARE		20 1
0 1		SPACE	SPACE	0	103	0			104	0	SPACE	SPACE		0 1
0 1		SPACE	SPACE	0	105		0		106	0	SPACE	SPACE		0 1
0 1		SPACE	SPACE	0	107			0	108	0	SPACE	SPACE		0 1
0 1		SPACE	SPACE	0	109	0			110	0	SPACE	SPACE		0 1
0 1		SPACE	SPACE	0	111		0		112	0	SPACE	SPACE		0 1
0 1		SPACE	SPACE	0	113			0	114	0	SPACE	SPACE		0 1
0 1		SPACE	SPACE	0	115	0			116	0	SPACE	SPACE		0 1
0 1		SPACE	SPACE	0	117		0		118	0	SPACE	SPACE		0 1
0 1		SPACE	SPACE	0	119			0	120	0	SPACE	SPACE		0 1
0 1		SPACE	SPACE	0	121	0			122	0	SPACE	SPACE		0 1
0 1		SPACE	SPACE	0	123		0		124	0	SPACE	SPACE		0 1
0 1		SPACE	SPACE	0	125			0	126	0	SPACE	SPACE		0 1

ALL CONNECTED	KVA	MAX PH AMPS	* PHASE TOTALS	VA	AMPS	BUS TOTALS	KVA
TOTAL CONNECTED	72.32	209.0	* A-N	25094.6	209.0	CONNECTED	72.32
TOTAL DEMAND	61.99	182.2	* B-N	23003.1	191.6	DEMAND	61.99
TOTAL DESIGN	61.99	182.2	* C-N	24340.0	202.7	DESIGN	61.99

PANEL "L1C"	PANEL "L2B"
PANEL "L1D"	PANEL "L2C"
PANEL "L2A"	

APPROVAL STAMP
IDENTIFICATION STAMP
DIVISION OF THE STATE ARCHITECT
APPL 01- 107417
AC *[signature]* FLS *TH* SS *NL*
DATE: *12/21/05*

NO.	ISSUED FOR	DATE
1	DSA APPROVAL SET	12/08/05

REGISTERED PROFESSIONAL ENGINEER — JOSEPH W. FAY — E 10951 — EXP. 6/30/07 — ELECTRICAL — STATE OF CALIFORNIA
Date Signed 12/06/05
CERTIFIED BY

K M D
KAPLAN McLAUGHLIN DIAZ
ARCHITECTURE PLANNING
222 VALLEJO SAN FRANCISCO, CA 94111
(415) 398-5191 FAX (415) 394-7158

ALFATECH
120 MONTGOMERY STREET, SUITE 715 415-403-3000
SAN FRANCISCO, CALIFORNIA 94104 FAX: 415-788-6040
SAN JOSE · NEW JERSEY · SINGAPORE · AUSTRALIA
AT Project No. 204231

SOLANO COMMUNITY COLLEGE

SCCD
VALLEJO CENTER
Contract # A003.6123.01.V1

PROJECT NO. 419-201 — DATE 12-08-05

PANELBOARD SCHEDULES

AS BUILTS

E5.03

PLOT DATE:

COPYRIGHT © 2004 BY KMD (KAPLAN McLAUGHLIN DIAZ). ALL RIGHTS RESERVED.

G:\000\000-000\ACAD\SHEETS\

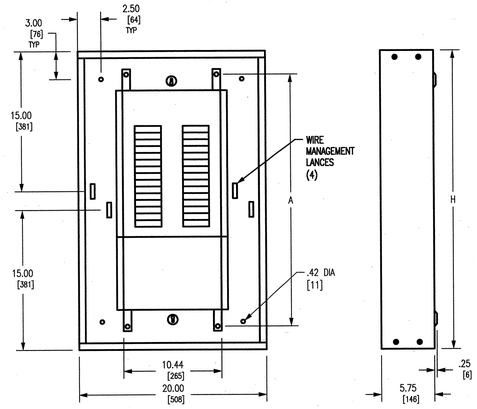

TYPICAL BOX WITH INTERIOR

TYPICAL BOX SIDE VIEW

TYPICAL PANELBOARD DETAIL (8)
SCALE: NONE

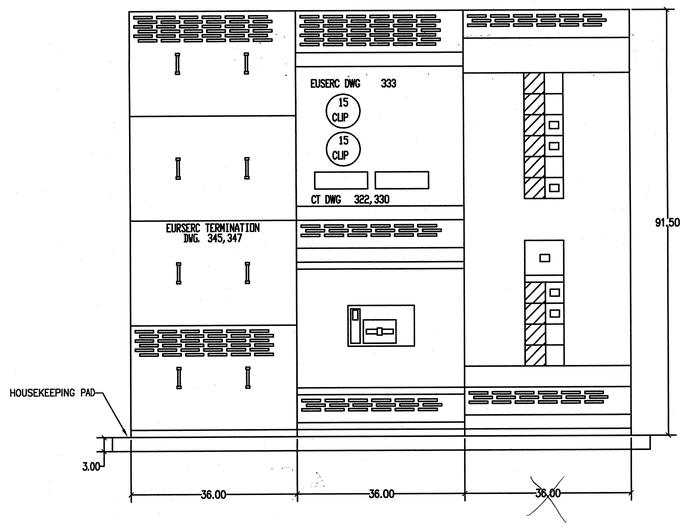

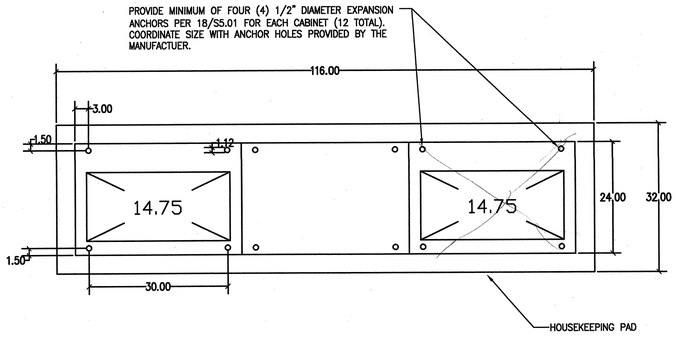

MAIN SWITCHBOARD ELEVATION AND PLAN DETAIL (8)
WEIGHT = 2600 LBS
SCALE: NONE

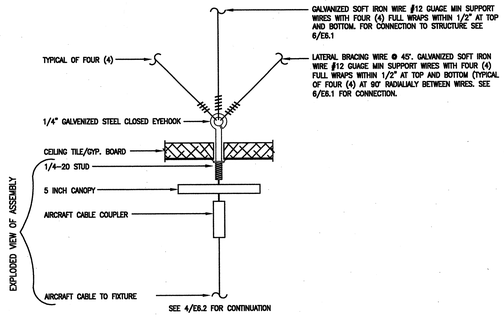

FIXTURE TYPE F1A, 1B, 1C, F2A, 2B MOUNTING DETAIL FOR CONNECTION OFF T-BAR GRIP OR IN GYPSUM BOARD CEILING TYPES (5)
SCALE: NONE

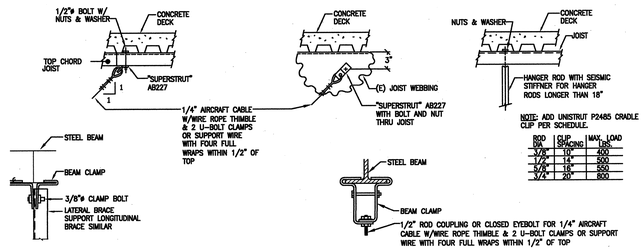

ROD DIA	SLIP SPACING	MAX. LOAD LBS.
3/8"	10"	400
1/2"	14"	500
5/8"	18"	550
3/4"	20"	800

NOTE:
1. ATTACHMENTS TO OVERHEAD STRUCTURE SHALL BE MADE IN ACCORDANCE WITH STRUCTURAL ENGINEERS REQUIREMENTS AND WEIGHT LIMITATIONS. ALL ATTACHMENT METHODS TO STRUCTURE SHALL BE SUBMITTED TO ARCHITECT AND STRUCTURAL ENGINEER FOR REVIEW. (POWDER DRIVEN ANCHORS ARE NOT ACCEPTABLE WITHOUT STRUCTURAL ENGINEER'S APPROVAL.)
2. PROVIDE LOCKNUTS ON ALL COUPLINGS.

TYPICAL CONNECTION TO STRUCTURE DETAIL (6)
SCALE: NONE

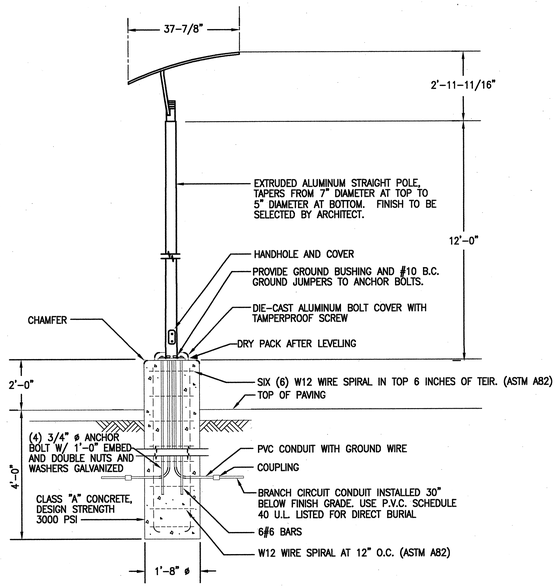

FIXTURE TYPE F14 MOUNTING DETAIL (7)
SCALE: NONE

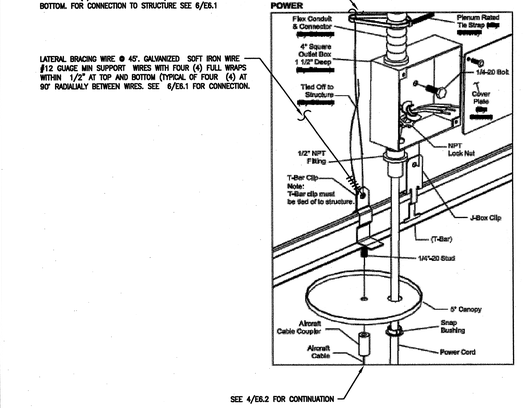

FIXTURE TYPE F1A, 1B, 1C, F2A, 2B MOUNTING DETAIL FOR POWER CONNECTION ON T-BAR GRID (1)
SCALE: NONE

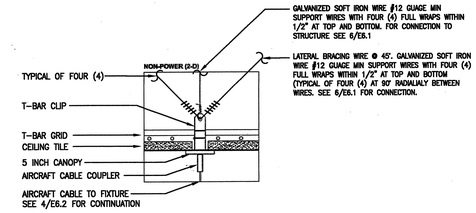

FIXTURE TYPE F1A, 1B, 1C, F2A, 2B MOUNTING DETAIL FOR NON-POWER CONNECTION ON T-BAR GRID (2)
SCALE: NONE

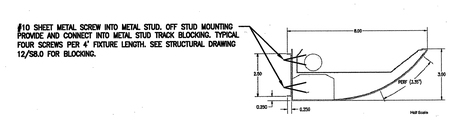

FIXTURE TYPE F20 MOUTNING DETAIL (3)
SCALE: NONE

RF1-089

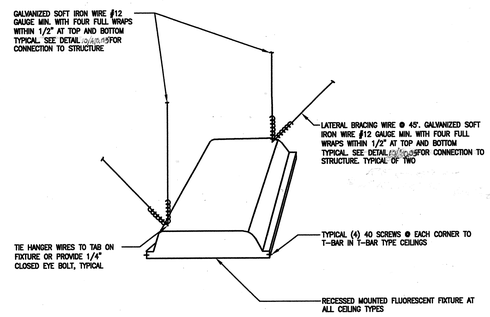

FIXTURE TYPE F3, F3A, AND F4 MOUTNING DETAIL (4)
SCALE: NONE

APPROVAL STAMP
IDENTIFICATION STAMP
DIVISION OF THE STATE ARCHITECT
APP# 107417
AC FLS FH SS RL
DATE: 12/21/05

NO.	ISSUED FOR	DATE
1	DSA APPROVAL SET	12/08/05

JOSEPH W. SCHMIDT
E 10990
EXP. 6/30/07
ELECTRICAL
STATE OF CALIFORNIA
Date Signed 12/06/05
CERTIFIED BY

K M D
KAPLAN McLAUGHLIN DIAZ
ARCHITECTURE PLANNING
222 VALLEJO SAN FRANCISCO, CA 94111
(415) 398-5191 FAX (415) 394-7158

ALFATECH
120 MONTGOMERY STREET, SUITE 715 415-403-3000
SAN FRANCISCO, CALIFORNIA 94104 FAX: 415-788-8040
SAN JOSE • NEW JERSEY • SINGAPORE • AUSTRALIA
AT Project No. 20431

SOLANO COMMUNITY COLLEGE

SCCD
VALLEJO CENTER
Contract # A003.6123.01.V1

PROJECT NO.	DATE
419-201	12-08-05

ELECTRICAL DETAILS

AS BUILTS

E6.01

PLOT DATE:
COPYRIGHT © 2004 BY KMD (KAPLAN McLAUGHLIN DIAZ). ALL RIGHTS RESERVED.

G:\000\000-000\ACAD\SHEETS\

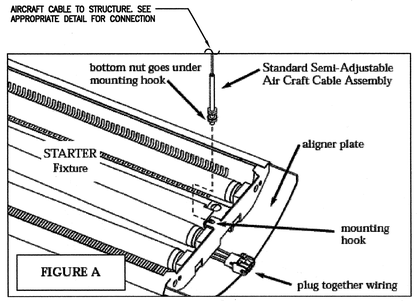

TYPICAL ARICRAFT CABLE CONNECTION TO LIGHTING FIXTURE TYPE F1A, 1B, 1C, F2A, 2B. SCALE: NONE (4)

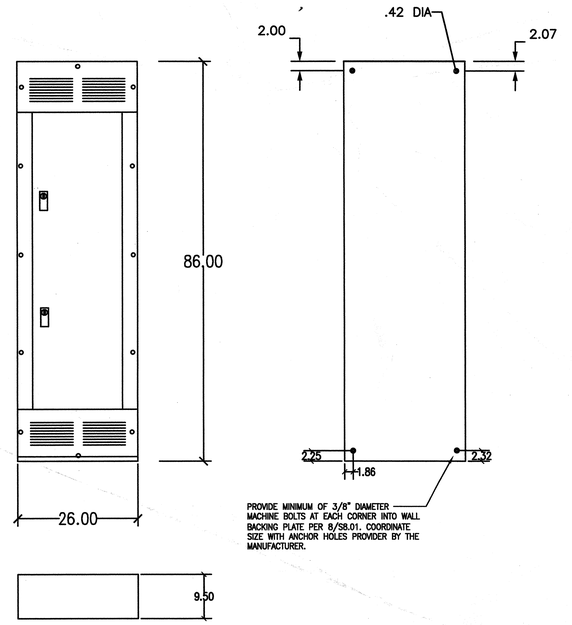

DISTRIBUTION PANEL DP-B ELEVATION AND PLAN DETAIL
WEIGHT = 550 LBS SCALE: NONE (1)

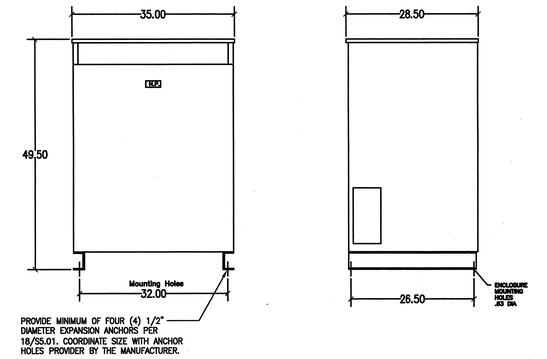

TRANSFORMER T1 ELEVATION DETAILS
WEIGHT = 1700 LBS SCALE: NONE (2)

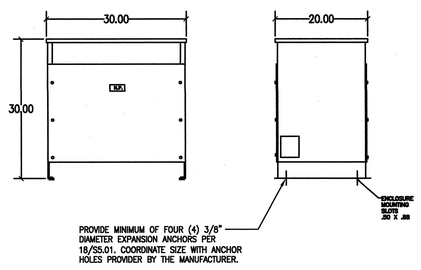

TRANSFORMER TB ELEVATION DETAILS
WEIGHT = 504 LBS SCALE: NONE (3)

APPROVAL STAMP
IDENTIFICATION STAMP
DIVISION OF THE STATE ARCHITECT
APPL 02- 107417
AC FLS TH SS VL
DATE: 12/21/05

NO.	ISSUED FOR	DATE
1	DSA APPROVAL SET	12/08/05

REGISTERED PROFESSIONAL ENGINEER
JOSEPH W. [illegible]
E 18951
EXP. 6/30/07
ELECTRICAL
STATE OF CALIFORNIA

Date Signed 12/06/05

CERTIFIED BY

K M D
KAPLAN McLAUGHLIN DIAZ
ARCHITECTURE PLANNING
222 VALLEJO SAN FRANCISCO, CA 94111
(415) 398-5191 FAX (415) 394-7158

ALFATECH
120 MONTGOMERY STREET, SUITE 715 415-403-3000
SAN FRANCISCO, CALIFORNIA 94104 FAX: 415-788-6040
SAN JOSE • NEW JERSEY • SINGAPORE • AUSTRALIA
AT Project No. 204231

SOLANO COMMUNITY COLLEGE

SCCD
VALLEJO CENTER
Contract # A003.6123.01.V1

PROJECT NO.	DATE
419-201	12-08-05

ELECTRICAL DETAILS

AS BUILTS

E6.02

PLOT DATE:

COPYRIGHT © 2004 BY KMD (KAPLAN McLAUGHLIN DIAZ). ALL RIGHTS RESERVED.

SOLANO COMMUNITY COLLEGE
VALLEJO CENTER

345 COLUMBUS PARKWAY
VALLEJO, CA 94591

FIRE ALARM SUPPLIER
DIVERSIFIED FIRE PRODUCTS
180 GRAND AVENUE, SUITE 1545
OAKLAND, CA 94612
JIM SCHLOFFEL
(510) 588-3100
CONT. LIC# 627565

ELECTRICAL CONTRACTOR
LONG ELECTRIC CO.
870 D NAPA VALLEY CORPORATE WAY
NAPA, CA 94558
RANDY PETERSON
(707) 252-3512
CONT. LIC #: 580809

GENERAL NOTES

1. CONTRACTOR TO VERIFY ALL DIMENSIONS AND CONDITIONS AT THE JOB SITE BEFORE COMMENCING WORK AND TO REPORT ANY DISCREPANCIES TO THE ENGINEER PRIOR TO CONSTRUCTION.
2. CONSTRUCTION SAFETY: ALL WORK SHALL CONFORM TO THE REQUIREMENTS OF OSHA AND CAL-OSHA.
3. THE ELECTRICAL CONTRACTOR MUST PROVIDE THE FIRE ALARM CONTRACTOR WITH ACCURATE MARKED UP DRAWINGS SHOWING ALL JUNCTION BOXES, TERMINAL CABINETS, DEVICE LOCATIONS, ETC. FOR THE USE IN MAKING "RECORD DRAWINGS". THE FIRE ALARM COMPANY WILL REVISE DRAWINGS ACCORDINGLY.
4. ALARM DEVICE CABLE AND WIRE SHALL BE RECOMMENDED BY THE ALARM EQUIPMENT MANUFACTURER AND SHALL MEET THE NATIONAL ELECTRICAL CODE AND LOCAL AND STATE ELECTRICAL CODES. ANY DEVIATION FROM THE SPECIFIED CABLE TYPES SHALL BE APPROVED BY DIVERSIFIED FIRE PRODUCTS IN WRITING PRIOR TO INSTALLATION.
5. CONDUIT ROUTING AND CONDUIT SIZE SHALL BE DETERMINED BY THE CONTRACTOR, IN CONJUNCTION WITH (1999 NEC), AND INDICATED ON THE RECORD DRAWINGS. CONDUIT FILL SHALL NOT EXCEED 40%.
6. FIRE ALARM WIRING SHALL BE INSTALLED PER (1999 NEC) AND THE LOCAL AUTHORITY HAVING JURISDICTION.
7. SMOKE DETECTORS SHALL BE MOUNTED IN ACCORDANCE WITH NFPA 72, 1996. DETECTORS SHALL NOT BE LOCATED IN A DIRECT AIR-FLOW NOR CLOSER THAN 3 FEET OF ANY AIR SUPPLY DIFFUSER.
8. ALL WORK SHALL CONFORM TO THE REQUIREMENTS OF THE APPLICABLE CODE, PORTIONS OF THE NATIONAL FIRE PROTECTION ASSOCIATION (NFPA) STANDARDS, GUIDES, AND RECOMMENDED PRACTICES LISTED HEREIN:
   a) 1997 UNIFORM BUILDING CODE WITH 2001 CALIFORNIA AMENDMENTS.
   b) 2000 MECHANICAL CODE WITH 2001 CALIFORNIA AMENDMENTS.
   c) 2000 UNIFORM FIRE CODE WITH 2001 CALIFORNIA AMENDMENTS.
   d) 1999 NATIONAL ELECTRIC CODE.
   e) 1999 EDITIONS OF NFPA 72, 90, 92A & 92B.
   f) FINAL RULE OF THE AMERICANS WITH DISABILITIES ACT (ADA) – PUBLIC LAW 101-336.
   g) 1996 ANSI STANDARD A17.1.
   h) ALL COMPONENTS SHALL BE LISTED BY UNDERWRITERS LABORATORIES (UL).
   i) ALL COMPONENTS SHALL BE LISTED BY THE CALIFORNIA STATE FIRE MARSHALL.
9. PRIMARY POWER SOURCE (120VAC) TO FACP AND POWER SUPPLIES MUST BE ON A DEDICATED BRANCH CIRCUIT, FROM THE LINE SIDE OF THE EMERGENCY GENERATOR (IF APPLICABLE), WITH THE DISCONNECTING MEANS MARKED "FIRE ALARM CIRCUIT CONTROL". THE LOCATION OF THE DISCONNECT MUST BE IDENTIFIED AT THE FACP AND POWER SUPPLIES. ALL FIRE ALARM CIRCUIT BREAKERS MUST BE CLEARLY MARKED AND MECHANICALLY SECURED TO PREVENT ANY UNAUTHORIZED TAMPERING.
10. WHEN POWERING UP THE FACP OR REMOTE POWER SUPPLIES BE SURE TO APPLY AC VOLTAGE BEFORE DC VOLTAGE. WHEN POWERING DOWN REMOVE DC SUPPLY BEFORE AC DISCONNECT.
11. ELECTRICAL CONTRACTOR SHALL LABEL ALL DEVICES WITH THEIR ADDRESS OR CIRCUIT NUMBER.
12. PROVIDE WEATHER PROOF NEMA ENCLOSURES TO ALL DEVICES THAT ARE EXPOSED TO THE ENVIRONMENT.
13. DIFFERENTIAL PRESSURE TESTING FOR DUCT DETECTORS MUST BE PERFORMED BY THE MECHANICAL CONTRACTOR AFTER AIR HANDLER SYSTEMS HAVE BEEN BALANCED. A WRITTEN COPY OF THESE TESTS SHALL BE TURNED OVER TO DFP PRIOR TO SYSTEM FINAL.
14. ALL DUCT DETECTORS TO BE INSTALLED PER MANUFACTURER INSTALLATION INSTRUCTION AND ALL APPLICABLE STANDARDS. (SEE NOTE 8 FOR APPLICABLE STANDARDS)
15. ELECTRICAL CONTRACTOR TO PROVIDE ALL CONDUIT, WIRE, BACK BOX, TERMINAL CABINETS, AS REQUIRED TO COMPLETE THE PROJECT.
16. ALL JUNCTION BOXES MUST HAVE RED COVERS, TERMINAL CABINETS MUST BE MARKED "FATC".
17. ALL FIRE ALARM DEVICES MUST BE INSTALLED IN A PROPER BACK BOX. NO DEVICE SHALL BE INSTALLED WITHOUT A BACK BOX.
18. PROVIDE GROUND ROD, OR COLD WATER COPPER PIPE OK IF WATER METER STRAPPED, FOR PROPER GROUNDING OF THE FIRE ALARM PANEL AND REMOTE POWER SUPPLIES.
19. ALL FIRE ALARM CIRCUITS: INITIATING, SIGNALING, AUXILIARY POWER AND CONTROLS ARE TWO WIRE CLASS "B".
20. (CONVENTIONAL HARDWIRED NON-ADDRESSABLE – INITIATING DEVICE CIRCUITS [IDC]) AND (AUDIBLE AND/OR VISUAL – NOTIFICATION APPLIANCE CIRCUITS [NAC]), ARE TWO WIRE CLASS "B". NO T-TAPPING IS ALLOWED ON ANY OF THESE CIRCUITS.
21. (ADDRESSABLE INITIATING AND CONTROL – SIGNALING LINE CIRCUITS [SLC]) ARE TWO WIRE DATA COMMUNICATIONS CIRCUITS. THE NUMBER OF T-TAPS PER CIRCUIT ARE LIMITED ACCORDING TO THE TYPE OF SYSTEM. T-TAPPING SHALL BE LIMITED TO A RATIO OF 1:3 WHEN USING WIRE NUTS.(1 IN/3 OUT) ALL T-TAPS MUST BE LOCATED IN ACCESSIBLE AND MARKED JUNCTION BOXES. DO NOT USE THE TERMINALS OF ANY DEVICE AS A T-TAP POINT. ONLY 4 CONDUCTORS UNDER 1 WIRE NUT, AND ONLY 2 WIRE NUTS USED PER T-TAP. IF A T-TAP EXCEEDS 4 CONDUCTORS, A TERMINAL STRIP LOCATED IN AN ACCESSIBLE TERMINAL CAN SHALL BE USED. ALL WIRES SHALL BE MARKED AS FOLLOWS:
    THE WIRE FEEDING THE T-TAP SHALL BE LABELED: "FROM DEVICE ###"
    THE WIRES LEAVING THE T-TAP SHALL BE LABELED: "TO DEVICE ###"
    THE APPROPRIATE SIZE WIRE NUT MUST BE USED PER THE MANUFACTURES SPECIFICATION.

SHEET SCHEDULE

FA-0.01	=	COVER SHEET
FA-1.01.1	=	BUILDING "B", 1ST FLOOR PLAN – DEVICE LAYOUT
FA-1.01.2	=	BUILDING "A", 1ST FLOOR PLAN – DEVICE LAYOUT
FA-1.02	=	BUILDING "A", 2ND FLOOR PLAN – DEVICE LAYOUT
FA-2.01	=	RISER DIAGRAM AND SYSTEM CALCULATIONS
FA-4.01	=	FIRE ALARM CONTROL PANEL, BPS6A AND REMOTE ANNUNCIATOR DETAILS
FA-4.02	=	DEVICE DETAILS
FA-4.03	=	INSTALLATION AND MOUNTING DETAILS

SCOPE OF WORK

THE SCOPE OF THIS PROJECT IS TO PROVIDE A NEW ADDRESSABLE FIRE ALARM SYSTEM FOR SOLANO COMMUNITY COLLEGE – VALLEJO CENTER AT 345 COLUMBUS PARKWAY, VALLEJO, CA 94591.

THIS FIRE ALARM SYSTEM INCLUDES:

- MANUAL PULL STATIONS.
- ADDRESSABLE SMOKE DETECTORS.
- ADDRESSABLE DUCT SMOKE DETECTORS.
- ADDRESSABLE CONTROL RELAY FOR DOOR HOLDER CONTROL
- ADDRESSABLE CONTROL RELAYS FIRE/SMOKE DAMPER CONTROL.
- ADDRESSABLE CONTROL RELAYS FOR HEAT PUMP SHUTDOWN.
- ADDRESSABLE CONTROL RELAYS FOR ELEVATOR CONTROL.
- ADDRESSABLE MONITOR MODULE FOR ELEVATOR SHUNT POWER SUPERVISION.
- ADDRESSABLE MONITOR MODULES FOR SPRINKLER SYSTEM SUPERVISION.
- AUDIBLE/VISUAL NOTIFICATION APPLIANCES.
- BOOSTER POWER SUPPLIES ACTIVATED VIA SYNCHRONIZATION MODULES.

SEE OPERATIONAL MATRIX FOR MORE SPECIFIC SYSTEM SEQUENCE OF OPERATIONS.

BUILDING INFORMATION

BUILDING OCCUPANCY
E

TYPE OF SYSTEM
(PER NFPA 72, 1999 EDITION)
CENTRAL STATION

FIRE ALARM SYSTEM MONITORING NOTE

AUTOMATIC FIRE ALARM SYSTEMS SHALL TRANSMIT ALARM, SUPERVISORY AND TROUBLE SIGNALS TO AN APPROVED SUPERVISING STATION, AS REQUIRED BY NFPA 72, AND AMMENDED BY ARTICLE 91. THE SUPERVISING STATION SHALL BE LISTED AS EITHER UUFX OR UUJS BY UNDERWRITERS LABORATORY OR SHALL MEET THE REQUIREMENTS OF FACTORY MUTUAL RESEARCH STANDARD 3011. SUPERVISION OF THE SYSTEM AND LEASING OF TELEPHONE LINES SHALL BE ARRANGED BY THE OWNER.

DESIGN NOTES

FIRE ALARM DEVICE LOCATIONS AND QUANTITY PER DSA APPROVAL SET PRODUCED BY ALFATECH CAMBRIDGE, DELTA 1, 12/08/05.

FIRE ALARM SYSTEM OPERATIONAL MATRIX

	FACP ALARM	FACP TROUBLE	FACP SUPERVISORY	ANNUNCIATORS ALARM	ANNUNCIATORS TROUBLE	ANNUNCIATORS SUPERVISORY	ACTIVATE HORNS & STROBES	1ST FLOOR ELEVATOR RECALL	2ND FLOOR ELEVATOR RECALL	ELEVATOR SHUT DOWN	CLOSE FIRE/SMOKE DAMPER	FAN SHUT DOWN	OFF-SITE ALARM	OFF-SITE TROUBLE	OFF-SITE SUPERVISORY
AREA SMOKE DETECTOR	X			X			X						X		
DUCT SMOKE DETECTOR (ADJACENT FSD)	X			X			X				X		X		
DUCT SMOKE DETECTOR @ FAN	X			X			X					X	X		
1ST FLOOR ELEVATOR LOBBY/MACH. RM. SMOKE	X			X			X		X				X		
2ND FLOOR ELEV. LOBBY/ELEV. SHAFT SMOKE	X			X			X	X					X		
HEAT DETECTOR @ ELEV. MACH. RM/SHAFT	X			X			X			X			X		
MANUAL PULL STATION	X			X			X						X		
WATER FLOW	X			X			X						X		
VALVE TAMPER			X			X									X
INITIATING CIRCUIT STYLE B (CLASS B)															
OPEN WIRE		X			X									X	
GROUNDED WIRE		X R			X									X	
SHORTED WIRES	X			X			X						X		
NOTIFICATION CIRCUIT STYLE Y (CLASS B)															
OPEN WIRE		X			X									X	
GROUNDED WIRE		X R			X									X	
SHORTED WIRES		X			X									X	
SIGNALING LINE CIRCUIT STYLE 4 (CLASS B)															
OPEN WIRE		X			X									X	
GROUNDED WIRE		X R			X									X	
WIRE TO WIRE SHORT & OPEN		X			X									X	
WIRE TO WIRE SHORT & GROUND		X			X									X	
OPEN & GROUND		X			X									X	
LOSS OF CARRIER		X			X									X	

R = ALARM RECEIPT CAPABILITY DURING ABNORMAL CONDITIONS IS REQUIRED.

VICINITY MAP

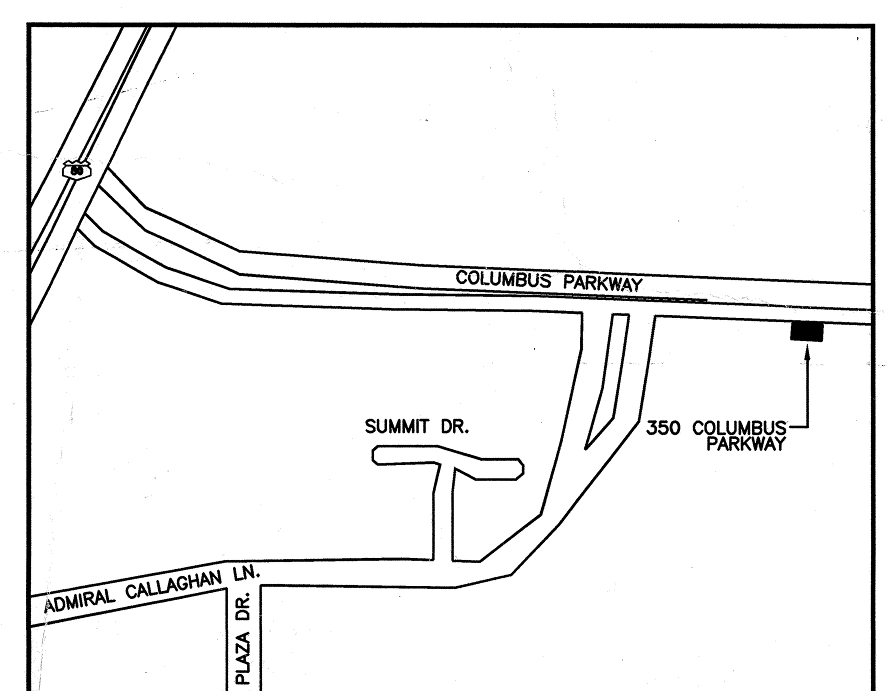

LEGEND

SYMBOL	MODEL #	DESCRIPTION	CSFM #	BACK BOX	MFG.	QTY
FACP	EST-3	FIRE ALARM CONTROL PANEL	7165-1657:186	3-CAB7B	EST	1
	3-LCD	LIQUID CRYSTAL DISPLAY MODULE	7165-1657:186	3-CAB7B	EST	1
	3-LRMF	LOCAL RAIL MODULE FILLER	7165-1657:186	3-CAB7B	EST	2
	3-12/S1GY	12 SWITCHES W/1 GRN & 1 YEL	7165-1657:186	3-CAB7B	EST	1
	3-MODCOMP	MODEM/DIALER (DACT) W/TAP PAGER PROTOCOL	7165-1657:186	3-CAB7B	EST	1
	3-CPU3	CENTRAL PROCESSING UNIT	7165-1657:186	3-CAB7B	EST	1
	3-RS485B	NETWORK COMMUNICATIONS CARD	7165-1657:186	3-CAB7B	EST	1
	3-RS232	RS-232 COMMUNICATIONS CARD	7165-1657:186	3-CAB7B	EST	1
	3-SSDC1	SINGLE SIGNATURE DRIVER CONTROLLER	7165-1657:186	3-CAB7B	EST	1
	3-PPS/M	PRIMARY POWER SUPPLY W/LRM	7165-1657:186	3-CAB7B	EST	1
	3-CAB7B	WALLBOX ONLY	7165-1657:186	3-CAB7B	EST	1
	3-CAB7D	INNER & OUTER DOORS FOR WALLBOX	7165-1657:186	3-CAB7B	EST	1
	3-CHAS7	7 LOCAL RAIL MODULE SPACE – CHASSIS	7165-1657:186	3-CAB7B	EST	1
	BC/1	BATTERY CABINET	–	INCLUDED	EST	1
	TR 24-12B	24AH BATTERY	–	–	TEMPEST	2
	82517	8 AMP TIME DELAY (SLOW BLOW) FUSE	–	–	–	1
	FH	FUSE HOLDER	–	–	–	1
ANN	3-LCDANN	REMOTE ANNUNCIATOR	7120-1657:193	RLCM/B	EST	1
	RLCM/B	FLUSH MOUNT LCD WALLBOX	7120-1657:193	INCLUDED	EST	1
CT2	SIGA-CT2	DUAL INPUT MODULE	7300-1657:121	4" SQ DEEP BOX W/ 1 GANG RING	EST	3
CT1	SIGA-CT1	SINGLE INPUT MODULE	7300-1657:121	4" SQ DEEP BOX W/ 1 GANG RING	EST	2
CC1S	SIGA-CC1S	SYNCHRONIZATION OUTPUT MODULE	7300-1657:121	4" SQ DEEP BOX W/ 2 GANG RING	EST	2
CR	SIGA-CR	ADDRESSABLE CONTROL RELAY	7300-1657:121	4" SQ DEEP BOX W/ 1 GANG RING	EST	14
FH	SIGA-270	ADDRESSABLE SINGLE ACTION PULL STATION	7150-1657:129	4" SQ DEEP BOX W/ 1 GANG RING	EST	9
SD	SIGA-IPHS	ADDRESSABLE ION/PHOTO SMOKE DETECTOR	7272-1657:126	–	EST	21
	SIGA-SB4	STANDARD BASE	7300-1657:120	4" OCTAGON BOX	EST	21
HD F	SIGA-HRS	ADDRESSABLE HEAT DETECTOR	7270-1657:125	–	EST	2
	SIGA-SB4	STANDARD BASE	7300-1657:120	4" OCTAGON BOX	EST	2
DD	SIGA-SD	SUPER DUCT DETECTOR	3242-1657:223	INCLUDED	EST	56
	SD-TXX	SAMPLING TUBE	–	–	EST	56
DH	1504-AQN5	DOOR HOLDER (24VAC/DC OR 120VAC/DC)	3550-1501:137	SINGLE GANG	EST	9
R	PAM-1	INTERPOSING RELAY	7300-1004:101	4" SQ DEEP BOX W/ 1 GANG RING	AIR PRODUCTS	13
BPS6A	BPS6A	BOOSTER POWER SUPPLY	7300-1657:229	INCLUDED	EST	2
	TR 7.5-12	7AH BATTERY	–	–	TEMPEST	4
15 H	G1RF-HDVM	HORN/STROBE 15CD	7125-1657:202	SINGLE GANG	EST	9
30 H	G1RF-HDVM	HORN/STROBE 30CD	7125-1657:202	SINGLE GANG	EST	1
75 H	G1RF-HDVM	HORN/STROBE 75CD	7125-1657:202	SINGLE GANG	EST	6
110 H	G1RF-HDVM	HORN/STROBE 110CD	7125-1657:202	SINGLE GANG	EST	13
15 H	G1RF-VM	STROBE SET @ 15CD	7125-1657:218	SINGLE GANG	EST	14
30 H	G1RF-VM	STROBE SET @ 30CD	7125-1657:218	SINGLE GANG	EST	6
75 H	G1RF-VM	STROBE SET @ 75CD	7125-1657:218	SINGLE GANG	EST	5
WP H H	757-1A-T	WEATHERPROOF HORN	7135-1657:188	757A-WB	EST	6
	757A-WB	WEATHERPROOF BOX	–	INCLUDED	EST	6
VT	BY OTHERS	VALVE TAMPER SWITCH	–	–	–	3
WF	BY OTHERS	WATER FLOW SWITCH	–	–	–	2
FSD	BY OTHERS	FIRE SMOKE DAMPER	–	–	–	45
B H	BY OTHERS	FIRE SPRINKLER WATERFLOW BELL	–	–	–	1
	EOL	END OF LINE RESISTOR				

ADDRESS CIRCUIT LEGEND

LRM CARD#
PANEL#
DEVICE ADDRESS#
PPCCDDDD

SIGNAL CIRCUIT LEGEND

SIGNAL TYPE
DEVICE #
X1-#
CIRCUIT #

STYLE/CIRCUIT DESIGNATIONS

(PER NFPA 72, 1999 EDITION)

SLC = STYLE 4 (CLASS B)
IDC = STYLE B (CLASS B)
NAC = STYLE Y (CLASS B)

CABLE LEGEND

A = DATA COMMUNICATIONS CABLE
#16 AWG TWISTED PAIR
3,900 FEET MAXIMUM DISTANCE
.5uF MAXIMUM CAPACITANCE
79 OHMS MAXIMUM RESISTANCE
MAXIMUM OF 124 T-TAPS PER LOOP
SEE GENERAL NOTE # 21

D = ANNUNCIATOR DATA
#16 AWG TWISTED PAIR
NO T-TAPS ALLOWED

F = IDC CABLE
2#14 THWN (WH,GN)
NO T-TAPS ALLOWED

M = MISC MAKE-UP CABLE
#16 AWG TWISTED PAIR
NO T-TAPS ALLOWED

N = NOTIFICATION CABLE
2#12 THWN (BU,BN)
NO T-TAPS ALLOWED

P = 24VDC POWER
2#12 THWN (BK,RD)
NO T-TAPS ALLOWED

APPROVAL STAMP
IDENTIFICATION STAMP
DIVISION OF THE STATE ARCHITECT
APPL 02- 107417
AC ______ FLS ______ SS ______
DATE: ______

NO.	ISSUED FOR		DATE
1	SUBMITTAL PACKAGE	SHP	2/23/07

CERTIFIED BY

K M D
KAPLAN McLAUGHLIN DIAZ
ARCHITECTURE · PLANNING
222 VALLEJO
SAN FRANCISCO, CA 94111
(415) 398-5191
FAX (415) 394-7158

DFP JOB#: 606-120
CONTRACTORS LICENSE #627565
DIVERSIFIED FIRE PRODUCTS
ENGINEERED FIRE ALARM SYSTEMS
PHONE (408) 370-3770
FAX (408) 370-0654
502 VANDELL WAY
SUITE E
CAMPBELL, CA 95008
PHONE (510) 588-3100
FAX (510) 588-3120
180 GRAND AVENUE
SUITE 1545
OAKLAND, CA 94612
JIM SCHLOFFEL

SOLANO COMMUNITY COLLEGE

SCCD
VALLEJO CENTER
Contract # A003.6123.01.V1

PROJECT NO. DFP JOB#606-120
DATE SEE ABOVE

COVER SHEET

FA-0.01

PLOT DATE:

COPYRIGHT © 2004 BY KMD (KAPLAN McLAUGHLIN DIAZ). ALL RIGHTS RESERVED.

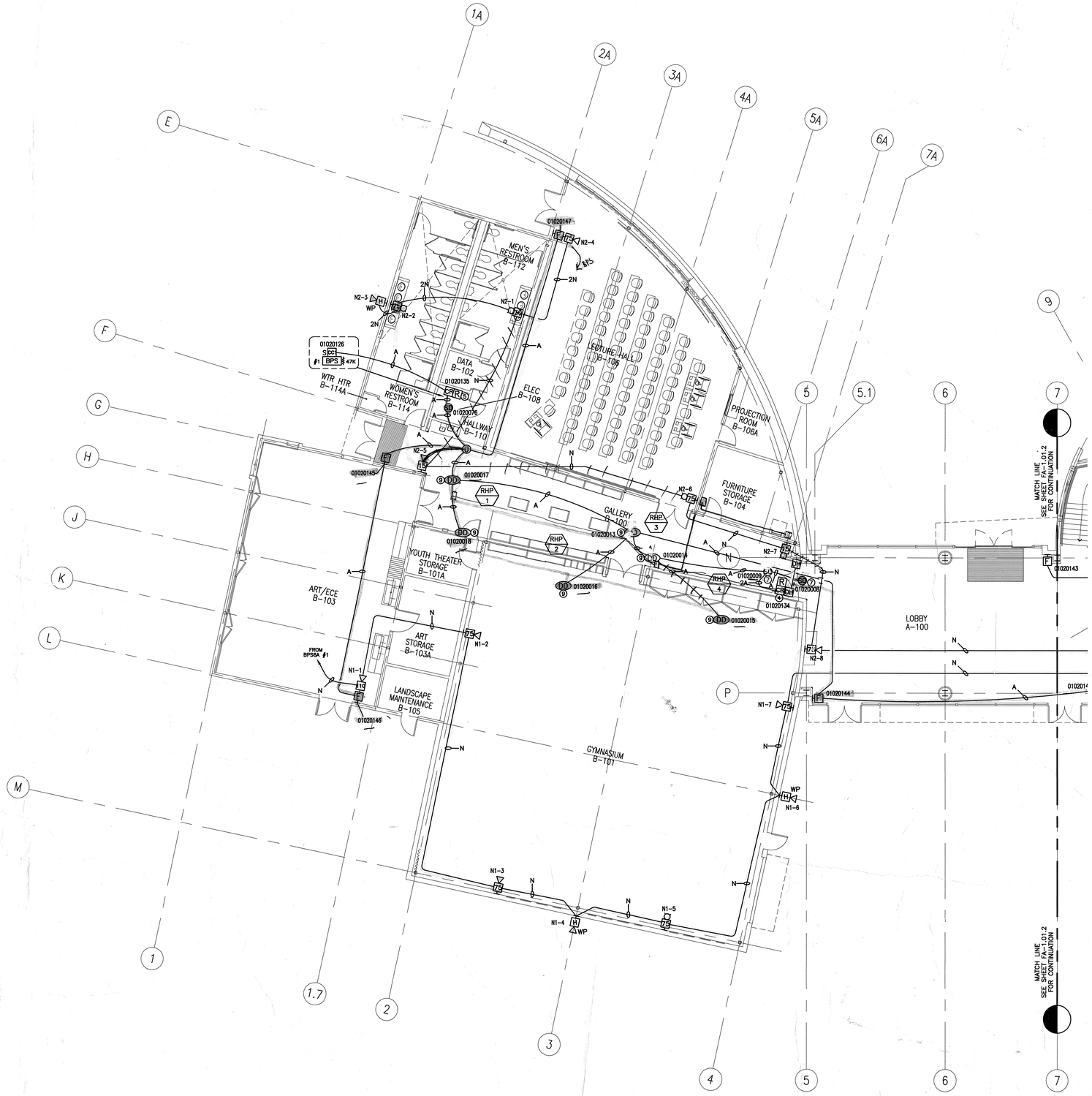

BUILDING "B", 1ST FLOOR PLAN – DEVICE LAYOUT

5' 0 5' 10' 20'

SCALE : 1/8" = 1'-0"

DESIGN NOTES

FIRE ALARM DEVICE LOCATIONS AND QUANTITY PER DSA APPROVAL SET PRODUCED BY ALFATECH CAMBRIDGE, DELTA 1, 12/08/05.

LEGEND

SYMBOL	DESCRIPTION
FACP	FIRE ALARM CONTROL PANEL
ANN	REMOTE ANNUNCIATOR
DI	DUAL INPUT MODULE
SI	SINGLE INPUT MODULE
SCI-O	SYNCHRONIZATION OUTPUT MODULE
CR	ADDRESSABLE CONTROL RELAY
PH	ADDRESSABLE SINGLE ACTION PULL STATION
SD	ADDRESSABLE ION/PHOTO SMOKE DETECTOR
HD	ADDRESSABLE HEAT DETECTOR
DD	DUCT SMOKE DETECTOR
DH	DOOR HOLDER (24VAC/DC OR 120VAC/DC)
R	INTERPOSING RELAY
BPS6A	BOOSTER POWER SUPPLY
XXH	HORN/STROBE (XX DENOTES CANDELA)
XXH	STROBE (XX DENOTES CANDELA)
WP H	WEATHERPROOF HORN
VT	VALVE TAMPER SWITCH
WF	WATER FLOW SWITCH
FSD	FIRE SMOKE DAMPER
B H	FIRE SPRINKLER WATERFLOW BELL
	END OF LINE RESISTOR

ADDRESS CIRCUIT LEGEND

LRM CARD# / PANEL# — DEVICE ADDRESS#

PPCCDDDD

NAC CIRCUIT LEGEND

SIGNAL TYPE — DEVICE # — XX1–# — CIRCUIT #

GENERAL SHEET NOTES

1. ADDRESSES FOR SPRINKLER SYSTEM MONITOR MODULES SHALL BE ADDRESSED AS FOLLOWS:
   LOW ADDRESS # = "WATERFLOW SWITCH"
   HIGH ADDRESS # = "VALVE TAMPER SWITCH"

KEYED NOTES

1. CONTROL RELAY FOR ELEVATOR RECALL. COORDINATE WITH ELEVATOR CONTROLS CONTRACTOR.
2. CONTROL RELAY FOR ELEVATOR ALTERNATE RECALL. COORDINATE WITH ELEVATOR CONTROLS CONTRACTOR.
3. CONTROL RELAY FOR ELEVATOR POWER SHUNT TRIP. MONITOR MODULE FOR SHUNT TRIP POWER SUPERVISION.
4. CONTROL RELAY FOR MAGNETIC DOOR HOLDER CONTROL.
5. CONTROL RELAY FOR FAN CONTROL.
6. CONTROL RELAY FOR FIRE/SMOKE DAMPER CONTROL.
7. MOUNT SMOKE DETECTOR AS SHOWN IN THE "DOOR CONTROL SMOKE DETECTOR MOUNTING DETAIL" ON SHEET FA-4.03.
8. MOUNT DUCT SMOKE DETECTOR UPSTREAM AND WITHIN 5' OF FIRE/SMOKE DAMPER. SEE MOUNTING DETAIL ON SHEET FA-4.03. AIRFLOW FOR DUCT SMOKE DETECTOR SHALL MEET MANUFACTURE'S SUGGESTED SPECIFICATIONS. SEE GENERAL NOTES #13 & #14 SHEET FA-0.01.
9. AIRFLOW FOR DUCT SMOKE DETECTOR SHALL MEET MANUFACTURE'S SUGGESTED SPECIFICATIONS. SEE GENERAL NOTES #13 & #14 SHEET FA-0.01.
10. ELEVATOR SHAFT DETECTION PER ANSI/ASME A17.1-1990. ELEVATOR SHAFT SMOKE DETECTORS AND HEAT DETECTORS MUST BE ACCESSIBLE.
11. HEAT DETECTOR IN ELEVATOR SHAFT AND ELEVATOR MACHINE ROOM TO BE LOCATED 2 FEET FROM SPRINKLER HEAD.
12. WIRING TO EXTERIOR VALVE TAMPERS SHALL BE RATED FOR WET LOCATIONS. (DIRECT BURIAL CABLE)

CABLE LEGEND

- A = DATA COMMUNICATIONS CABLE
  #16 AWG TWISTED PAIR
  3,900 FEET MAXIMUM DISTANCE
  .5uF MAXIMUM CAPACITANCE
  79 OHMS MAXIMUM RESISTANCE
  MAXIMUM OF 124 T-TAPS PER LOOP
  SEE GENERAL NOTE # 21
- D = ANNUNCIATOR DATA
  #16 AWG TWISTED PAIR
  NO T-TAPS ALLOWED
- F = IDC CABLE
  2#14 THWN (WH,GN)
  NO T-TAPS ALLOWED
- M = MISC MAKE-UP CABLE
  #16 AWG TWISTED PAIR
  NO T-TAPS ALLOWED
- N = NOTIFICATION CABLE
  2#12 THWN (BU,BN)
  NO T-TAPS ALLOWED
- P = 24VDC POWER
  2#12 THWN (BK,RD)
  NO T-TAPS ALLOWED

APPROVAL STAMP
IDENTIFICATION STAMP
DIVISION OF THE STATE ARCHITECT
APPL 02- 107417
AC ____ FLS ____ SS ____
DATE: ____

NO.	ISSUED FOR	DATE
1	SUBMITTAL PACKAGE SHP	2/23/07

CERTIFIED BY

K M D
KAPLAN McLAUGHLIN DIAZ
ARCHITECTURE PLANNING
222 VALLEJO SAN FRANCISCO, CA 94111
(415) 398-5191 FAX (415) 394-7158

DFP JOB#: 606-120

DFP CONTRACTORS LICENSE #497066
DIVERSIFIED FIRE PRODUCTS
ENGINEERED FIRE ALARM SYSTEMS
PHONE (408) 370-9770 FAX (408) 370-9824
1006 E. HAMILTON AVE. SUITE 8
CAMPBELL, CA 95008
PHONE (510) 568-3100 FAX (510) 568-3150
1600 HARRISON STREET SUITE 1545
OAKLAND, CA 94612
JIM SCHLOPPEL

SOLANO COMMUNITY COLLEGE

SCCD
VALLEJO CENTER
Contract # A003.6123.01.V1

PROJECT NO. DFP JOB#606-120
DATE SEE ABOVE

BUILDING "B"
1ST FLOOR PLAN
DEVICE LAYOUT

FA-1.01.1

PLOT DATE:

COPYRIGHT © 2004 BY KMD (KAPLAN McLAUGHLIN DIAZ). ALL RIGHTS RESERVED.

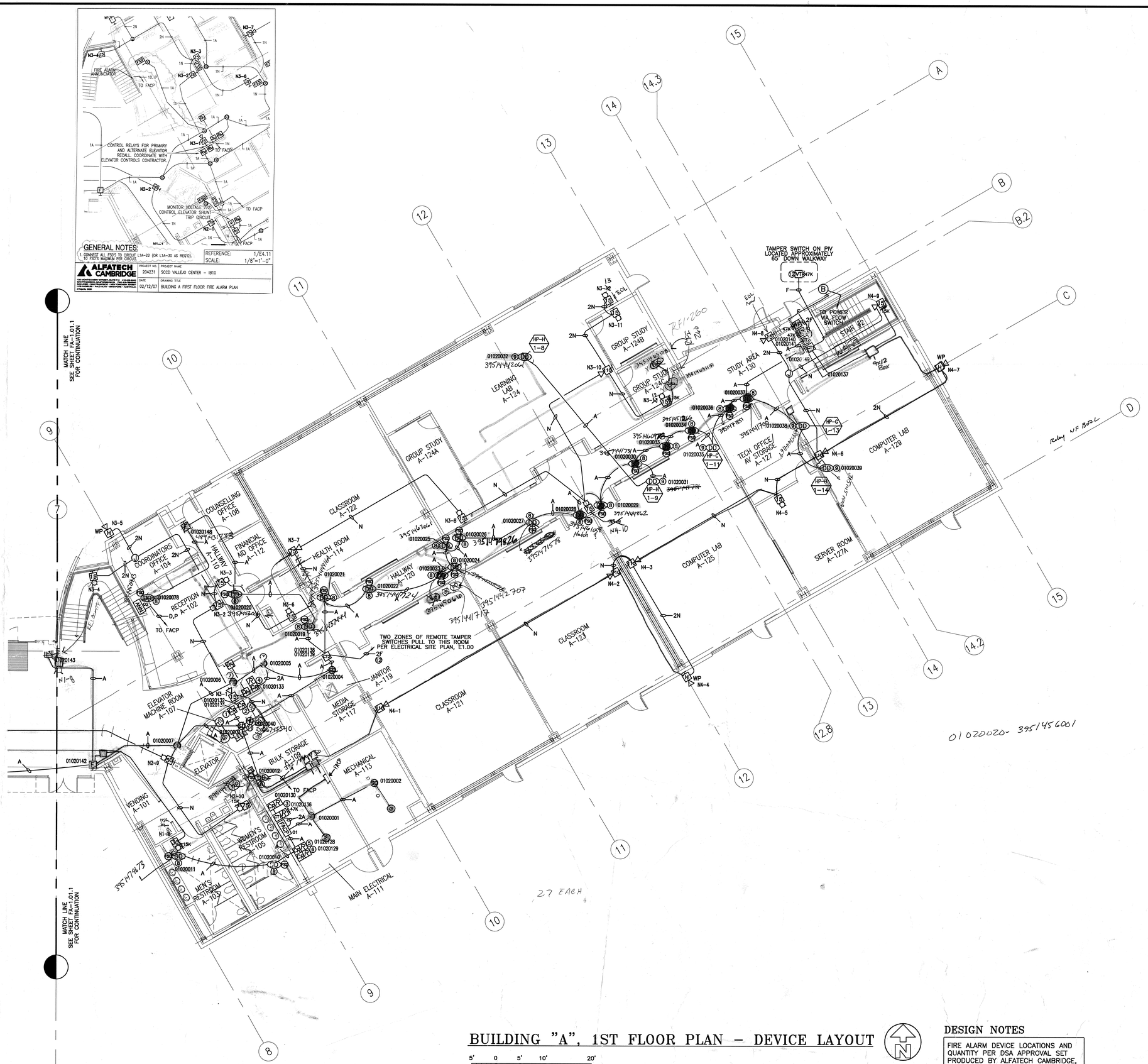

BUILDING "A", 1ST FLOOR PLAN – DEVICE LAYOUT

5' 0 5' 10' 20'
SCALE : 1/8" = 1'-0"

DESIGN NOTES

FIRE ALARM DEVICE LOCATIONS AND QUANTITY PER DSA APPROVAL SET PRODUCED BY ALFATECH CAMBRIDGE, DELTA 1, 12/08/05.

LEGEND

SYMBOL	DESCRIPTION
FACP	FIRE ALARM CONTROL PANEL
ANN	REMOTE ANNUNCIATOR
DIT	DUAL INPUT MODULE
SIT	SINGLE INPUT MODULE
SCI$_S$	SYNCHRONIZATION OUTPUT MODULE
CR	ADDRESSABLE CONTROL RELAY
SH	ADDRESSABLE SINGLE ACTION PULL STATION
SD	ADDRESSABLE ION/PHOTO SMOKE DETECTOR
HD	ADDRESSABLE HEAT DETECTOR
DD	DUCT SMOKE DETECTOR
DH	DOOR HOLDER (24VAC/DC OR 120VAC/DC)
R	INTERPOSING RELAY
BPS6A	BOOSTER POWER SUPPLY
XX	HORN/STROBE (XX DENOTES CANDELA)
XX	STROBE (XX DENOTES CANDELA)
WP H	WEATHERPROOF HORN
VT	VALVE TAMPER SWITCH
WF	WATER FLOW SWITCH
FSD	FIRE SMOKE DAMPER
B	FIRE SPRINKLER WATERFLOW BELL
	END OF LINE RESISTOR

ADDRESS CIRCUIT LEGEND

LRM CARD# / PANEL# – DEVICE ADDRESS#
PPCCDDDD

NAC CIRCUIT LEGEND

SIGNAL TYPE – DEVICE #
XX1–#
CIRCUIT #

GENERAL SHEET NOTES

1. ADDRESSES FOR SPRINKLER SYSTEM MONITOR MODULES SHALL BE ADDRESSED AS FOLLOWS:
   LOW ADDRESS # = "WATERFLOW SWITCH"
   HIGH ADDRESS # = "VALVE TAMPER SWITCH"

KEYED NOTES

1. CONTROL RELAY FOR ELEVATOR RECALL. COORDINATE WITH ELEVATOR CONTROLS CONTRACTOR.
2. CONTROL RELAY FOR ELEVATOR ALTERNATE RECALL. COORDINATE WITH ELEVATOR CONTROLS CONTRACTOR.
3. CONTROL RELAY FOR ELEVATOR POWER SHUNT TRIP. MONITOR MODULE FOR SHUNT TRIP POWER SUPERVISION.
4. CONTROL RELAY FOR MAGNETIC DOOR HOLDER CONTROL.
5. CONTROL RELAY FOR FAN CONTROL.
6. CONTROL RELAY FOR FIRE/SMOKE DAMPER CONTROL.
7. MOUNT SMOKE DETECTOR AS SHOWN IN THE "DOOR CONTROL SMOKE DETECTOR MOUNTING DETAIL" ON SHEET FA-4.03.
8. MOUNT DUCT SMOKE DETECTOR UPSTREAM AND WITHIN 5' OF FIRE/SMOKE DAMPER. SEE MOUNTING DETAIL ON SHEET FA-4.03. AIRFLOW FOR DUCT SMOKE DETECTOR SHALL MEET MANUFACTURE'S SUGGESTED SPECIFICATIONS. SEE GENERAL NOTES #13 & #14 SHEET FA-0.01.
9. AIRFLOW FOR DUCT SMOKE DETECTOR SHALL MEET MANUFACTURE'S SUGGESTED SPECIFICATIONS. SEE GENERAL NOTES #13 & #14 SHEET FA-0.01.
10. ELEVATOR SHAFT DETECTION PER ANSI/ASME A17.1-1990. ELEVATOR SHAFT SMOKE DETECTORS AND HEAT DETECTORS MUST BE ACCESSIBLE.
11. HEAT DETECTOR IN ELEVATOR SHAFT AND ELEVATOR MACHINE ROOM TO BE LOCATED 2 FEET FROM SPRINKLER HEAD.
12. WIRING TO EXTERIOR VALVE TAMPERS SHALL BE RATED FOR WET LOCATIONS. (DIRECT BURIAL CABLE)

CABLE LEGEND

- A = DATA COMMUNICATIONS CABLE #16 AWG TWISTED PAIR 3,900 FEET MAXIMUM DISTANCE .5uF MAXIMUM CAPACITANCE 79 OHMS MAXIMUM RESISTANCE MAXIMUM OF 124 T-TAPS PER LOOP SEE GENERAL NOTE # 21
- D = ANNUNCIATOR DATA #16 AWG TWISTED PAIR NO T-TAPS ALLOWED
- F = IDC CABLE 2#14 THWN (WH,GN) NO T-TAPS ALLOWED
- M = MISC MAKE-UP CABLE #16 AWG TWISTED PAIR NO T-TAPS ALLOWED
- N = NOTIFICATION CABLE 2#12 THWN (BU,BN) NO T-TAPS ALLOWED
- P = 24VDC POWER 2#12 THWN (BK,RD) NO T-TAPS ALLOWED

APPROVAL STAMP
IDENTIFICATION STAMP
DIVISION OF THE STATE ARCHITECT
APPL 02- 107417
AC ____ FLS ____ SS ____
DATE: ____

NO.	ISSUED FOR	DATE
1	SUBMITTAL PACKAGE SHP	2/23/07

CERTIFIED BY

K M D
KAPLAN McLAUGHLIN DIAZ
ARCHITECTURE PLANNING
222 VALLEJO SAN FRANCISCO, CA 94111
(415) 398-5191 FAX (415) 394-7158

DFP JOB#: 606-120
DFP CONTRACTORS LICENSE #697666
DIVERSIFIED FIRE PRODUCTS
ENGINEERED FIRE ALARM SYSTEMS
PHONE (408) 370-8770 FAX (408) 370-2904
602 YANDELL WAY SUITE E CAMPBELL, CA 95008
PHONE (510) 586-3100 FAX (510) 586-3180
180 GRAND AVENUE SUITE 1046 OAKLAND, CA 94612
JIM SCHLOPPEL

SOLANO COMMUNITY COLLEGE

SCCD
VALLEJO CENTER
Contract # A003.6123.01.V1

PROJECT NO. DFP JOB#606-120
DATE SEE ABOVE

BUILDING "A"
1ST FLOOR PLAN
DEVICE LAYOUT

FA-1.01.2

PLOT DATE:

COPYRIGHT © 2004 BY KMD (KAPLAN McLAUGHLIN DIAZ). ALL RIGHTS RESERVED.

BUILDING "A", 2ND FLOOR PLAN - DEVICE LAYOUT

5' 0 5' 10' 20'

SCALE : 1/8" = 1'-0"

DESIGN NOTES

FIRE ALARM DEVICE LOCATIONS AND QUANTITY PER DSA APPROVAL SET PRODUCED BY ALFATECH CAMBRIDGE, DELTA 1, 12/08/05.

LEGEND

SYMBOL	DESCRIPTION
FACP	FIRE ALARM CONTROL PANEL
ANN	REMOTE ANNUNCIATOR
CT2	DUAL INPUT MODULE
CT1	SINGLE INPUT MODULE
CC1 S	SYNCHRONIZATION OUTPUT MODULE
CR	ADDRESSABLE CONTROL RELAY
F	ADDRESSABLE SINGLE ACTION PULL STATION
SD	ADDRESSABLE ION/PHOTO SMOKE DETECTOR
HD	ADDRESSABLE HEAT DETECTOR
DD	DUCT SMOKE DETECTOR
DH	DOOR HOLDER (24VAC/DC OR 120VAC/DC)
R	INTERPOSING RELAY
BPS6A	BOOSTER POWER SUPPLY
XX	HORN/STROBE (XX DENOTES CANDELA)
XX	STROBE (XX DENOTES CANDELA)
WP H	WEATHERPROOF HORN
VT	VALVE TAMPER SWITCH
WF	WATER FLOW SWITCH
FSD	FIRE SMOKE DAMPER
B	FIRE SPRINKLER WATERFLOW BELL
	END OF LINE RESISTOR

ADDRESS CIRCUIT LEGEND

LRM CARD#
PANEL#
DEVICE ADDRESS#
PPCCDDDD

NAC CIRCUIT LEGEND

SIGNAL TYPE
DEVICE #
XX1-#
CIRCUIT #

GENERAL SHEET NOTES

1. ADDRESSES FOR SPRINKLER SYSTEM MONITOR MODULES SHALL BE ADDRESSED AS FOLLOWS:
   LOW ADDRESS # = "WATERFLOW SWITCH"
   HIGH ADDRESS # = "VALVE TAMPER SWITCH"

KEYED NOTES

1. CONTROL RELAY FOR ELEVATOR RECALL. COORDINATE WITH ELEVATOR CONTROLS CONTRACTOR.
2. CONTROL RELAY FOR ELEVATOR ALTERNATE RECALL. COORDINATE WITH ELEVATOR CONTROLS CONTRACTOR.
3. CONTROL RELAY FOR ELEVATOR POWER SHUNT TRIP. MONITOR MODULE FOR SHUNT TRIP POWER SUPERVISION.
4. CONTROL RELAY FOR MAGNETIC DOOR HOLDER CONTROL. at each location
5. CONTROL RELAY FOR FAN CONTROL. Electric Room
6. CONTROL RELAY FOR FIRE/SMOKE DAMPER CONTROL.
7. MOUNT SMOKE DETECTOR AS SHOWN IN THE "DOOR CONTROL SMOKE DETECTOR MOUNTING DETAIL" ON SHEET FA-4.03.
8. MOUNT DUCT SMOKE DETECTOR UPSTREAM AND WITHIN 5' OF FIRE/SMOKE DAMPER. SEE MOUNTING DETAIL ON SHEET FA-4.03. AIRFLOW FOR DUCT SMOKE DETECTOR SHALL MEET MANUFACTURE'S SUGGESTED SPECIFICATIONS. SEE GENERAL NOTES #13 & #14 SHEET FA-0.01.
9. AIRFLOW FOR DUCT SMOKE DETECTOR SHALL MEET MANUFACTURE'S SUGGESTED SPECIFICATIONS. SEE GENERAL NOTES #13 & #14 SHEET FA-0.01.
10. ELEVATOR SHAFT DETECTION PER ANSI/ASME A17.1-1990. ELEVATOR SHAFT SMOKE DETECTORS AND HEAT DETECTORS MUST BE ACCESSIBLE.
11. HEAT DETECTOR IN ELEVATOR SHAFT AND ELEVATOR MACHINE ROOM TO BE LOCATED 2 FEET FROM SPRINKLER HEAD.
12. WIRING TO EXTERIOR VALVE TAMPERS SHALL BE RATED FOR WET LOCATIONS. (DIRECT BURIAL CABLE)

CABLE LEGEND

A = DATA COMMUNICATIONS CABLE
#16 AWG TWISTED PAIR
3,900 FEET MAXIMUM DISTANCE
.5uF MAXIMUM CAPACITANCE
79 OHMS MAXIMUM RESISTANCE
MAXIMUM OF 124 T-TAPS PER LOOP
SEE GENERAL NOTE # 21

D = ANNUNCIATOR DATA
#16 AWG TWISTED PAIR
NO T-TAPS ALLOWED

F = IDC CABLE
2#14 THWN (WH,GN)
NO T-TAPS ALLOWED

M = MISC MAKE-UP CABLE
#16 AWG TWISTED PAIR
NO T-TAPS ALLOWED

N = NOTIFICATION CABLE
2#12 THWN (BU,BN)
NO T-TAPS ALLOWED

P = 24VDC POWER
2#12 THWN (BK,RD)
NO T-TAPS ALLOWED

APPROVAL STAMP
IDENTIFICATION STAMP
DIVISION OF THE STATE ARCHITECT
APPL 02- 107417
AC ____ FLS ____ SS ____
DATE: ____

NO.	ISSUED FOR		DATE
1	SUBMITTAL PACKAGE	SHP	2/23/07

CERTIFIED BY

K M D
KAPLAN McLAUGHLIN DIAZ
ARCHITECTURE PLANNING
222 VALLEJO
SAN FRANCISCO, CA 94111
(415) 398-5191
FAX (415) 394-7158

DFP JOB#: 606-120
DFP
CONTRACTORS LICENSE #627566
DIVERSIFIED FIRE PRODUCTS
ENGINEERED FIRE ALARM SYSTEMS
PHONE (408) 370-3770
FAX (408) 370-0654
502 VANDELL WAY
SUITE E
CAMPBELL, CA 95008
PHONE (510) 588-3100
FAX (510) 588-3120
180 GRAND AVENUE
SUITE 1545
OAKLAND, CA 94612
JIM SCHLOFFEL

SOLANO COMMUNITY COLLEGE

SCCD
VALLEJO CENTER
Contract # A003.6123.01.V1

PROJECT NO.	DATE
DFP JOB#606-120	SEE ABOVE

BUILDING "A"
2ND FLOOR PLAN
DEVICE LAYOUT

FA-1.02

PLOT DATE:

COPYRIGHT © 2004 BY KMD (KAPLAN McLAUGHLIN DIAZ). ALL RIGHTS RESERVED.

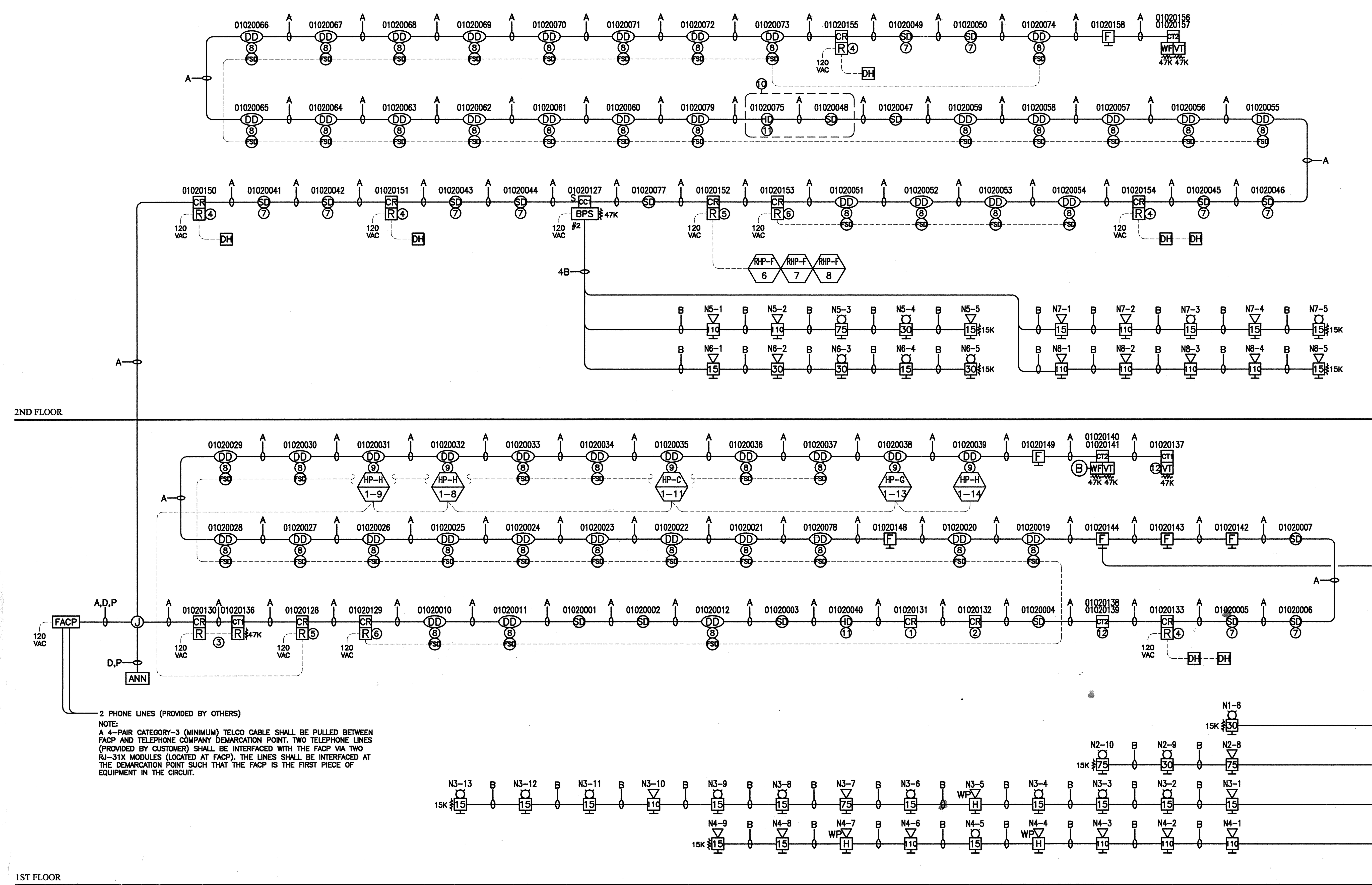

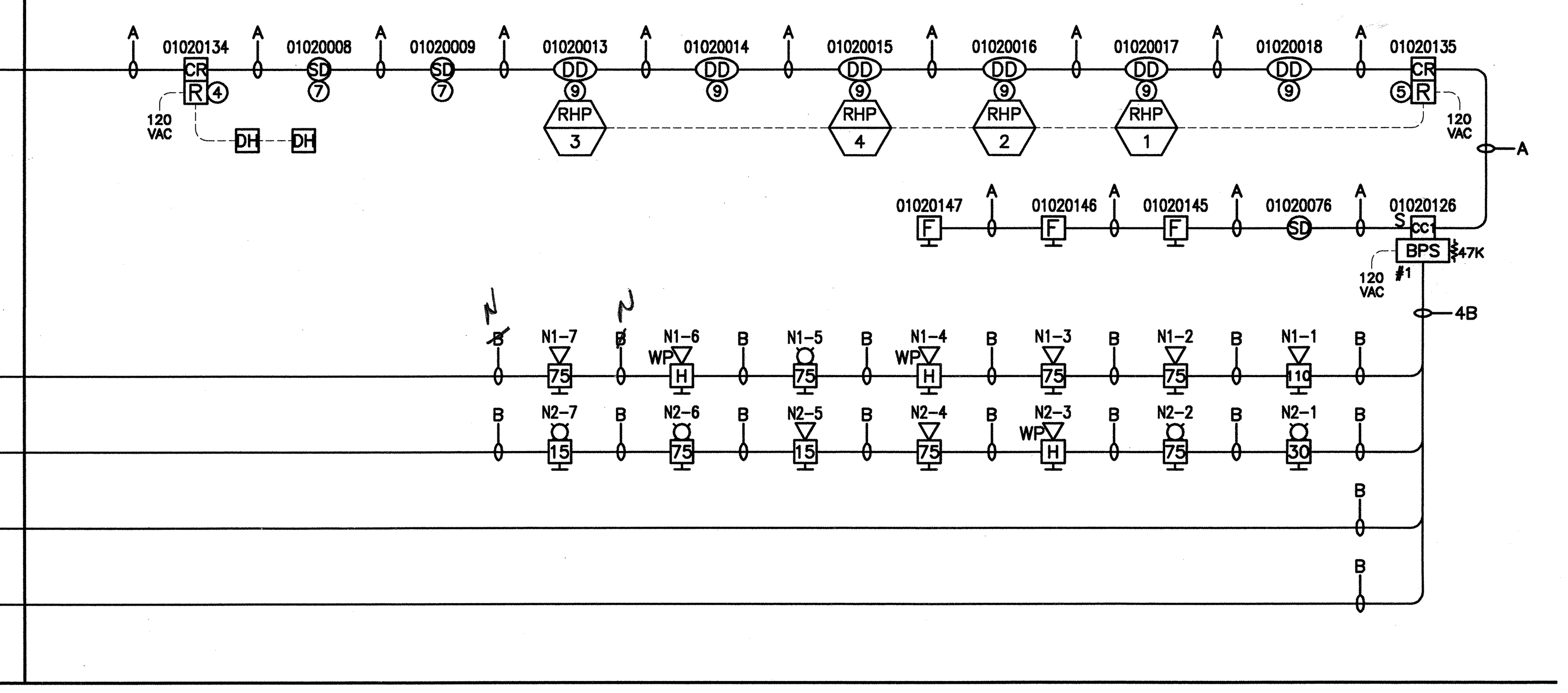

LEGEND

SYMBOL	DESCRIPTION
FACP	FIRE ALARM CONTROL PANEL
ANN	REMOTE ANNUNCIATOR
CT2	DUAL INPUT MODULE
CT1	SINGLE INPUT MODULE
CC1s	SYNCHRONIZATION OUTPUT MODULE
CR	ADDRESSABLE CONTROL RELAY
F	ADDRESSABLE SINGLE ACTION PULL STATION
SD	ADDRESSABLE ION/PHOTO SMOKE DETECTOR
HD	ADDRESSABLE HEAT DETECTOR
DD	DUCT SMOKE DETECTOR
DH	DOOR HOLDER (24VAC/DC OR 120VAC/DC)
R	INTERPOSING RELAY
BPS6A	BOOSTER POWER SUPPLY
▷XX H	HORN/STROBE (XX DENOTES CANDELA)
○XX H	STROBE (XX DENOTES CANDELA)
WP ▷H	WEATHERPROOF HORN
VT	VALVE TAMPER SWITCH
WF	WATER FLOW SWITCH
FSD	FIRE SMOKE DAMPER
B	FIRE SPRINKLER WATERFLOW BELL
⌇	END OF LINE RESISTOR

ADDRESS CIRCUIT LEGEND

LRM CARD#
PANEL#
DEVICE ADDRESS#
PPCCDDDD

NAC CIRCUIT LEGEND

SIGNAL TYPE
DEVICE #
XX1-#
CIRCUIT #

GENERAL SHEET NOTES

1. ADDRESSES FOR SPRINKLER SYSTEM MONITOR MODULES SHALL BE ADDRESSED AS FOLLOWS:
   LOW ADDRESS # = "WATERFLOW SWITCH"
   HIGH ADDRESS # = "VALVE TAMPER SWITCH"

KEYED NOTES

1. CONTROL RELAY FOR ELEVATOR RECALL. COORDINATE WITH ELEVATOR CONTROLS CONTRACTOR.
2. CONTROL RELAY FOR ELEVATOR ALTERNATE RECALL. COORDINATE WITH ELEVATOR CONTROLS CONTRACTOR.
3. CONTROL RELAY FOR ELEVATOR POWER SHUNT TRIP. MONITOR MODULE FOR SHUNT TRIP POWER SUPERVISION.
4. CONTROL RELAY FOR MAGNETIC DOOR HOLDER CONTROL.
5. CONTROL RELAY FOR FAN CONTROL.
6. CONTROL RELAY FOR FIRE/SMOKE DAMPER CONTROL.
7. MOUNT SMOKE DETECTOR AS SHOWN IN THE "DOOR CONTROL SMOKE DETECTOR MOUNTING DETAIL" ON SHEET FA-4.03.
8. MOUNT DUCT SMOKE DETECTOR UPSTREAM AND WITHIN 5' OF FIRE/SMOKE DAMPER. SEE MOUNTING DETAIL ON SHEET FA-4.03. AIRFLOW FOR DUCT SMOKE DETECTOR SHALL MEET MANUFACTURE'S SUGGESTED SPECIFICATIONS. SEE GENERAL NOTES #13 & #14 SHEET FA-0.01.
9. AIRFLOW FOR DUCT SMOKE DETECTOR SHALL MEET MANUFACTURE'S SUGGESTED SPECIFICATIONS. SEE GENERAL NOTES #13 & #14 SHEET FA-0.01.
10. ELEVATOR SHAFT DETECTION PER ANSI/ASME A17.1-1990. ELEVATOR SHAFT SMOKE DETECTORS AND HEAT DETECTORS MUST BE ACCESSIBLE.
11. HEAT DETECTOR IN ELEVATOR SHAFT AND ELEVATOR MACHINE ROOM TO BE LOCATED 2 FEET FROM SPRINKLER HEAD.
12. WIRING TO EXTERIOR VALVE TAMPERS SHALL BE RATED FOR WET LOCATIONS. (DIRECT BURIAL CABLE)

CABLE LEGEND

A = DATA COMMUNICATIONS CABLE
#16 AWG TWISTED PAIR
3,900 FEET MAXIMUM DISTANCE
.5uF MAXIMUM CAPACITANCE
79 OHMS MAXIMUM RESISTANCE
MAXIMUM OF 124 T-TAPS PER LOOP
SEE GENERAL NOTE # 21

D = ANNUNCIATOR DATA
#16 AWG TWISTED PAIR
NO T-TAPS ALLOWED

F = IDC CABLE
2#14 THWN (WH,GN)
NO T-TAPS ALLOWED

M = MISC MAKE-UP CABLE
#16 AWG TWISTED PAIR
NO T-TAPS ALLOWED

B = NOTIFICATION CABLE
2#12 THWN (BU,BN)
NO T-TAPS ALLOWED

P = 24VDC POWER
2#12 THWN (BK,RD)
NO T-TAPS ALLOWED

DESIGN NOTES

FIRE ALARM DEVICE LOCATIONS AND QUANTITY PER DSA APPROVAL SET PRODUCED BY ALFATECH CAMBRIDGE, DELTA 1, 12/08/05.

BUILDING A

BUILDING B

1 / FA-2.01 RISER DIAGRAM

EST-3 FIRE ALARM PANEL CALCULATIONS

QTY.	PART NUMBER	DESCRIPTION	STANDBY	CURRENT	ALARM	CURRENT
PANEL						
1	3-CPU3 / 3-PPS/M	Central Processor W/ Power Supply	0.1450	0.1450	0.1550	0.1550
1	3-RS485B	Network Communication Card	0.0550	0.0550	0.0550	0.0550
1	3-RS232	Printer Communications Card	0.0480	0.0480	0.0480	0.0480
1	3-SSDC1	Single SIGA Driver Controller (Max Load)	0.1390	0.1390	0.1580	0.1580
1	3-LCD	Liquid Crystal Display Module	0.0530	0.0530	0.0530	0.0530
1	3-MODCOM	Modem/Dialer	0.0600	0.0600	0.0950	0.0950
1	3-12/S1GY	12 Switches, 1 Green, 1 Yel	0.0020	0.0020	0.0150	0.0150
1	3-ANNCPU3	Annunciator CPU	0.1200	0.1200	0.1400	0.1400
1	3-LCD	Annunciator LCD	0.0380	0.0380	0.0380	0.0380
PANEL TOTALS				0.6600		0.7570
STANDBY						
Controls standby						0.6600
Detection standby						0.0000
STBY PER HR.						0.6600
x No. of hrs						24
TOTAL STBY						15.8400
ALARM						
Controls alarm						0.7570
Detection alarm						0.0000
Signal alarm						0.0000
SUBTOTAL ALARM						0.7570
5 minute alarm(x.084)						0.084
TOTAL FOR ALARM						0.0636
TOTALS						
TOTAL STBY +						15.8400
TOTAL ALARM						0.0636
SUBTOTAL						15.9036
x SAFETY MARGIN						1.25
BATTERY TOTAL						**19.8795**
BATTERY SIZE						**24AH**

BPS6A #1

PANEL		STANDBY CURRENT PER UNIT	STANDBY CURRENT TOTAL
1	BPS6A POWER SUPPLY	0.0700	0.0700
		ALARM CURRENT PER UNIT	ALARM CURRENT TOTAL
CIRCUITS ADDED: N1,N2,N3,N4		0.2700	0.2700
		STANDBY	ALARM
PANEL TOTALS		0.0700	0.2700
SIGNAL DEVICES			
QTY.	SYMBOL	PER DEVICE	TOTAL
4	▷15H	0.081	0.324
	▷30H		
6	▷75H	0.161	0.966
6	▷110H	0.203	1.218
6	WP ▷H	0.040	0.24
11	○15H	0.059	0.649
3	○30H	0.082	0.246
4	○75H	0.152	0.608
		SIGNAL TOTAL	4.251
STAND BY			
Panel stby			0.0700
STBY PER HR.			0.0700
x No. of hrs			24
TOTAL STBY			1.6800
ALARM			
Panel alarm			0.2700
Signal alarm			4.2510
SUBTOTAL ALARM			4.5210
5 minute alarm(x.084)			0.084
TOTAL FOR ALARM			0.3798
TOTALS			
TOTAL STBY +			1.6800
TOTAL ALARM			0.3798
SUBTOTAL			2.0598
x SAFETY MARGIN			1.25
BATTERY TOTAL			**2.5747**
BATTERY SIZE			**7AH**

BPS6A #2

PANEL		STANDBY CURRENT PER UNIT	STANDBY CURRENT TOTAL
1	BPS6A POWER SUPPLY	0.0700	0.0700
		ALARM CURRENT PER UNIT	ALARM CURRENT TOTAL
CIRCUITS ADDED: N5,N6,N7,N8		0.2700	0.2700
		STANDBY	ALARM
PANEL TOTALS		0.0700	0.2700
SIGNAL DEVICES			
QTY.	SYMBOL	PER DEVICE	TOTAL
5	▷15H	0.081	0.405
1	▷30H	0.094	0.094
	▷75H		
7	▷110H	0.203	1.421
	WP ▷H		
3	○15H	0.059	0.177
3	○30H	0.082	0.246
1	○75H	0.152	0.152
		SIGNAL TOTAL	2.495
STAND BY			
Panel stby			0.0700
STBY PER HR.			0.0700
x No. of hrs			24
TOTAL STBY			1.6800
ALARM			
Panel alarm			0.2700
Signal alarm			2.4950
SUBTOTAL ALARM			2.7650
5 minute alarm(x.084)			0.084
TOTAL FOR ALARM			0.2323
TOTALS			
TOTAL STBY +			1.6800
TOTAL ALARM			0.2323
SUBTOTAL			1.9123
x SAFETY MARGIN			1.25
BATTERY TOTAL			**2.3903**
BATTERY SIZE			**7AH**

NAC VOLTAGE DROP CALCULATIONS

CIRCUIT:	AREA SERVED	▷15 0.081 CURRENT DRAW	▷30 0.094 CURRENT DRAW	▷75 0.161 CURRENT DRAW	▷110 0.203 CURRENT DRAW	▷H WP 0.040 CURRENT DRAW	○15 0.059 CURRENT DRAW	○30 0.082 CURRENT DRAW	○75 0.152 CURRENT DRAW	CIRCUIT DEVICE QUANTITY	TOTAL CIRCUIT LOAD		CIRCUIT DISTANCE (IN FEET)		12 AWG WIRE RESISTANCE (PER FOOT)		VOLTS DROPPED		SUPPLY VOLTAGE		**VOLTAGE DROP %**	END OF LINE VOLTAGE
N1	1ST FLOOR			3	1	2		1	1	8	1.000	X	450	X	0.0032	=	1.4400	/	24	=	**6.0000%**	22.5600
N2	1ST FLOOR	1		2		1	1	2	3	10	1.122	X	450	X	0.0032	=	1.6157	/	24	=	**6.7320%**	22.3843
N3	1ST FLOOR	1		1	1	1	9			13	1.016	X	625	X	0.0032	=	2.0320	/	24	=	**8.4667%**	21.9680
N4	1ST FLOOR	2			4	2	1			9	1.113	X	625	X	0.0032	=	2.2260	/	24	=	**9.2750%**	21.7740
N5	2ND FLOOR	1			2			1	1	5	0.721	X	225	X	0.0032	=	0.5191	/	24	=	**2.1630%**	23.4809
N6	2ND FLOOR	1	1				1	2		5	0.398	X	250	X	0.0032	=	0.3184	/	24	=	**1.3267%**	23.6816
N7	2ND FLOOR	2			1		2			5	0.483	X	200	X	0.0032	=	0.3091	/	24	=	**1.2880%**	23.6909
N8	2ND FLOOR	1			4					5	0.893	X	250	X	0.0032	=	0.7144	/	24	=	**2.9767%**	23.2856

2 / FA-2.01 SYSTEM CALCULATIONS

APPROVAL STAMP
IDENTIFICATION STAMP
DIVISION OF THE STATE ARCHITECT
APPL 02- 107417
AC ____ FLS ____ SS ____
DATE: ____

NO.	ISSUED FOR		DATE
1	SUBMITTAL PACKAGE	SHP	2/23/07

CERTIFIED BY

K M D
KAPLAN McLAUGHLIN DIAZ
ARCHITECTURE PLANNING
222 VALLEJO SAN FRANCISCO, CA 94111
(415) 398-5191 FAX (415) 394-7158

DFP JOB#: 606-120
DFP
CONTRACTORS LICENSE #627566
DIVERSIFIED FIRE PRODUCTS
ENGINEERED FIRE ALARM SYSTEMS
PHONE (408) 370-3770 FAX (408) 370-0654 502 VANDELL WAY SUITE E CAMPBELL, CA 95008
PHONE (510) 588-3100 FAX (510) 588-3120 180 GRAND AVENUE SUITE 1545 OAKLAND, CA 94612 JIM SCHLOFFEL

SOLANO COMMUNITY COLLEGE

SCCD
VALLEJO CENTER
Contract # A003.6123.01.V1

PROJECT NO. DFP JOB#606-120 | DATE SEE ABOVE

RISER DIAGRAM AND SYSTEM CALCULATIONS

FA-2.01

PLOT DATE:

COPYRIGHT © 2004 BY KMD (KAPLAN McLAUGHLIN DIAZ). ALL RIGHTS RESERVED.

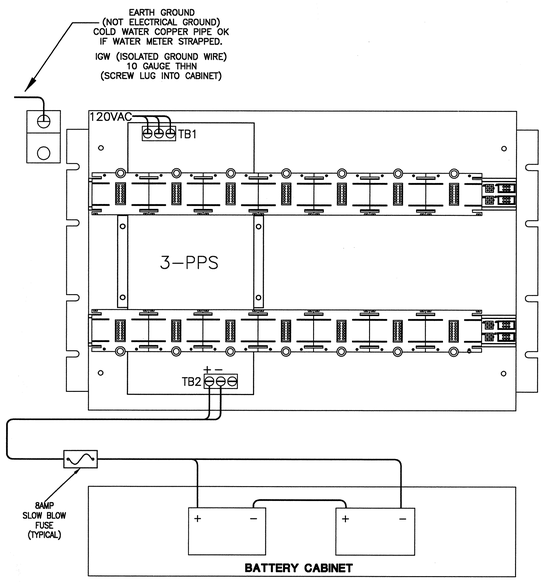

1 FA-4.01 FACP 01 HARWARE LAYER

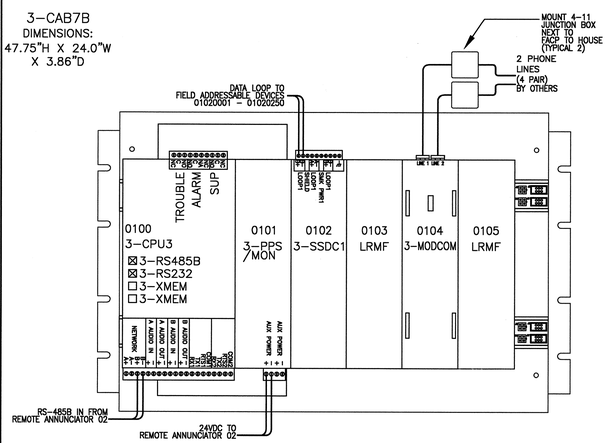

2 FA-4.01 FACP 01 USER LAYER
MAIN ELECTRICAL ROOM A-111 01 FACP

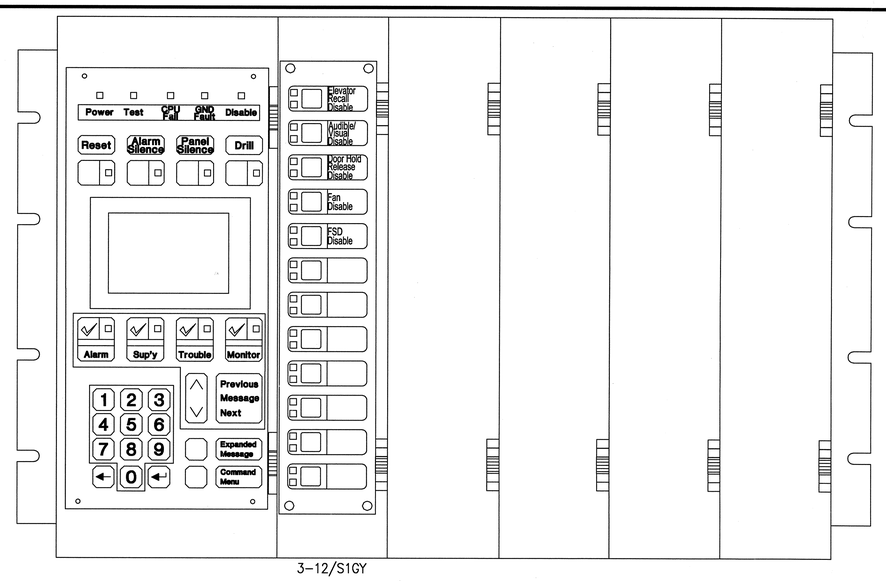

3 FA-4.01 FACP 01 USER LAYER

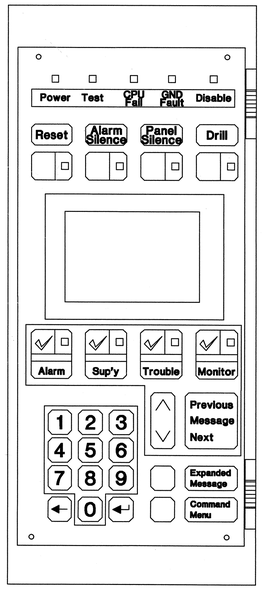

EXTERNAL

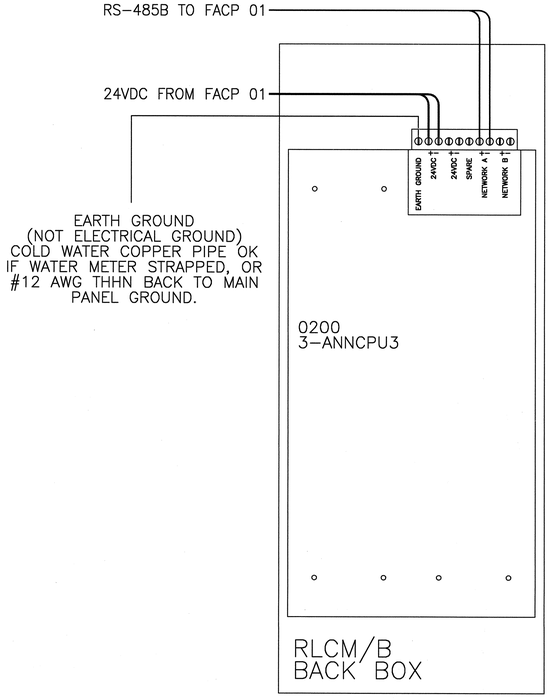

INTERNAL

4 FA-4.01 3-LCDANN REMOTE ANNUNCIATOR 02
1ST FLOOR RECEPTION A-102 02 ANN

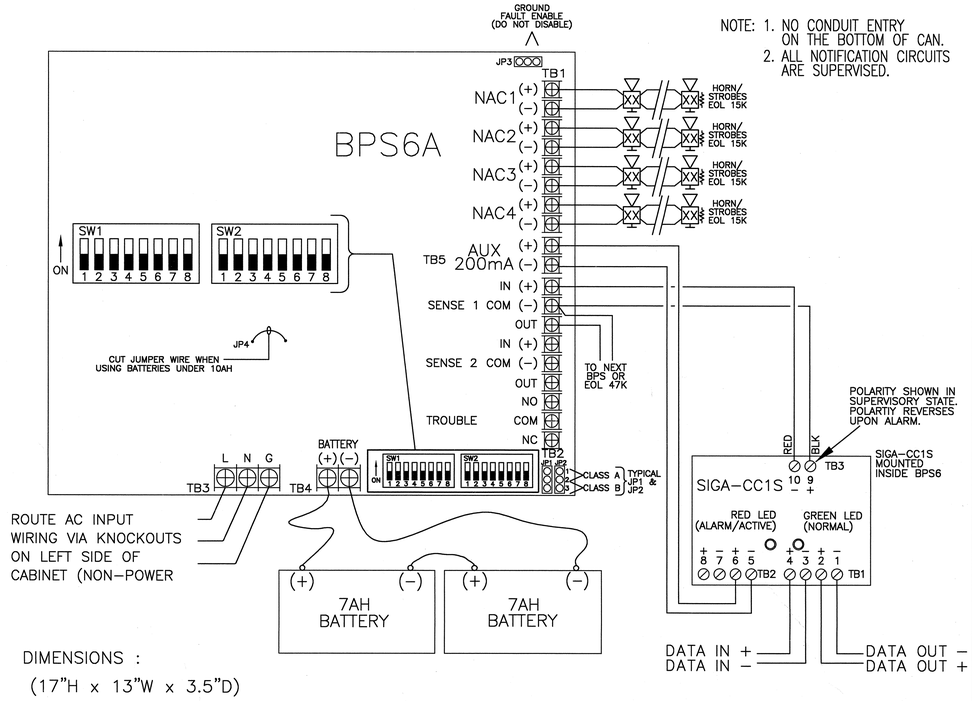

NOTE: 1. NO CONDUIT ENTRY ON THE BOTTOM OF CAN.
2. ALL NOTIFICATION CIRCUITS ARE SUPERVISED.

DESIGN NOTES

FIRE ALARM DEVICE LOCATIONS AND QUANTITY PER DSA APPROVAL SET PRODUCED BY ALFATECH CAMBRIDGE, DELTA 1, 12/08/05.

5 FA-4.01 TYPICAL BPS6A BOOSTER POWER SUPPLY WITH SIGA-CC1S WIRING DETAIL S CC BPS

APPROVAL STAMP
IDENTIFICATION STAMP
DIVISION OF THE STATE ARCHITECT
APPL 02- 107417
AC ____ FLS ____ SS ____
DATE: ____

NO.	ISSUED FOR	DATE
1	SUBMITTAL PACKAGE SHP	2/23/07

CERTIFIED BY

K M D
KAPLAN McLAUGHLIN DIAZ
ARCHITECTURE PLANNING
222 VALLEJO SAN FRANCISCO, CA 94111
(415) 398-5191 FAX (415) 394-7158

DFP JOB#: 606-120

DFP CONTRACTORS LICENSE #887888
DIVERSIFIED FIRE PRODUCTS
ENGINEERED FIRE ALARM SYSTEMS
PHONE (408) 370-3770 PHONE (510) 568-3100
FAX (408) 370-0924 FAX (510) 568-3102
608 VANDELL WAY 150 GRAND AVENUE
SUITE A SUITE 1045
CAMPBELL, CA 95008 OAKLAND, CA 94612
JIM SCHLOFFEL

SOLANO COMMUNITY COLLEGE

SCCD
VALLEJO CENTER
Contract # A003.6123.01.V1

PROJECT NO.	DATE
DFP JOB#606-120	SEE ABOVE

FIRE ALARM CONTROL PANEL, BPS6A AND REMOTE ANNUNCIATOR DETAILS

FA-4.01

COPYRIGHT © 2004 BY KMD (KAPLAN McLAUGHLIN DIAZ). ALL RIGHTS RESERVED.

PLOT DATE:

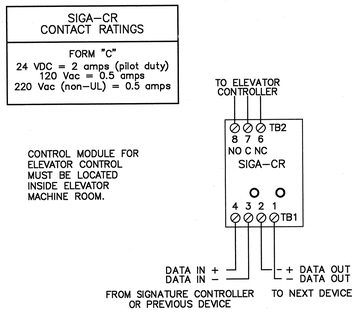

1 FA–4.02 SIGA–CR FOR ELEVATOR CONTROL

CR

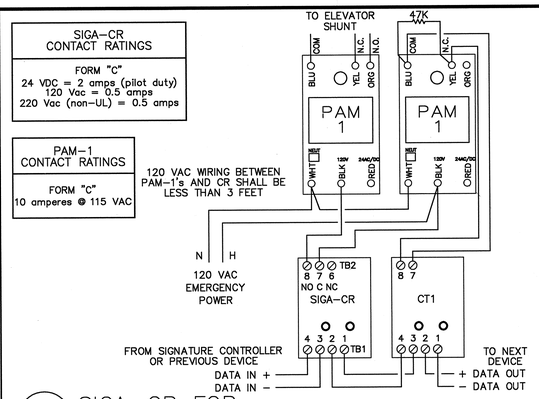

2 FA–4.02 SIGA–CR FOR ELEVATOR SHUNT TRIP

CR CT1 RR

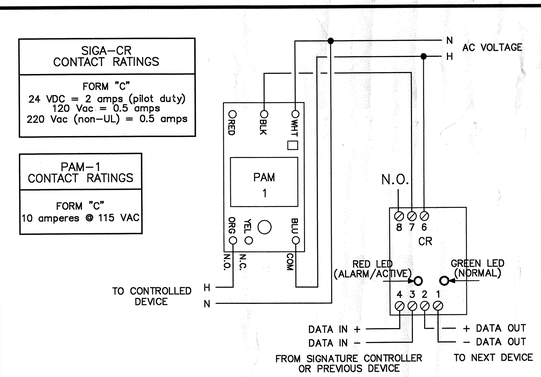

3 FA–4.02 SIGA–CR W/PAM–1 FOR MISCELLANEOUS CONTROL

CR R

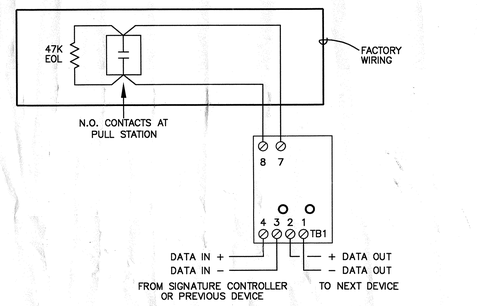

4 FA–4.02 SIGA–270 MANUAL PULL STATION

FH

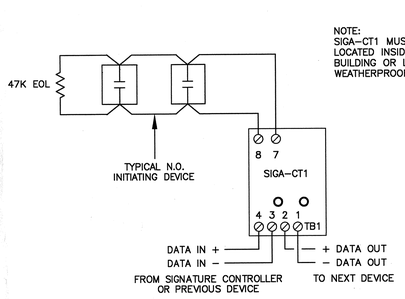

5 FA–4.02 SIGA–CT1 N.O. CONTACT

CT1

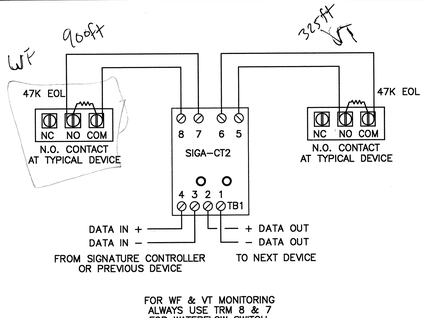

6 FA–4.02 SIGA–CT2 N.O. CONTACT WIRING

CT2

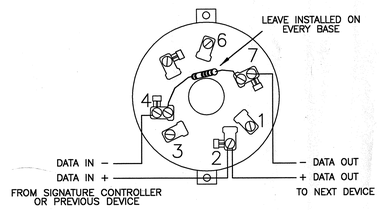

7 FA–4.02 SIGA DETECTOR W/ SIGA–SB4 BASE

SD HD

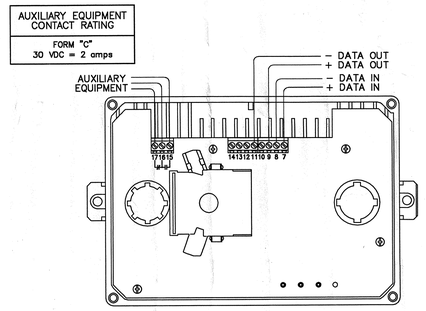

8 FA–4.02 SIGA–SD DUCT SMOKE DETECTOR

DD

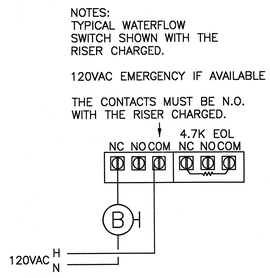

9 FA–4.02 WATERFLOW BELL CONNECTION FOR MAIN WATERFLOW ONLY

B

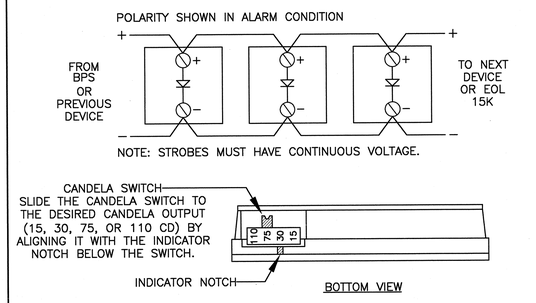

10 FA–4.02 GENESIS SERIES FIELD CONFIGURABLE HORN/STROBES

HS

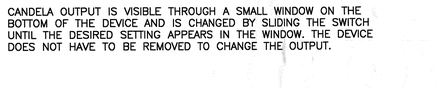

11 FA–4.02 G1RF–VM STROBE WIRING DETAIL

HS

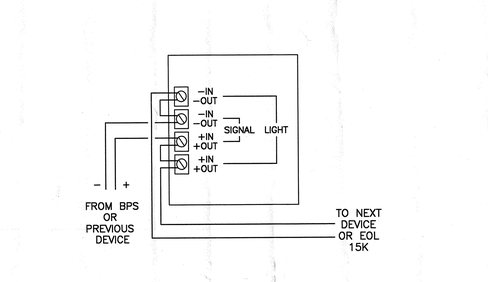

12 FA–4.02 757 SERIES WEATHERPROOF HORN

WP H

13 FA–4.02 NOT USED

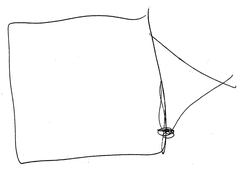

14 FA–4.02 NOT USED

15 FA–4.02 NOT USED

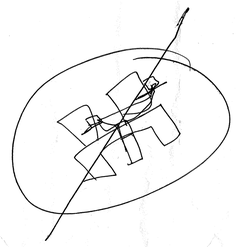

16 FA–4.02 NOT USED

DESIGN NOTES

FIRE ALARM DEVICE LOCATIONS AND QUANTITY PER DSA APPROVAL SET PRODUCED BY ALFATECH CAMBRIDGE, DELTA 1, 12/08/05.

APPROVAL STAMP
IDENTIFICATION STAMP
DIVISION OF THE STATE ARCHITECT
APPL 02– 107417
AC ____ FLS ____ SS ____
DATE: ____

NO.	ISSUED FOR	DATE
1	SUBMITTAL PACKAGE SHP	2/23/07

CERTIFIED BY

K M D
KAPLAN McLAUGHLIN DIAZ
ARCHITECTURE PLANNING
222 VALLEJO SAN FRANCISCO, CA 94111
(415)398-5191 FAX (415)394-7158

DFP JOB#: 606–120

DFP
CONTRACTORS LICENSE #697696
DIVERSIFIED FIRE PRODUCTS
ENGINEERED FIRE ALARM SYSTEMS
PHONE (408) 370–3770 PHONE (510) 568–6100
FAX (408) 370–3004 FAX (510) 568–6110
606 VANDELL WAY 1001 BROADWAY
SUITE E SUITE 1045
CAMPBELL, CA 95008 OAKLAND, CA 94612
JIM SCHLOFFEL

SOLANO COMMUNITY COLLEGE

SCCD
VALLEJO CENTER
Contract # A003.6123.01.V1

PROJECT NO. DFP JOB#606–120
DATE SEE ABOVE

DEVICE DETAILS

FA-4.02

PLOT DATE:

COPYRIGHT © 2004 BY KMD (KAPLAN McLAUGHLIN DIAZ). ALL RIGHTS RESERVED.

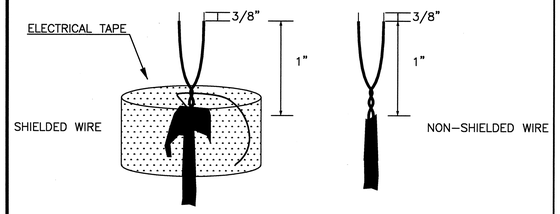

1. STRIP OUTER JACKET, BEING CAREFUL NOT TO NICK THE INSULATION SURROUNDING THE COPPER.

2. STRIP BACK THE INSULATION SURROUNDING THE COPPER BY 3/8", LEAVING 1" OF COPPER INSULATION EXPOSED.

3. IF SHIELDED WIRE IS USED, MAKE SURE THAT THE SHIELDS ARE ISOLATED AND CONTINUOUS.

1 FA-4.03 TYPICAL WIRING

SYSTEM DETAILS: CALIFORNIA: UL SYSTEM # WL1001

1. System Justification: UL Through-Penetration Firestop System No. WL1001, per ASTM E 814 (ANSI/UL1479) Fire Test.
2. Assembly: 1-hr. fire rated gypsum wallboard/stud assembly. Rigid steel or EMT conduits 4-in. diameter may only be used in walls constructed using steel channel studs.
3. Rating: F-1hr., T-0hr. with 2 to nominal 4-in. diameter conduit, T-1 hr. with nominal 1-in. diameter (or smaller) conduit.
4. Penetrating Item(s):
Nominal 4-in. diameter (or smaller),
Nominal 4-in. diameter (or smaller) rigid steel conduit.
Nominal 4-in. diameter (or smaller) steel EMT conduit.
Nominal 4-in. diameter (or smaller) flexible steel conduit.

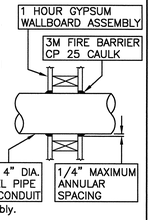

APPLICATION DETAILS:
1. Install the firestop symmetrically on both sides of the wall assembly.
2. Annular space requirements:

Max Pipe Ø	Annular Space	F Rating Hr	T Rating Hr
1 in.	0-3/16 in.	1 or 2	0 +,1 or 2
1 in.	1/4-1/2 in.	3 or 4	3 or 4

3. 3M Fire Barrier CP 25 Caulk is to be forced into the annular space to the maximum extent possible with a minimum 1/4in. diameter bead of CP 25 Caulk applied to the perimeter of the pipe/conduit at its egress from the wall.

2 FA-4.03 FIRESTOP THROUGH PENETRATION GYPSUM WALLBOARD (1 HR)

ALL FIRE ALARM CIRCUITS SHALL BE CONSIDERED POWER LIMITED UNLESS OTHERWISE SPECIFIED.

1) NEVER RUN FIRE ALARM CIRCUITS IN THE SAME CONDUIT AS 120VAC.

2) WHEN 120VAC IS PRESENT IN FIRE ALARM TERMINAL CABINETS, FIRE ALARM CABINETS, OR FIRE ALARM WIRE GUTTERS, KEEP A 1/4 INCH SEPARATION BETWEEN 120VAC AND ALL FIRE ALARM CIRCUITS.

3) SEE NATIONAL ELECTRICAL CODE ARTICLE 760,770 AND 800 FOR MORE WIRING INFORMATION.

3 FA-4.03 POWER LIMITED FIRE ALARM WIRING DETAIL

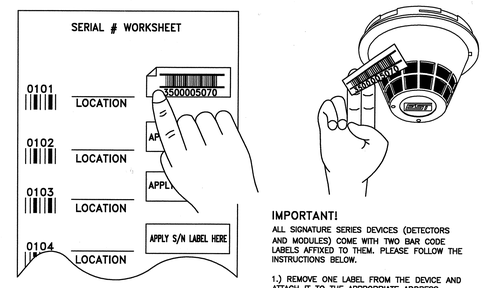

IMPORTANT!

ALL SIGNATURE SERIES DEVICES (DETECTORS AND MODULES) COME WITH TWO BAR CODE LABELS AFFIXED TO THEM. PLEASE FOLLOW THE INSTRUCTIONS BELOW.

1.) REMOVE ONE LABEL FROM THE DEVICE AND ATTACH IT TO THE APPROPRIATE ADDRESS LOCATION ON THE LOG BOOK PROVIDED BY DFP.

2.) REMOVE THE OTHER LABEL FROM FROM THE DEVICE AND REATTACH IF ACROSS THE DETECTOR HEAD UPON INSTALLATION.

4 FA-4.03 SIGNATURE SERIES BAR CODE LABEL INSTRUCTIONS

DEPTH OF WALL SECTION ABOVE DOOR

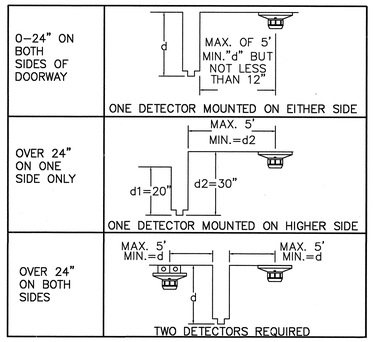

5 FA-4.03 TYPICAL SMOKE DETECTOR INSTALLATION FOR DOOR CONTROL

NOTE:
1. MEASUREMENTS SHOWN ARE TO THE CLOSEST EDGE OF THE DETECTOR.
2. DO NOT MOUNT ANY SMOKE DETECTOR WITHIN 3 FEET OF ANY AIR REGISTER.

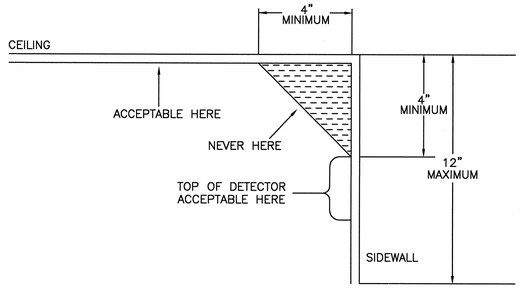

6 FA-4.03 PROPER MOUNTING FOR DETECTORS

1) THE DUCT DETECTOR SHOULD BE MOUNTED A MINIMUM OF 6 DUCT WIDTHS AFTER A BEND, INTAKE OR OBSTRUCTION.

2) ALL SAMPLING TUBES OVER 3 FEET MUST BE SUPPORTED ON BOTH ENDS.

3) WEATHERPROOF HOUSINGS ARE REQUIRED ON ALL OUTSIDE APPLICATIONS.

4) THE HUMIDITY MUST BE BETWEEN 10% AND 93% NON-CONDENSING IN ORDER TO PREVENT FALSE ALARMS.

5) THE TEMPERATURE RANGE IS 32 TO 120 DEGREES F.

6) THE DIFFERENTIAL PRESSURE ACROSS THE DUCT DETECTOR AND THE AIR VELOCITY IN THE DUCT MUST COMPLY WITH THE FOLLOWING:

TYPE OF DETECTOR	PRESSURE (INCHES OF WATER)	VELOCITY (FPM)
SIGA-SD	0.005 TO 1.00	100 TO 4000 (PHOTO)

7) ALL READINGS MUST BE MADE WITH THE AIR HANDLERS RUNNING.
8) IF SPECIAL TEST EQUIPMENT IS REQUIRED, CONTACT DIVERSIFIED FIRE PRODUCTS.
9) ALL TEST EQUIPMENT SHALL BE CALIBRATED AND FUNCTIONING WITHIN THE MANUFACTURES SPECIFIED PARAMETERS.

7 FA-4.03 DUCT DETECTOR COMMISSIONING

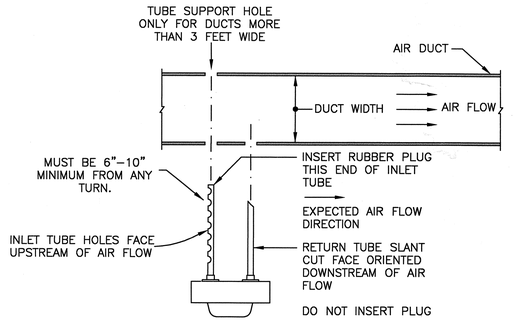

8 FA-4.03 TYPICAL DUCT DETECTOR INSTALLATION

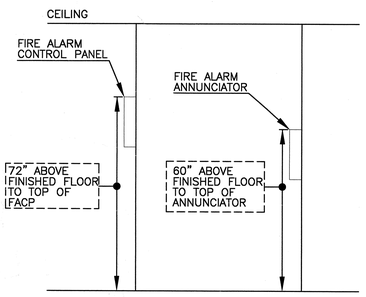

9 FA-4.03 TYPICAL DEVICE ELEVATION DETAIL

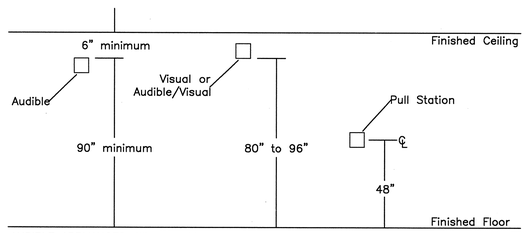

AUDIBLE APPLIANCES: Where ceiling heights allow, top of appliance shall not be less than 90" above finished floor and not less than 6" below finished ceilings (NFPA 72 4-3.5.1). Where audible appliances are combined with visual, the requirements for visual appliances shall take precedence.

VISUAL & AUDIBLE/VISUAL APPLIANCES: The entire lens shall not be less than 80" and not greater than 96" above finished floor (NFPA 72 4-4.4).

FIRE ALARM BOXES: Fire alarm boxes shall be mounted at 48" above finished floor to center of devices.

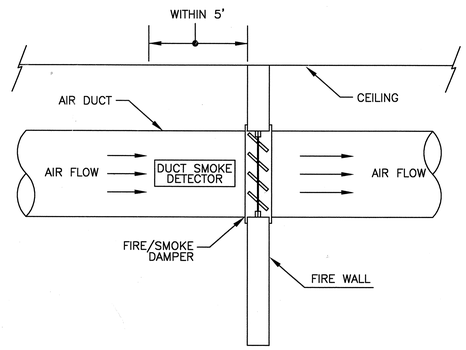

10 FA-4.03 TYPICAL DUCT DETECTOR MOUNTING FOR FIRE/SMOKE DAMPER

11 FA-4.03 NOT USED

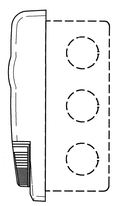

MOUNT 1-GANG BOX, APPROXIMATELY 80" FROM FINISHED FLOOR TO BOTTOM OF BOX TO MEET NFPA 72, 1999 AND ADA STANDARDS OF 80" TO THE BOTTOM OF THE LENS.

STROBE & HORN/STROBE

12 FA-4.03 GENESIS WALL MOUNT DEVICE - BACKBOX MOUNTING DETAIL

13 FA-4.03 NOT USED

14 FA-4.03 NOT USED

15 FA-4.03 NOT USED

DESIGN NOTES

FIRE ALARM DEVICE LOCATIONS AND QUANTITY PER DSA APPROVAL SET PRODUCED BY ALFATECH CAMBRIDGE, DELTA 1, 12/08/05.

APPROVAL STAMP
IDENTIFICATION STAMP
DIVISION OF THE STATE ARCHITECT
APPL 02- 107417
AC ____ FLS ____ SS ____
DATE: ____

NO.	ISSUED FOR	DATE
1	SUBMITTAL PACKAGE SHP	2/23/07

CERTIFIED BY

K M D
KAPLAN McLAUGHLIN DIAZ
ARCHITECTURE 222 VALLEJO (415)398-5191
PLANNING SAN FRANCISCO, CA 94111 FAX (415)394-7158

DFP JOB#: 606-120
DFP CONTRACTORS LICENSE #607566
DIVERSIFIED FIRE PRODUCTS
ENGINEERED FIRE ALARM SYSTEMS
PHONE (408) 370-3770 FAX (408) 370-2024 808 VANDELL WAY SUITE E CAMPBELL, CA 95008
PHONE (510) 568-5100 FAX (510) 568-5120 180 GRAND AVENUE SUITE 1046 OAKLAND, CA 94612 JIM SCHLOPPE

SOLANO COMMUNITY COLLEGE

SCCD
VALLEJO CENTER
Contract # A003.6123.01.V1

PROJECT NO. DFP JOB#606-120
DATE SEE ABOVE

INSTALLATION AND MOUNTING DETAILS

FA-4.03

PLOT DATE:

COPYRIGHT © 2004 BY KMD (KAPLAN McLAUGHLIN DIAZ). ALL RIGHTS RESERVED.

PATH: G:\000\000-000\ACAD\SHEETS\

SHEET TITLES

L0.00	INDEX, NOTES AND LEGEND
L1.01	LANDSCAPE MATERIALS PLAN
L2.01	LANDSCAPE LAYOUT PLAN
L3.01	LANDSCAPE GRADING PLAN
L4.01	LANDSCAPE DRAIN/PIPING PLAN
L5.01	LANDSCAPE PLANTING PLAN
L6.01	LANDSCAPE MATERIALS BLOW UP PLAN
L6.02	LANDSCAPE LAYOUT - WEST BLOW UP PLAN
L6.02A	LANDSCAPE LAYOUT - EAST BLOW UP PLAN
L6.02B	LANDSCAPE JOINT LAYOUT BLOW UP PLAN
L6.03	LANDSCAPE GRADING BLOW UP PLAN
L6.04	LANDSCAPE DETAILS
L6.05	LANDSCAPE DETAILS
L6.06	LANDSCAPE DETAILS
L6.07	LANDSCAPE DETAILS
L6.08	LANDSCAPE DETAILS
L6.09	LANDSCAPE DETAILS
L6.10	LANDSCAPE DETAILS (IB018)
L6.11	LANDSCAPE DETAILS
L7.01	LANDSCAPE IRRIGATION NOTES AND LEGEND
L7.02	LANDSCAPE IRRIGATION PLAN
L7.03	LANDSCAPE IRRIGATION DETAILS

ABBREVIATIONS

@	AT
AC	ASPHALTIC CONCRETE
AD	AREA DRAIN
ARCH	ARCHITECT
B & B	BALL AND BURLAP
BC	BOTTOM OF CURB
BLDG	BUILDING
BS	BOTTOM OF STEP
BW	BOTTOM OF WALL
CA	CONSTANT ARC
CAL	CALIPER
CB	CATCH BASIN
CH	CONCRETE HEADER
CJ	CONTROL JOINT
CL	CENTER LINE
CLR	CLEARANCE
CO	CLEAN OUT
COJ	CONSTRUCTION JOINT
CONC	CONCRETE
CONT	CONTINUOUS
CUP	CONCRETE UNIT PAVER
CWAD	COORDINATE WITH ARCHITECT'S DRAWINGS
CWCD	COORDINATE WITH CIVIL DRAWINGS
CWSD	COORDINATE WITH STRUCTURAL DRAWINGS
DIA	DIAMETER
DN	DOWN
EA	EACH
EF	EACH FACE
EJ	EXPANSION JOINT
EL	ELEVATION
EQ	EQUAL
EW	EACH WAY
EX	EXISTING
FCJ	FORMED CONTROL JOINT
FF	FINISH FLOOR
FG	FINISH GRADE
FH	FIRE HYDRANT
FL	FLOW LINE
FOW	FACE OF WALL
FS	FINISH SURFACE
GB	GRADE BREAK
GJ	GROUT JOINT
HH	HANDHOLE
HP	HIGH POINT
ID	INSIDE DIAMETER
IE	INVERT ELEVATION
LOW	LIMIT OF WORK
LP	LOW POINT
MAX	MAXIMUM
MFR	MANUFACTURER
MH	MANHOLE
MIN	MINIMUM
NIC	NOT IN CONTRACT
NTS	NOT TO SCALE
OC	ON CENTER
OCEW	ON CENTER EACH WAY
OD	OUTSIDE DIAMETER
PA	PLANTING AREA
PED	PEDESTRIAN
PERF	PERFORATED
POC	POINT OF CONNECTION
PT	POINT OF TANGENCY
R	RADIUS
RB	ROOT BARRIER
RE	RIM ELEVATION
RIM	RIM ELEVATION
ROW	RIGHT OF WAY
S	SLOPE
SAD	SEE ARCHITECTURAL DRAWINGS
SCD	SEE CIVIL DRAWINGS
SD	STORM DRAIN
SED	SEE ELECTRICAL DRAWINGS
SGB	SUBGRADE GRADE BREAK
SGS	SUBGRADE SURFACE
SH	STEEL HEADER
SIM	SIMILAR
SJ	SCORE JOINT
SLD	SEE LIGHTING DRAWINGS
SS	STAINLESS STEEL
SSD	SEE STRUCTURAL DRAWINGS
T & B	TOP AND BOTTOM
TB	TOP OF BAND
TBD	TO BE DETERMINED
TC	TOP OF CURB
TCJ	TOOLED CONTROL JOINT
TH	TOP OF HEADER
TS	TOP OF STEP
TYP	TYPICAL
VEH	VEHICULAR
VIF	VERIFY IN FIELD
WPM	WATER PROOF MEMBRANE
WWF	WELDED WIRE FABRIC

NOTES

1. PLANS AND SPECIFICATIONS FOR BIDDING ONLY. NOT FOR CONSTRUCTION. REFER TO SPECIFICATIONS FOR ADDITIONAL REQUIREMENTS.

2. IT IS THE CONTRACTOR'S RESPONSIBILITY TO OBTAIN COPIES OF CURRENT SPECIFICATIONS AND DRAWINGS OF PUBLIC AND PRIVATE AGENCIES.

3. ALL WORK TO BE PERFORMED IN ACCORDANCE WITH APPLICABLE LAWS, CODES AND REGULATIONS. ALL REQUIRED INSPECTIONS AND PERMITS SHALL BE PROVIDED BY CONTRACTOR. NOTIFY THE APPROPRIATE INDIVIDUAL OR AGENCY TWO (2) WORKING DAYS PRIOR TO THE TIME THAT THE CONTRACTOR WISHES THE INSPECTIONS BE MADE.

4. REPORT DISCREPANCIES IN DRAWINGS OR SPECIFICATIONS TO THE LANDSCAPE ARCHITECT FOR CLARIFICATIONS AND ADJUSTMENTS BEFORE COMMENCING WORK. ANY DEVIATIONS OR CHANGES IN THESE DRAWINGS WITHOUT WRITTEN ACCEPTANCE OF THE LANDSCAPE ARCHITECT SHALL ABSOLVE THE LANDSCAPE ARCHITECT OF ANY AND ALL RESPONSIBILITY OF SAID DEVIATION OR CHANGE.

5. WRITTEN DIMENSIONS TAKE PRECEDENCE OVER SCALED DIMENSIONS.

6. REFER TO ARCHITECTURAL, CIVIL AND ELECTRICAL DRAWINGS FOR ADDITIONAL INFORMATION AND REQUIREMENTS.

7. PROTECT EXISTING UTILITY SURFACE FACILITIES TO REMAIN SUCH AS VAULTS, VALVE BOXES, HAND HOLES, METERS, POLES, ETC. DURING CONSTRUCTION UNLESS NOTED OTHERWISE.

8. EXISTING UNDERGROUND UTILITIES AND IMPROVEMENTS ARE SHOWN IN THEIR APPROXIMATE LOCATIONS BASED UPON RECORD INFORMATION AVAILABLE TO THE LANDSCAPE ARCHITECT AT THE TIME OF PREPARATION OF THESE PLANS. LOCATIONS MAY NOT HAVE BEEN VERIFIED IN THE FIELD AND NO GUARANTEE IS MADE AS TO THE ACCURACY OR COMPLETENESS OF THE INFORMATION SHOWN. THE EXACT LOCATION AND ELEVATION OF UTILITIES SHALL BE DETERMINED BY THE CONTRACTOR. CONTRACTOR SHALL ALSO ASCERTAIN WHETHER ANY ADDITIONAL FACILITIES OTHER THAN SHOWN ON THE PLANS MAY BE PRESENT.

9. EXISTING ELEVATIONS OF SOILS AND SURFACE CIVIL STRUCTURES ARE SHOWN IN THEIR APPROXIMATE LOCATIONS BASED UPON THE INFORMATION PROVIDED TO THE LANDSCAPE ARCHITECT AT THE TIME OF PREPARATION OF THESE DRAWINGS. ELEVATIONS AND LOCATIONS MAY NOT HAVE BEEN VERIFIED IN THE FIELD. THE LANDSCAPE ARCHITECT MAKES NO REPRESENTATION AS TO THE ACCURACY OR COMPLETENESS OF THE LOCATION OF EXISTENCE OR NON-EXISTENCE OF ANY UNDERGROUND UTILITIES OR STRUCTURES WITHIN THE LIMITS OF THE PROJECT. THE CONTRACTOR AGREES TO ASSUME LIABILITY AND TO HOLD OWNER, ARCHITECT, LANDSCAPE ARCHITECT, ENGINEER AND CITY HARMLESS FOR ANY DAMAGES RESULTING FROM THE EXISTINCE OF UNDERGROUND UTILITIES OR STRUCTURES NOT OF RECORD OR NOT SHOWN ON THESE PLANS. THE CONTRACTOR IS REQUIRED TO TAKE DUE PRECAUTIONARY MEASURES TO PROTECT THE UTILITIES OR STRUCTURES SHOWN AND ANY OTHER UTILITIES OR STRUCTURES FOUND AT THE SITE. THE EXACT LOCATIONS AND ELEVATIONS SHALL BE PROVIDED BY THE CONTRACTOR PRIOR TO CONSTRUCTION.

10. CONTACT USA AT (800) 227-2600 AT LEAST TWO (2) WORKING DAYS IN ADVANCE OF CONSTRUCTION TO ASSURE THAT ALL EXISTING UTILITIES HAVE BEEN INDICATED. VERIFY AND CLEARLY MARK UTILITY LOCATIONS PRIOR TO COMMENCING WORK. COSTS INCURRED AS A RESULT OF CONTRACTOR'S FAILURE TO VERIFY LOCATIONS OF EXISTING UTILITIES PRIOR TO BEGINNING OF CONSTRUCTION SHALL BE BORNE BY THE CONTRACTOR.

11. PROTECT EXISTING WATER, SEWER, DRAINAGE, AND TELEPHONE MAINLINES AND SERVICES THAT ARE TO REMAIN IN PLACE FROM DAMAGE.

12. IF LIVE UTILITIES ARE ENCOUNTERED, NOT INDICATED PREVIOUSLY, PROTECT THE SAME FROM DAMAGE AND IMMEDIATELY NOTIFY THE OWNER'S REPRESENTATIVE AND THE AFFECTED UTILITY PROVIDER. DO NOT PROCEED UNTIL FURTHER INSTRUCTIONS ARE RECEIVED.

13. ALL EARTHWORK SHALL BE PERFORMED IN ACCORDANCE WITH THE REQUIREMENTS OF 'GEOTECHNICAL INVESTIGATION ON PROPOSED SOLANO COMMUNITY COLLEGE, NORTHGATE BUSINESS PARK -- PARCEL 8, COLUMBUS PARKWAY, VALLEJO, CA, FOR KCEM -- SOLANO COMMUNITY COLLEGE" DATED 1 NOVEMBER, 2004, PREPARED BY KC ENGINEERING COMPANY, VACAVILLE, CA, (707) 447-4025.

14. MAKE TRANSITIONS BETWEEN CHANGES IN PAVING SMOOTH AND GRADUAL WITH NO SHARP OR ABRUPT CHANGES UNLESS SHOWN OTHERWISE.

15. PITCH IN DRAIN PIPES SHALL BE CONSTANT FROM INVERT ELEVATION TO INVERT ELEVATION. PITCH IN 4" DIAMETER PIPES SHALL BE 2% MINIMUM. PITCH IN 6" DIAMETER PIPES SHALL BE 1% MINIMUM.

16. OBTAIN AESTHETIC ACCEPTANCE OF ROUGH GRADING PRIOR TO AMENDING SOIL.

17. OBTAIN AESTHETIC ACCEPTANCE OF FINE GRADING PRIOR TO PLANTING.

18. RIM ELEVATIONS ARE APPROXIMATE. INSTALL RIMS EVEN WITH AND AT THE SAME SLOPES AS PAVING FINISHED SURFACE OR PLANTING AREA SOIL FINISHED GRADES.

19. OBTAIN ACCEPTANCE OF HORIZONTAL ALIGNMENT OF ELEMENTS IN THE FIELD PRIOR TO INSTALLATION.

20. PLANT LOCATIONS TAKE PRECEDENCE OVER IRRIGATION VALVE BOX LOCATIONS. MOVE INSTALLED IRRIGATION VALVE BOXES CONFLICTING WITH ACCEPTED PLANT LOCATIONS.

21. OBTAIN ACCEPTANCE OF PLANT MATERIAL LOCATIONS IN THE FIELD PRIOR TO INSTALLATION OF TREE BUBBLER PIPE AND HEADS.

22. THESE DRAWINGS AND SPECIFICATIONS ARE SUBJECT TO MODIFICATIONS DURING CONSTRUCTION SHOULD CONDITIONS ARISE THAT WERE NOT APPARENT DURING DESIGN. ANY SUCH MODIFICATIONS SHALL BE ACCEPTED BY THE LANDSCAPE ARCHITECT.

23. REFER TO CIVIL DRAWINGS FOR VEHICULAR PAVING, CURBS, PARKING LOT CROSS WALKS, AND PARKING LOT CURB STOPS.

GENERAL - ALL SHEETS

- ALIGN
- BREAKLINE
- CENTERLINE
- (M) COLUMN LINE
- DTL. — DETAIL NUMBER
- SHT. — SHEET NUMBER
- ENLARGED PLAN
- LIMIT OF WORK
- (X) REVISION
- SECTION / ELEVATION DETAIL
- 1:1 SLOPE

MATERIALS PLAN LEGEND

- CONCRETE PAVING - TYPE I
  - COLOR: STEADMAN BUFF, REFER TO SPECIFICATIONS
  - FINISH: LIGHT SANDBLAST, SKID RESISTANCE PER CBC
- CONCRETE PAVING - TYPE 2
  - COLOR: FRENCH GREY, REFER TO SPECIFICATIONS
  - FINISH: MEDIUM BROOM, SKID RESISTANCE PER CBC
- CONCRETE PAVING - TYPE 3
  - COLOR: PECAN TAN, REFER TO SPECIFICATIONS
  - FINISH: MEDIUM SANDBLAST, SKID RESISTANCE PER CBC
- COBBLESTONE
- DETECTABLE TILE PAVING
  -OVER CONCRETE SUBSLAB
- ROCK MULCH
- BRICK PAVING (IB018)
- REDWOOD HEADER
  - 2" X 6"
- WATER BARRIER
- UPLIGHT
  - SED
- POLE LIGHT
  -SED
- PATH LIGHT
  -SED
- FLAGPOLE (IB018)

LAYOUT PLAN LEGEND

- CONTROL JOINT
- 1'-0" DIMENSION
- EXPANSION JOINT
- UPLIGHT
  - SED
- POLE LIGHT
  -SED
- PATH LIGHT
  -SED
- ACCESSIBILITY SIGNAGE,
  - SAD FOR SIGN TYPES
- ACCESSIBILITY SIGNAGE,
  - SAD FOR SIGN TYPES
- ACCESSIBILITY SIGNAGE,
  - SAD FOR SIGN TYPES
- ACCESSIBLE SEATING
- FLAGPOLE (IB018)

GRADING PLAN LEGEND

- 224 EXISTING CONTOUR
- 30 PROPOSED CONTOUR
- <227.5> EXISTING OR PROPOSED SPOT ELEVATION BY ARCHITECT OR CIVIL
- 227.5 PROPOSED SPOT ELEVATION

GRADING PLAN LEGEND, CONT.

- 227.5 HIGH POINT ELEVATION
- SURFACE SWALE
- SURFACE GRADE BREAK
- 4" AREA DRAIN WITH FLAT GRATE
- 6" AREA DRAIN WITH FLAT GRATE
- 4" AREA DRAIN WITH ATRIUM GRATE
- 6" AREA DRAIN WITH ATRIUM GRATE
- CIVIL DRAIN
  -SCD

DRAIN/PIPING PLAN LEGEND

- 4" AREA DRAIN WITH FLAT GRATE
- 6" AREA DRAIN WITH FLAT GRATE
- 4" AREA DRAIN WITH ATRIUM GRATE
- 6" AREA DRAIN WITH ATRIUM GRATE
- CIVIL DRAIN
  -SCD (2)
- CLEANOUT
- SOLID LANDSCAPE DRAINLINE
- PERFORATED SUBDRAINAGE DRAIN PIPE
- CIVIL STORM DRAIN PIPE
  -SCD

PLANTING PLAN LEGEND

- QUERCUS LOBATA
  -48" BOX
- QUERCUS LOBATA
  -24" BOX
- ULMUS PARVIFOLIA 'DRAKE'
  -15 GALLON
- PISTACIA CHINENSIS
  -15 GALLON
- POPULUS NIGRA 'ITALICA'
  -5 GALLON
- GINKGO BILOBA 'PRINCETON SENTRY'
  -24" BOX
- CERCIS CANADENSIS
  -15 GALLON
- MELALEUCA QUINQUENERVIA (2 / L6.10)
  -15 GALLON
  - SEE DETAIL FOR SYMBOL
- BACCHARIS PILUARIS 'TWIN PEAKS' (2 / L6.10)
  -5 GALLON
  - SEE DETAIL FOR SYMBOL
- BIO SWALE PLANTINGS
  - HYDROSEEDED, SEE SPECIFICATIONS
- CALAMAGROSTIS 'KARL FORESTER'
  - 1 GALLON, 9" OFFSET FROM PAVING EDGES TO FIRST ROW OF PLANTS, 18" OC TYP.
  - ALLOW FOR 2" OF WOOD CHIP MULCH OVER ENTIRE PLANTING BED
- EQUISETUM HYEMALE
  - 1 GALLON, 9" OFFSET FROM PAVING EDGES TO FIRST ROW OF PLANTS, 18" OC TYP
  - ALLOW FOR 2" OF WOOD CHIP MULCH OVER ENTIRE PLANTING BED
- MEADOW
  - HYDROSEEDED, SEE SPECIFICATIONS
  - ALLOW FOR TEMPORARY IRRIGATION AS NECESSARY FOR ESTABLISHMENT
- TURF GRASS
  - SEE SPECIFICATIONS
- NATIVE LAWN
  - HYDROSEEDED, SEE SPECIFICATIONS
- DRAINAGE
  PERFORATED SUBSURFACE DRAIN PIPE
- SOLID STORM DRAIN PIPE

FOR PURPOSES OF BIDDING, CONTRACTOR TO ASSUME THAT ALL CONSTRUCTION WITHIN THE LIMIT OF WORK WILL BE CONCURRENT WITH CONSTRUCTION BY THE CITY OF VALLEJO OF PART OR ALL OF THE COLUMBUS PARKWAY IMPROVEMENTS SHOWN OUTSIDE THE LIMITS OF WORK.

APPROVAL STAMP
IDENTIFICATION STAMP
DIVISION OF THE STATE ARCHITECT
APPL 02- 107417
AC ____ FLS ____ SS ____
DATE: ____

NO.	ISSUED FOR	DATE
IB018	INFORMATION BULLETIN #18	06/18/07
2	ADDENDUM #2	02/21/06
1	DSA APPROVAL SET	12/08/05

REGISTERED LANDSCAPE ARCHITECT
DAVID MEYER - No. 25..
Signature
6/18/07
Date
STATE OF CALIFORNIA

K M D
KAPLAN McLAUGHLIN DIAZ
ARCHITECTURE PLANNING
222 VALLEJO SAN FRANCISCO, CA 94111
(415) 398-5191 FAX (415) 394-7158

MEYER + SILBERBERG LAND ARCHITECTS
1443 Cornell Ave Berkeley CA 94702
tel 510 559 2973 fax 510 898 0488
www.meyersilberberg.com

SOLANO COMMUNITY COLLEGE

SCCD
VALLEJO CENTER
Contract # A003.6123.01.V1

PROJECT NO. 419-201
DATE 12-08-05

INDEX, NOTES & LEGEND

AS BUILTS

L0.00

PLOT DATE:

COPYRIGHT © 2004 BY KMD (KAPLAN McLAUGHLIN DIAZ). ALL RIGHTS RESERVED.

PATH: G:\000\000-000\ACAD\SHEETS\

COLUMBUS PARKWAY

GATE ADDED BY INFORMATION BULLETIN 30 LOCATION COORDINATED TO MISS POLE LIGHT

DIMENSION ADJUSTED TO COORDINATE WITH LIGHT POLE

CROSSWALK - SCD

PARKING - SCD

POLE LIGHT TYP SYMBOL - SED

CROSSWALK - SCD

CROSSWALK - SCD

CONCRETE CURB - SCD

PARKING LOT SIDEWALK - SCD

SIDEWALK - SCD

DETECTABLE TILE

DETECTABLE TILE ADDED

TYPE BOLLARDS ADDED BY INFORMATION BULLETIN 30

ACCESSIBLE PASSENGER LOADING

DROP OFF

CROSSWALKS - SCD

RAMP - SCD

RAMP - SCD

CROSSWALK - SCD

ACCESSIBLE BUS PATH

CITY BUS STOP

SIM 2 / L6.05

BICYCLE PARKING

NOTE: COORDINATE WITH PUBLIC WORKS CONTRACTOR FOR DOWELING INTO PUBLIC SIDEWALK.

WATER BARRIER TYP SYMBOL

AC PAVING - SCD

TRASH, RECYCLING & TRANSFORMER ENCLOSURE - SAD

4 / L6.04

9 / L6.04

CONCRETE PAVING TYPE II TYP. SYMBOL

ROCK MULCH TYP. SYMBOL

2 / L6.04 CONCRETE PAVING

8 / L6.04 ROCK MULCH

1 / L6.07 REDWOOD HEADER

SIM 2 / L6.05

REDWOOD HEADER TYP. SYMBOL

5 / L6.09 PATH LIGHT TYP. SYMBOL - SED

1 / L6.01 MATERIALS BLOW UP PLAN

8 / L6.09 CONCRETE CURB

4 / L6.04

4 / L6.10

7 / L6.04

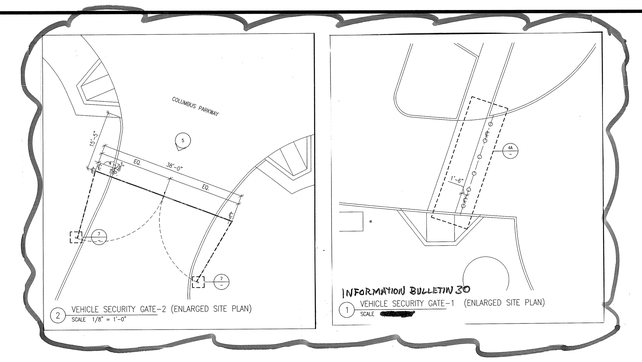

2 VEHICLE SECURITY GATE-2 (ENLARGED SITE PLAN) SCALE 1/8" = 1'-0"

1 VEHICLE SECURITY GATE-1 (ENLARGED SITE PLAN) SCALE

NOTES:

1) REFER TO SHEET L0.00 FOR LEGEND.

2) REFER TO A1.30 FOR SITE SIGNAGE AND LANDSCAPE LAYOUT PLANS FOR LOCATIONS OF SIGNAGE.

3) SEE CIVIL DRAWINGS FOR LAYOUT, DRAINAGE AND GRADING NOT SHOWN ON LANDSCAPE PLANS.

FOR PURPOSES OF BIDDING, CONTRACTOR TO ASSUME THAT ALL CONSTRUCTION WITHIN THE LIMIT OF WORK WILL BE CONCURRENT WITH CONSTRUCTION BY THE CITY OF VALLEJO OF PART OR ALL OF THE COLUMBUS PARKWAY IMPROVEMENTS SHOWN OUTSIDE THE LIMITS OF WORK.

APPROVAL STAMP

IDENTIFICATION STAMP
DIVISION OF THE STATE ARCHITECT
APPL 02- 107417
AC ____ FLS ____ SS ____
DATE: ____

BO.34	INFORMATION BULLETIN #34	07/18/07
BZ1-R1	INFORMATION BULLETIN #21-R1	06/22/07
BO.18	INFORMATION BULLETIN #18	06/18/07
BZ1	INFORMATION BULLETIN #21	06/01/07
BO.8	INFORMATION BULLETIN #08	01/16/07
1	DSA APPROVAL SET	12/08/05
NO.	ISSUED FOR	DATE

REGISTERED LANDSCAPE ARCHITECT DAVID MEYER - No. 2565 Signature Date STATE OF CALIFORNIA

K M D
KAPLAN McLAUGHLIN DIAZ
ARCHITECTURE PLANNING
222 VALLEJO SAN FRANCISCO, CA 94111
(415) 398-5191 FAX (415) 394-7158

MEYER + SILBERBERG LAND ARCHITECTS
1443 Cornell Ave Berkeley CA 94702
tel 510 559 2973 fax 510 898 0488
www.meyersilberberg.com

SOLANO COMMUNITY COLLEGE

SCCD
VALLEJO CENTER
Contract # A003.6123.01.V1

PROJECT NO. 419-201 | DATE 12-08-05

LANDSCAPE MATERIALS PLAN

L1.01

0 15 30 60 FEET

N

PLOT DATE:

COPYRIGHT © 2004 BY KMD (KAPLAN McLAUGHLIN DIAZ). ALL RIGHTS RESERVED.

PATH: G:\000\000-000\ACAD\SHEETS\

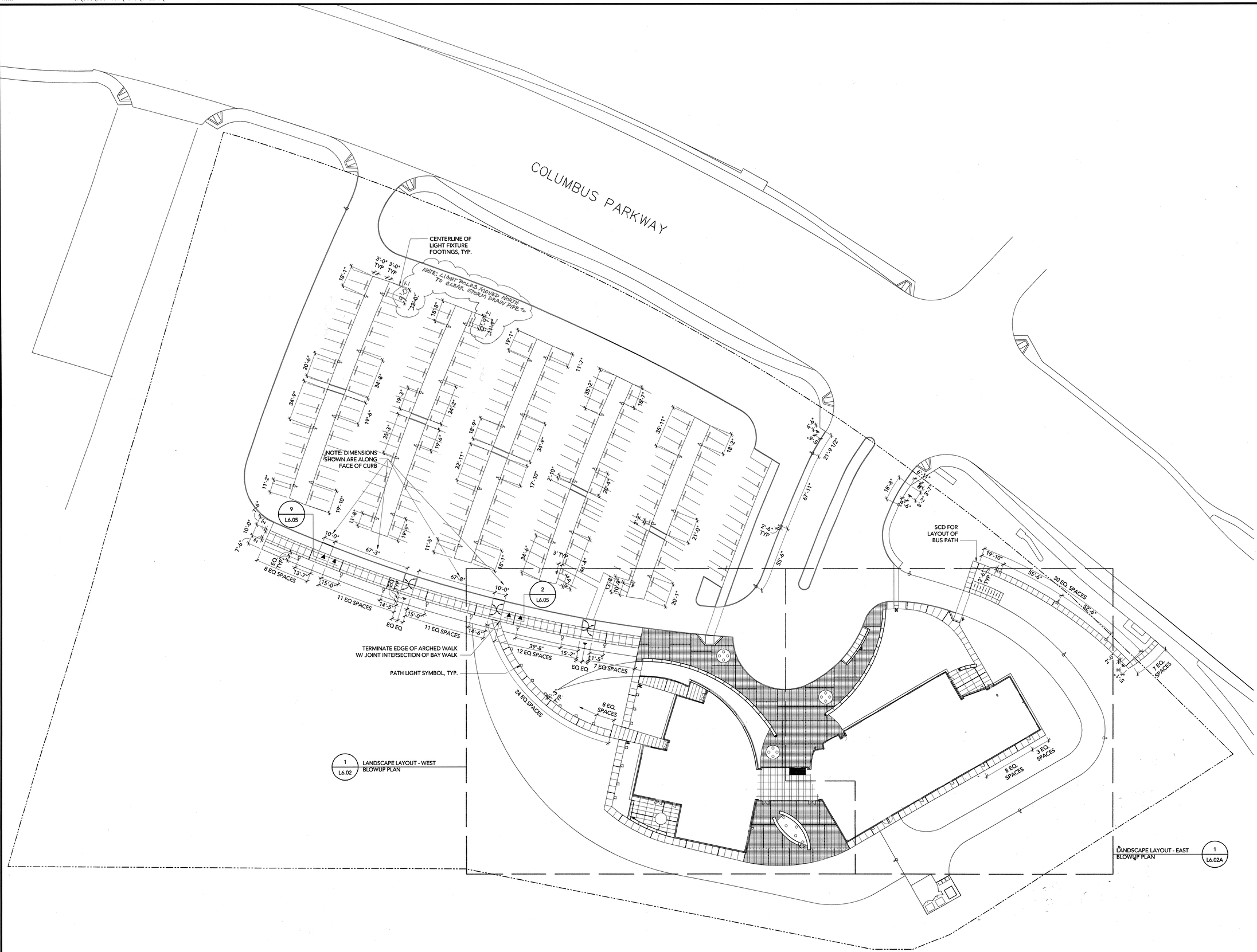

NOTES:

1) ARCS SHALL BE SMOOTH AND CONTINUOUS BETWEEN POINTS ON LAYOUT PLAN.

2) SEE SHT. L6.02B FOR ADDITIONAL JOINT LAYOUT IN BLOWUP AREAS.

3) SEE CIVIL DRAWING C1.01 FOR OVERALL SITE DIMENSIONING NOT SHOWN WITHIN LANDSCAPE LAYOUT PLANS.

4) REFER TO SHEET L0.00 FOR LEGEND.

APPROVAL STAMP
IDENTIFICATION STAMP
DIVISION OF THE STATE ARCHITECT
APPV 02- 107417
ACT FLS TH SS
DATE: 12/21/05

NO.	ISSUED FOR	DATE
1	DSA APPROVAL SET	12/08/05

REGISTERED LANDSCAPE ARCHITECT
DAVID MEYER - No. 2565
Signature
12/08/05
Date
STATE OF CALIFORNIA

K M D
KAPLAN McLAUGHLIN DIAZ
ARCHITECTURE PLANNING
222 VALLEJO SAN FRANCISCO, CA 94111
(415) 398-5191 FAX (415) 394-7158

MEYER + SILBERBERG
LAND ARCHITECTS
1443 Cornell Ave Berkeley CA 94702
tel 510 559 2973 fax 510 898 0488
www.meyersilberberg.com

SOLANO
COMMUNITY COLLEGE

SCCD
VALLEJO CENTER
Contract # A003.6123.01.V1

PROJECT NO.	DATE
419-201	12-08-05

LANDSCAPE
LAYOUT PLAN
AS BUILTS

L2.01

PLOT DATE:

COPYRIGHT © 2004 BY KMD (KAPLAN McLAUGHLIN DIAZ). ALL RIGHTS RESERVED.

PATH: G:\000\000-000\ACAD\SHEETS\

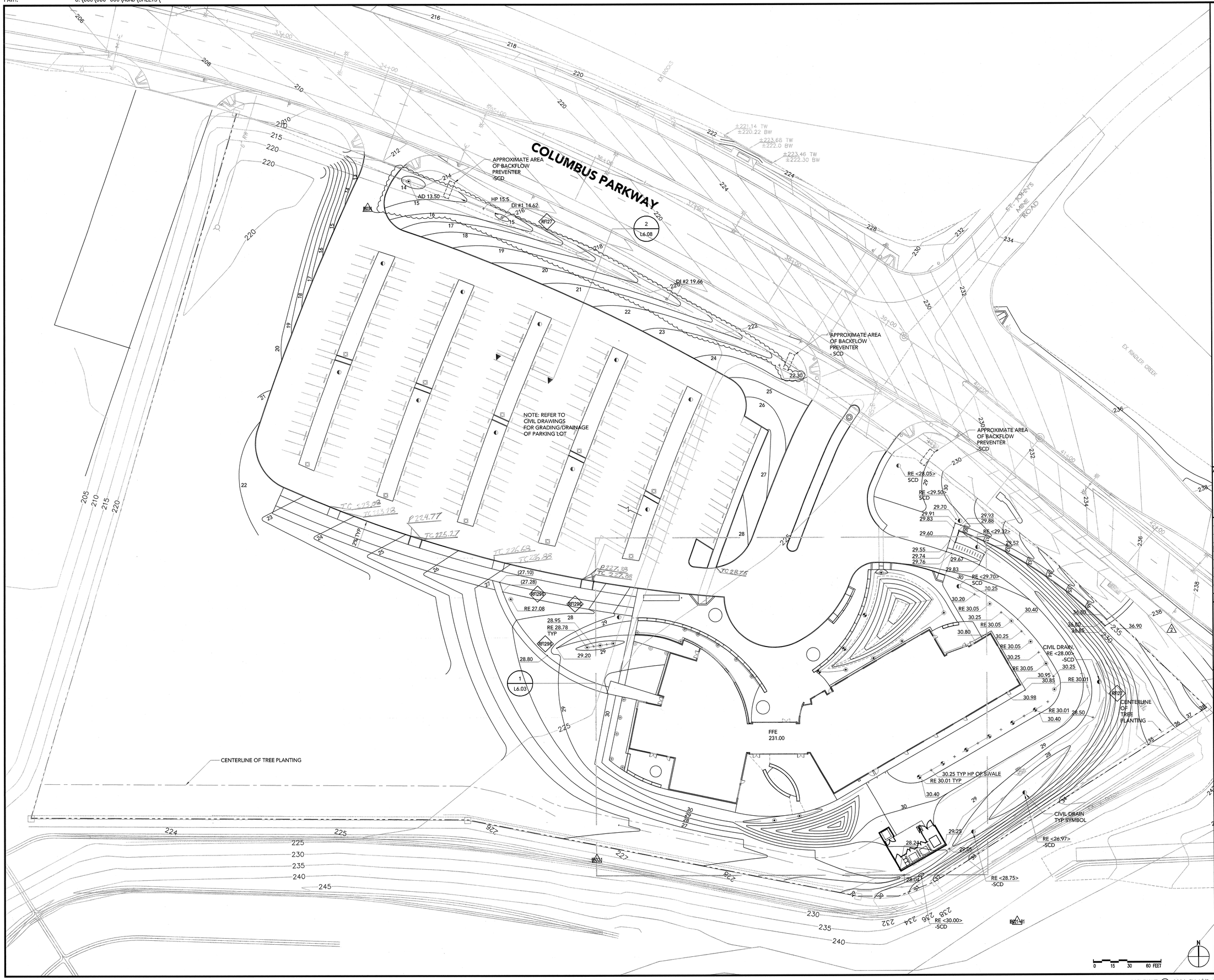

NOTES:

1) ALL ELEVATION NOTATIONS ARE ABBREVIATED FROM 2XX.XX TO XX.XX.

2) REFER TO SHEET L0.00 FOR LEGEND.

3) REFER TO A1.30 FOR SITE SIGNAGE AND LANDSCAPE LAYOUT PLANS FOR LOCATIONS OF SIGNAGE.

FOR PURPOSES OF BIDDING, CONTRACTOR TO ASSUME THAT ALL CONSTRUCTION WITHIN THE LIMIT OF WORK WILL BE CONCURRENT WITH CONSTRUCTION BY THE CITY OF VALLEJO OF PART OR ALL OF THE COLUMBUS PARKWAY IMPROVEMENTS SHOWN OUTSIDE THE LIMITS OF WORK.

APPROVAL STAMP

IDENTIFICATION STAMP
DIVISION OF THE STATE ARCHITECT
APPL 02- 107417
AC _____ FLS _____ SS _____
DATE: _____

NO.	ISSUED FOR	DATE
BW24	INFORMATION BULLETIN #34	07/18/07
BW21-R1	INFORMATION BULLETIN #21-R1	06/22/07
BW21	INFORMATION BULLETIN #21	06/01/07
RFI296	RFI #296	05/10/07
RFI27	RFI #27	06/13/06
2	ADDENDUM #2	02/21/06
1	DSA APPROVAL SET	12/08/05

REGISTERED LANDSCAPE ARCHITECT
DAVID MEYER - No. 2845
Signature
Date
STATE OF CALIFORNIA

K M D
KAPLAN McLAUGHLIN DIAZ
ARCHITECTURE PLANNING
222 VALLEJO SAN FRANCISCO, CA 94111
(415) 398-5191 FAX (415) 394-7158

MEYER + SILBERBERG
LAND ARCHITECTS
1443 Cornell Ave Berkeley CA 94702
tel 510 559 2973 fax 510 898 0488
www.meyersilberberg.com

SOLANO COMMUNITY COLLEGE

SCCD
VALLEJO CENTER
Contract # A003.6123.01.V1

PROJECT NO. 419-201
DATE 12-08-05

LANDSCAPE GRADING PLAN

L3.01

PLOT DATE:

COPYRIGHT © 2004 BY KMD (KAPLAN McLAUGHLIN DIAZ). ALL RIGHTS RESERVED.

PATH: G:\000\000-000\ACAD\SHEETS\

COLUMBUS PARKWAY

PITCH PIPE @ .5% MIN TO CIVIL D.I.

TIE INTO CIVIL DRAIN INLET

AD 13.50
IE 12.00

DI #1 14.62

TIE SUBDRAINAGE INTO CIVIL DRAINAGE SYSTEM, TYP. - SCD

DI #2 19.66

2 / L6.08

CO IE 17.95

CO IE 19.50

CO IE 21.84

CO IE 22.10

CO IE 23.35

CONNECT LANDSCAPE DRAIN LINES INTO CIVIL DRAIN

CIVIL DRAIN -SCD
RE <29.37>
IE <24.51>

1 / L6.09 SIM

CIVIL STORM DRAIN LINE - SCD

TYPICAL CLEANOUT LAYOUT NOTES:
1. CENTER CLEANOUT IN ISLANDS, 3' OFF OF PARKING LOT EDGE OR SIDEWALK, TYP.
2. FIELD VERIFY THAT CLEANOUTS DON'T CONFLICT WITH PULL BOX LOCATIONS.

6 / L6.09

RE 27.08 RF129
IE 25.80

RE 28.90

RE 30.50
IE 28.50

RE 30.20

RF129

IE 26.78

RE 28.78

EQ EQ 18" TYP

RE 30.10
RE 30.20

RE 30.27

IE 28.50

INSTALL DRAINS WITH RE 2" BELOW LOWEST POINT OF ADJACENT PAVEMENT SURFACE

RE 30.37
IE 27.37

LANDSCAPE PERFORATED SUBSURFACE DRAIN PIPE - TYP SYMBOL

DAYLIGHT PIPE - INVERT OF OUTFALL SHALL BE 3" ABOVE FLOW LINE OF SWALE AND AT EROSION CONTROL MEASURES PROVIDED BY CIVIL/ AT CIVIL DAYLIGHTED PIPE

RE 29.84

RE 30.30

RE 30.10

RE 30.05

RE 30.30
IE 27.30

RE 30.36

RE 30.48

RE 30.32
IE 29.[illegible]

RF1-029

LANDSCAPE AREA DRAIN -TYP. SYMBOL

RE 30.01

RE 30.01 TYP
IE 28.01

RE 29.40

RE 29.55
IE 28.05

CIVIL DRAIN -SCD

CONNECT LANDSCAPE DRAIN LINES INTO CIVIL DRAIN

CIVIL STORM DRAIN LINE - SCD

CIVIL DRAIN SCD
RE <29.70>
IE 21.77

CIVIL DRAIN -SCD

6" LANDSCAPE DRAIN-DAYLIGHT INTO SWALE RS1-171

NOTE: SEE DWG L5.01 FOR AS BUILT ROUTING OF LANDSCAPE DRAINAGE PIPES

0 15 30 60 FEET

N

NOTES:

1) ALL ELEVATION NOTATIONS ARE ABBREVIATED FROM 2XX.XX TO XX.XX.

2) REFER TO SHEET L0.00 FOR LEGEND.

3) REFER TO A1.30 FOR SITE SIGNAGE AND LANDSCAPE LAYOUT PLANS FOR LOCATIONS OF SIGNAGE.

FOR PURPOSES OF BIDDING, CONTRACTOR TO ASSUME THAT ALL CONSTRUCTION WITHIN THE LIMIT OF WORK WILL BE CONCURRENT WITH CONSTRUCTION BY THE CITY OF VALLEJO OF PART OR ALL OF THE COLUMBUS PARKWAY IMPROVEMENTS SHOWN OUTSIDE THE LIMITS OF WORK.

APPROVAL STAMP

IDENTIFICATION STAMP
DIVISION OF THE STATE ARCHITECT
APPL 02- 107417
AC ____ FLS ____ SS ____
DATE: ____

NO.	ISSUED FOR	DATE
#34	INFORMATION BULLETIN #34	07/18/07
1	DSA APPROVAL SET	12/08/05

REGISTERED LANDSCAPE ARCHITECT
DAVID MEYER - No. 2265
Signature
Date
STATE OF CALIFORNIA

K M D
KAPLAN McLAUGHLIN DIAZ
ARCHITECTURE PLANNING
222 VALLEJO SAN FRANCISCO, CA 94111
(415) 398-5191 FAX (415) 394-7158

MEYER + SILBERBERG LAND ARCHITECTS
1443 Cornell Ave Berkeley CA 94702
tel 510 559 2973 fax 510 898 0488
www.meyersilberberg.com

SOLANO COMMUNITY COLLEGE

SCCD
VALLEJO CENTER
Contract # A003.6123.01.V1

PROJECT NO. 419-201
DATE 12-08-05

LANDSCAPE DRAIN/PIPING PLAN

L4.01

PLOT DATE:

COPYRIGHT © 2004 BY KMD (KAPLAN McLAUGHLIN DIAZ). ALL RIGHTS RESERVED.

G:\000\000-000\ACAD\SHEETS\

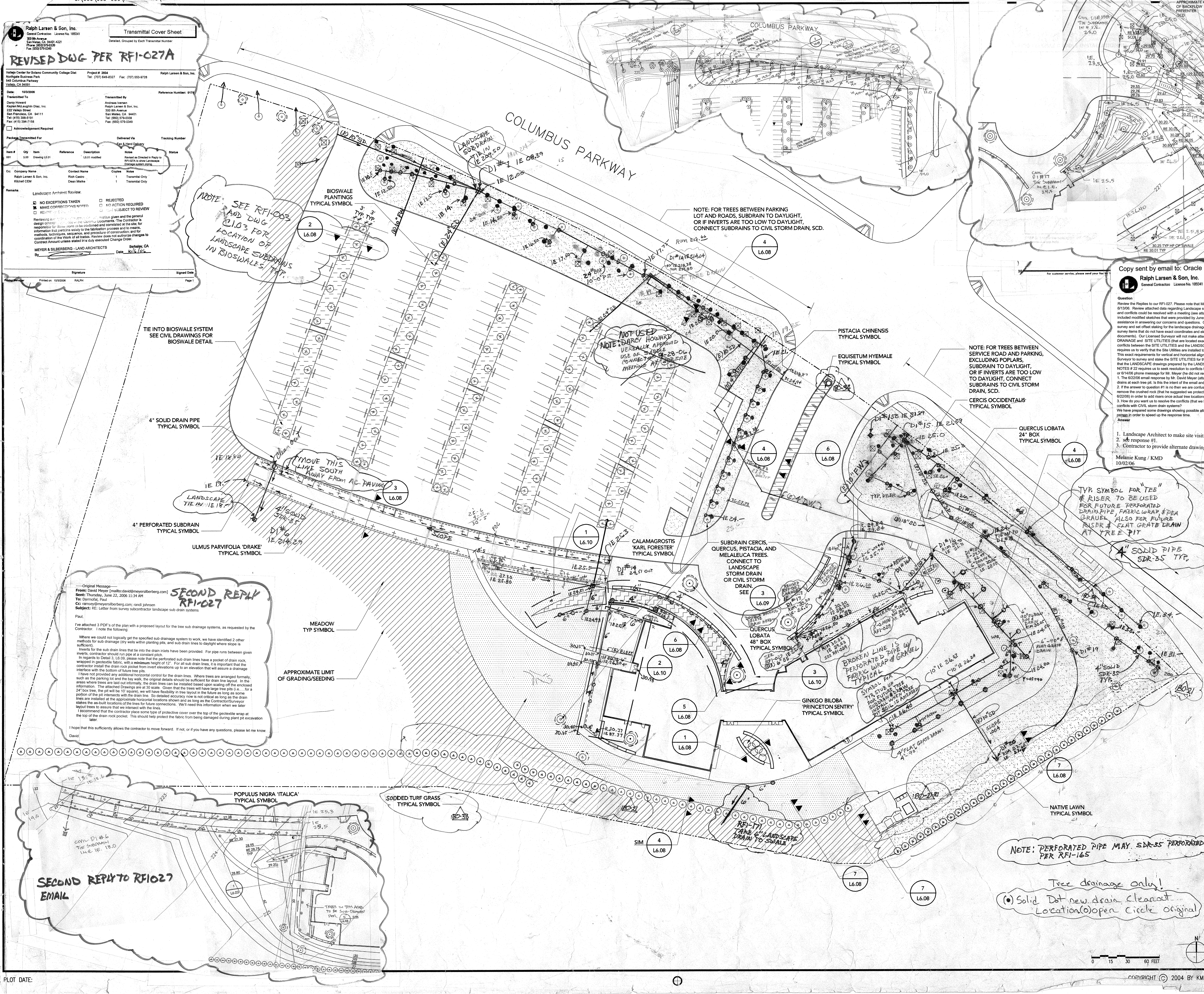

REVISED DWG PER RFI-027A

Ralph Larsen & Son, Inc.
General Contractors License No. 189341
300 8th Avenue
San Mateo, CA 94401-4221
Phone: (650) 579-0339
Fax: (650) 579-0349

Transmittal Cover Sheet
Detailed, Grouped by Each Transmittal Number

Vallejo Center for Solano Community College Dist
Northgate Business Park
545 Columbus Parkway
Vallejo, CA 94591

Project # 2604
Tel: (707) 649-8327 Fax: (707) 553-9728
Ralph Larsen & Son, Inc.

Date: 10/3/2006
Reference Number: 0176

Transmitted To
Darcy Howard
Kaplan McLaughlin Diaz, Inc.
222 Vallejo Street
San Francisco, CA 94111
Tel: (415) 398-5191
Fax: (415) 394-7158

Transmitted By
Andreas Iversen
Ralph Larsen & Son, Inc.
300 8th Avenue
San Mateo, CA 94401
Tel: (650) 579-0339
Fax: (650) 579-0349

☐ Acknowledgement Required

Package Transmitted For	Delivered Via	Tracking Number
	Fax & Hand Delivery	

Item #	Qty	Item	Reference	Description	Notes	Status
001	3.00	Drawing L5.01		L5.01 modified	Revised as Directed in Reply to RFI-027A to show Landscape Drainage system piping.	

Cc: Company Name	Contact Name	Copies	Notes
Ralph Larsen & Son, Inc.	Rich Castro	1	Transmittal Only
Kitchell CEM	Dean Mielke	1	Transmittal Only

Remarks

Landscape Architect Review.

☒ NO EXCEPTIONS TAKEN
☒ MAKE CORRECTIONS NOTED
☐ REVISE & RESUBMIT
☐ REJECTED
☐ NO ACTION REQUIRED
☐ NOT SUBJECT TO REVIEW

Reviewing is only for general conformation with the design concept and the information given and the general ... in the Contract Documents. The Contractor is responsible for dimensions to be confirmed and correlated at the site; for information that pertains solely to the fabrication process and to means, methods, techniques, sequence, and procedure of construction; and for coordination of the Work of all trades. Review does not authorize changes to Contract Amount unless stated in a duly executed Change Order.

MEYER & SILBERBERG - LAND ARCHITECTS Berkeley, CA
By______ Date 10/6/06

Signature Signed Date
Prolog Manager Printed on: 10/3/2006 RALPH Page 1

-----Original Message-----
From: David Meyer [mailto:david@meyersilberberg.com]
Sent: Thursday, June 22, 2006 11:34 AM
To: Darmofal, Paul
Cc: ramsey@meyersilberberg.com; randi johnsen
Subject: RE: Letter from survey subcontractor landscape sub drain systems

SECOND REPLY RFI-027

Paul,

I've attached 3 PDF's of the plan with a proposed layout for the tree sub drainage systems, as requested by the Contractor. I note the following:

Where we could not logically get the specified sub drainage system to work, we have identified 2 other methods for sub drainage (dry wells within planting pits, and sub drain lines to daylight where slope is sufficient).

Inverts for the sub drain lines that tie into the drain inlets have been provided. For pipe runs between given inverts, contractor should run pipe at a constant pitch.

In regards to Detail 3, L6.09, please note that the perforated sub drain lines have a pocket of drain rock, wrapped in geotextile fabric, with a **minimum** height of 12". For all sub drain lines, it is important that the contractor install the drain rock pocket from invert elevations up to an elevation that will assure a drainage interface with the bottom of future tree pits.

I have not provided any additional horizontal control for the drain lines. Where trees are arranged formally, such as the parking lot and the bay walk, the original details should be sufficient for drain line layout. In the areas where trees are laid out informally, the drain lines can be installed based upon scaling off the enclosed information. The attached Drawings are at 30 scale. Given that the trees will have large tree pits (i.e.....for a 24" box tree, the pit will be 10' square), we will have flexibility in tree layout in the future as long as some portion of the pit intersects with the drain line. So detailed accuracy now is not critical as long as the drain lines are installed at the approximate horizontal locations shown and as long as the Contractor/Surveyor stakes the as-built locations of the lines for future connections. We'll need this information when we later layout trees to assure that we intersect with the lines.

I recommend that the contractor place some type of protective cover over the top of the geotextile wrap at the top of the drain rock pocket. This should help protect the fabric from being damaged during plant pit excavation later.

I hope that this sufficiently allows the contractor to move forward. If not, or if you have any questions, please let me know.

David

Copy sent by email to: Oracle Landscape on 1/30/07

Ralph Larsen & Son, Inc.
General Contractors License No. 189341

Request for Information 027A

Question **Date Required: 9/26/2006**

Review the Replies to our RFI-027. Please note that Mr. Darmofal retracted the first reply to RFI-027 with his email dated 6/13/06. Review attached data regarding Landscape subdrain system issues. We continue to believe many of the issues and conflicts could be resolved with a meeting (see attached email request for meeting dated June 16, 2006). We have included modified sketches that were provided by June 22, 2006 email from Mr. Darmofal and the original sketches for assistance in answering our concerns and questions. Our licensed surveyor (Mountain Pacific Surveys) still will not survey and set offset staking for the landscape drainage system. They said that their state license will not allow them to survey items that do not have exact coordinates and elevations (and that are not documented in or on any of the contract documents). Our Licensed Surveyor will not make attempt to resolve conflicts that exist between LANDSCAPE DRAINAGE and SITE UTILITIES (that are located exactly on the Civil drawings). We need to resolve remaining conflicts between the SITE UTILITIES and the LANDSCAPE DRAINAGE SYSTEM. Specification Section 02700-4, 3.01, requires us to verify that the Site Utilities are installed to the dimensions and elevations given on the Contract Drawings. This exact requirements for vertical and horizontal alignment by the CIVIL DRAWINGS is what allowed our Licensed Surveyor to survey and stake the SITE UTILITIES for this project However Drawing L0.00, "NOTES" #1 clearly states that the LANDSCAPE drawings prepared by the LANDSCAPE ARCHITECT are not for construction. Drawing L0.00, NOTES # 22 requires us to seek resolution to conflicts from the Landscape Architect. Per NOTES #22 we left a 6/13/06 or 6/14/06 phone message for Mr. Meyer (he did not respond), and sent the 6/16/06 email request for a meeting).
1. The 6/22/06 email response by Mr. David Meyer (attached) appears to eliminate the need for a risers and flat grate drains at each tree pit. Is this the intent of the email and sketches?
2. If the answer to question #1 is no then we are confused. Does Mr. Meyer want us to unwrap the filter fabric and remove the crushed rock (that he suggested we protect from damage when excavating the tree pits in his email date 6/22/06) in order to add risers once actual tree locations are determined?
3. How do you want us to resolve the conflicts (that we have shown in attached sketches) where the Landscape drainage conflicts with CIVIL storm drain systems?
We have prepared some drawings showing possible alternatives, however we believe these should be discussed in person in order to speed up the response time.

Answer **Date Answered:**

1. Landscape Architect to make site visit.
2. see response #1.
3. Contractor to provide alternate drawings for review.

Melanie Kung / KMD
10/02/06

NOTE: THIS SHEET IS THE DWG. SUBMITTED FOR REVIEW

APPROVAL STAMP
IDENTIFICATION STAMP
DIVISION OF THE STATE ARCHITECT
APP 02- 107417
AC FLS SS
DATE: 12/21/05

NO.	ISSUED FOR	DATE
1	DSA APPROVAL SET	12/08/05

REGISTERED LANDSCAPE ARCHITECT
DAVID MEYER – No. 2565
Signature
12/08/05
Date
STATE OF CALIFORNIA

K M D
KAPLAN McLAUGHLIN DIAZ
ARCHITECTURE PLANNING
222 VALLEJO SAN FRANCISCO, CA 94111
(415) 398-5191 FAX (415) 394-7158

MEYER + SILBERBERG
LAND ARCHITECTS
1443 Cornell Ave Berkeley CA 94702
tel 510 559 2973 fax 510 898 0488
www.meyersilberberg.com

SOLANO
COMMUNITY COLLEGE

SCCD
VALLEJO CENTER
Contract # A003.6123.01.V1

PROJECT NO.	DATE
419-201	12-08-05

LANDSCAPE
PLANTING PLAN
AS BUILTS

ALTERNATE PIPE
L5.01
LAYOUT RFI-027A

PLOT DATE:

COPYRIGHT © 2004 BY KMD (KAPLAN McLAUGHLIN DIAZ). ALL RIGHTS RESERVED.

PATH: G:\000\000-000\ACAD\SHEETS\

RAMP - SCD
3 L6.08
CONCRETE CURB - SCD
CONCRETE PAVEMENT - TYPE 2 TYPICAL SYMBOL
1 L6.04
6 FLUSH CURB L6.06
7 L6.06
5 LIGHT FIXTURES AT NICHE L6.06
2 L6.06
1 L6.06
5 L6.04
3 L6.06
CONCRETE SEATWALL
5 L6.08
4 L6.04
4 L6.04
4 L6.04
4 L6.04
4 L6.04
4 L6.07
9 L6.08
ACCESSIBLE COUNTER
ACCESSIBLE SEATING
9 OUTLETS AND HOSE BIB L6.06
8 L6.06
4 L6.06
COBBLESTONE TYPICAL SYMBOL
SIM 5 L6.08
4 L6.04
2 L6.06
SIM 1 L6.06
5 L6.06
1 L6.07
ACCESSIBLE SEATING
2 L6.04
8 L6.06
4 L6.04
OUTLETS 8 SIM L6.07
UPLIGHT TYPICAL SYMBOL
ROCK MULCH TYPICAL SYMBOL
8 L6.04
4 L6.04
1 L6.08
SIM 8 OUTLETS L6.07
4 L6.04
7 L6.06
6 L6.04
ACCESSIBLE PASSENGER LOADING AREA
8 L6.08
8 OUTLET L6.07
CONCRETE PAVEMENT - TYPE 1 TYPICAL SYMBOL
7 L6.04
BIKE RACK STATION
3 L6.04
3 L6.07
WATER BARRIER TYPICAL SYMBOL
ACCESSIBLE SEATING
2 L6.04
4 L6.04
AC PAVING - SCD
0 5 10 20 FEET
N

NOTES:

1) REFER TO SHEET L0.00 FOR LEGEND.

2) REFER TO A1.30 FOR SITE SIGNAGE AND LANDSCAPE LAYOUT PLANS FOR LOCATIONS OF SIGNAGE.

APPROVAL STAMP
IDENTIFICATION STAMP
DIVISION OF THE STATE ARCHITECT
APPL 02- 107417
FLS SS
DATE: 12/21/05

NO.	ISSUED FOR	DATE
1	DSA APPROVAL SET	12/08/05

REGISTERED LANDSCAPE ARCHITECT
DAVID MEYER - No. 3545
Signature
12/08/05
Date
STATE OF CALIFORNIA

K M D
KAPLAN McLAUGHLIN DIAZ
ARCHITECTURE PLANNING
222 VALLEJO SAN FRANCISCO, CA 94111
(415) 398-5191 FAX (415) 394-7158

MEYER + SILBERBERG
LAND ARCHITECTS
1443 Cornell Ave Berkeley CA 94702
tel 510 559 2973 fax 510 898 0488
www.meyersilberberg.com

SOLANO COMMUNITY COLLEGE

SCCD
VALLEJO CENTER
Cóntract # A003.6123.01.V1

PROJECT NO.	DATE
419-201	12-08-05

LANDSCAPE MATERIALS BLOW UP PLAN
AS BUILTS

L6.01

PLOT DATE:

COPYRIGHT © 2004 BY KMD (KAPLAN McLAUGHLIN DIAZ). ALL RIGHTS RESERVED.

PATH: G:\000\000-000\ACAD\SHEETS\

SEE SHT. L2.01 FOR LAYOUT OF BAYWALK, TYP.

SEE SHT. L2.01 FOR LAYOUT OF LIGHTS ON ARCED PATH, TYP.

SEE SHT. L2.01 FOR LAYOUT OF SIGNS ON BAYWALK, TYP.

SCD FOR RADIUS OF CURB

SEE SHT. L6.02B FOR LAYOUT OF LANDSCAPE WALL

ACTUAL DIMENSION IS MORE THAN 5'-0", VIF.

SEE LANDSCAPE JOINT LAYOUT PLAN, SHT. L6.02B AND LANDSCAPE GRADING BLOWUP PLAN, SHT. L6.03 FOR LAYOUT OF HANDICAP RAMP

NOTE:
TYPICAL UPLIGHT LAYOUT
- ALIGN LIGHTS ON AXIS W/ CENTER POINT OF OPENING AND NORTH, SOUTH, EAST AND WEST DIRECTIONS. OFFSET LIGHTS 2'-6" FROM EDGE OF PAVEMENT TO CENTER OF UPLIGHTS.

SEE LANDSCAPE JOINT LAYOUT PLAN, SHT. L6.02BFOR LAYOUT OF TREE PITS, TYP.

BEGIN ARC W/ TANGENT POINT INTERSECTION

BEGIN ARC WITH TANGENT POINT INTERSECTION

INSTALL SIGN ON VERTICAL FACE OF SEATWALL. CENTER AT END OF SEATWALL

SEE SHT. L6.02B FOR LAYOUT OF ART COUNTER

INSTALL SIGN ON VERTICAL FACE OF SEATWALL, CENTER ON BENCH SEGMENT.

NOTE: SHADED AREA REPRESENTS LOCATION OF FOUNDATION HAUNCH. -SSD FOR HAUNCH

BEGIN ARC W/ TANGENT POINT OF INTERSECTION

BEGIN ARC W/ TANGENT POINT OF INTERSECTION

CONFIRM LAYOUT OF UPLIGHTS W/ L.A. IN THE FIELD

NOTES:

1) ARCS SHALL BE SMOOTH AND CONTINUOUS BETWEEN POINTS ON LAYOUT PLAN.

2) SEE SHT. L602B FOR PAVEMENT JOINT LAYOUT.

3) REFER TO SHEET L0.00 FOR LEGEND.

4) REFER TO A1.30 FOR SITE SIGNAGE AND LANDSCAPE LAYOUT PLANS FOR LOCATIONS OF SIGNAGE.

2 - GINKGO PLANTER LAYOUT
SCALE: 1" = 10'

1 - PLAZA LAYOUT BLOWUP - WEST
SCALE: 1" = 10'

0 5 10 20 FEET

N

RFI-306

Meyer + Silberberg
RFI: 307 Response
Ref. L6.02
6/18/07

Reply to RFI-237

2 - GINKGO PLANTER LAYOUT

Copy sent by e-mail to: R. E. Maher

Ralph Larsen & Son, Inc.
General Contractors License No. 185341
300 8th Avenue
San Mateo, CA 94401-4221
Phone: (650) 579-0339
Fax: (650) 579-0349

Request for Information 237

Detailed, RFIs Grouped by RFI Number

Subject: Discipline: Category:
Long seat walls will crack

Cc: Company Name | Contact Name | Copies | Notes

Date Required: 1/29/2007

Question
See the attached sketch.
We are concerned, these walls will crack when they shrink. We think you need to have a method to control the shrinkage cracks.
1. Do you want us to install double chamfer strips to control crack locations?
2. If double chaffer is not use to control cracking how do you want to control location of shrinkage cracks?

Suggestion

Answer

Date Answered:

Proposal by Contractor is acceptable.
Chamfer strips should align and butt together cleanly at joints and be radially laid out, perpendicular to outside radii, and equally laid out as noted on Contractor's Drawing.

David Meyer/Meyer+Silberberg
01/17/07

APPROVAL STAMP
IDENTIFICATION STAMP
DIVISION OF THE STATE ARCHITECT
APP. 02- 107417
FLS SS
DATE: 12/21/06

NO.	ISSUED FOR	DATE
1	DSA APPROVAL SET	12/08/05

REGISTERED LANDSCAPE ARCHITECT
DAVID MEYER - No. 2342
Signature 12.16.05 Date
STATE OF CALIFORNIA

K M D
KAPLAN McLAUGHLIN DIAZ
ARCHITECTURE PLANNING
222 VALLEJO SAN FRANCISCO, CA 94111
(415) 398-5191 FAX (415) 394-7158

MEYER + SILBERBERG
LAND ARCHITECTS
1443 Cornell Ave Berkeley CA 94702
tel 510 559 2973 fax 510 898 0488
www.meyersilberberg.com

SOLANO COMMUNITY COLLEGE

SCCD
VALLEJO CENTER
Contract # A003.6123.01.V1

PROJECT NO.	DATE
419-201	12-08-05

LANDSCAPE
LAYOUT - WEST
BLOW UP PLANS
AS BUILTS

L6.02

PLOT DATE:

COPYRIGHT © 2004 BY KMD (KAPLAN McLAUGHLIN DIAZ). ALL RIGHTS RESERVED.

PATH: G:\000\000-000\ACAD\SHEETS\

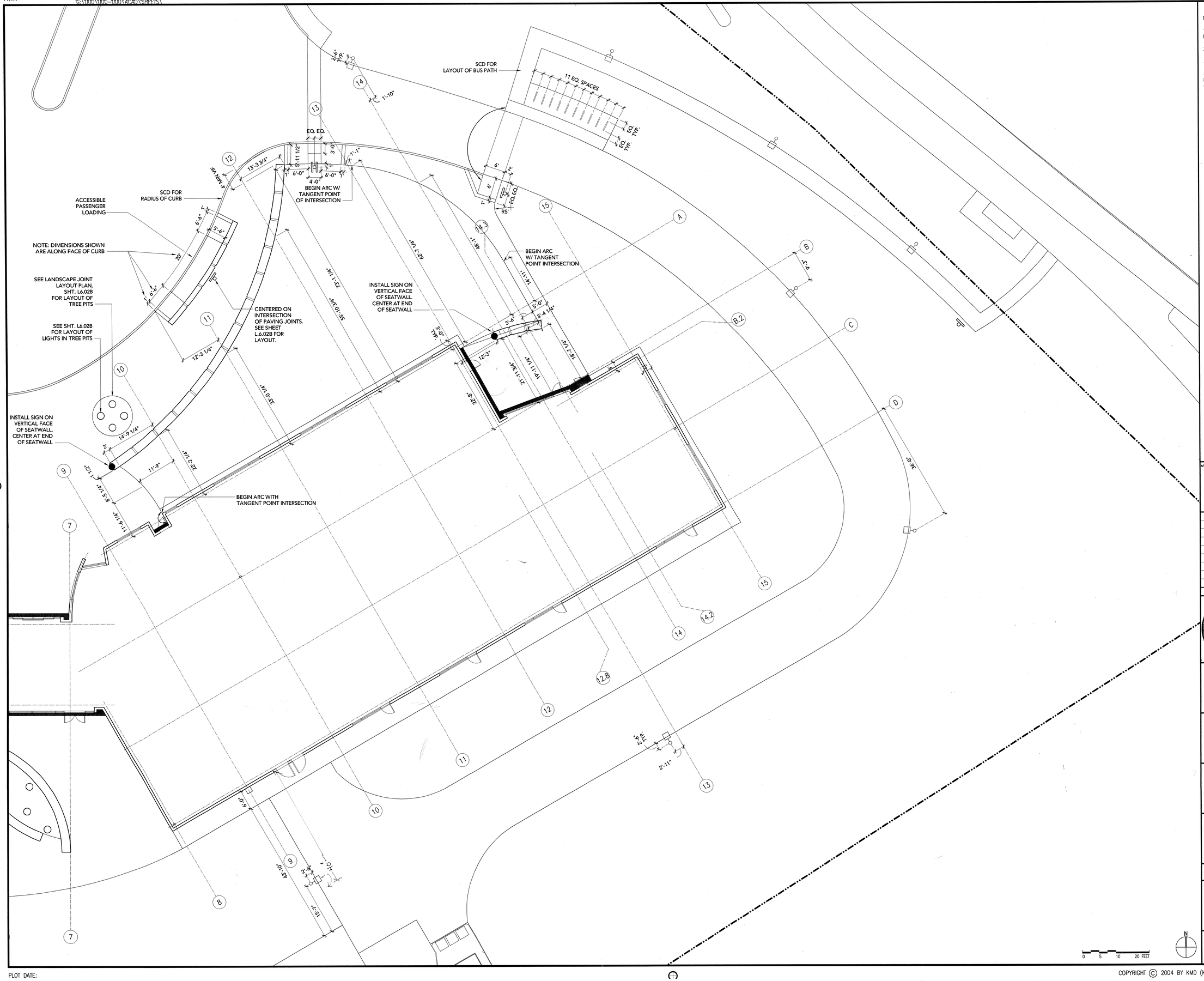

NOTES:

1) ARCS SHALL BE SMOOTH AND CONTINUOUS BETWEEN POINTS ON LAYOUT PLAN.

2) SEE SHT. L6.02B FOR PAVEMENT JOINT LAYOUT.

3) REFER TO SHEET L0.00 FOR LEGEND.

4) REFER TO A1.30 FOR SITE SIGNAGE AND LANDSCAPE LAYOUT PLANS FOR LOCATIONS OF SIGNAGE.

APPROVAL STAMP

IDENTIFICATION STAMP
DIVISION OF THE STATE ARCHITECT
APPL 02- 107417
AC FLS TH SS AL
DATE: 12/21/05

NO.	ISSUED FOR	DATE
1	DSA APPROVAL SET	12/08/05

REGISTERED LANDSCAPE ARCHITECT
DAVID MEYER – No. 2565
Signature
12/08/05
Date
STATE OF CALIFORNIA

K M D
KAPLAN McLAUGHLIN DIAZ
ARCHITECTURE PLANNING
222 VALLEJO SAN FRANCISCO, CA 94111
(415) 398-5191 FAX (415) 394-7158

MEYER + SILBERBERG
LAND ARCHITECTS
1443 Cornell Ave Berkeley CA 94702
tel 510 559 2973 fax 510 898 0488
www.meyersilberberg.com

Randi Randi

SOLANO
COMMUNITY COLLEGE

SCCD
VALLEJO CENTER
Contract # A003.6123.01.V1

PROJECT NO.	DATE
419-201	12-08-05

LANDSCAPE LAYOUT - EAST
BLOWUP PLAN
AS BUILTS

L6.02A

PLOT DATE:

COPYRIGHT © 2004 BY KMD (KAPLAN McLAUGHLIN DIAZ). ALL RIGHTS RESERVED.

PATH: G:\000\000-000\ACAD\SHEETS\

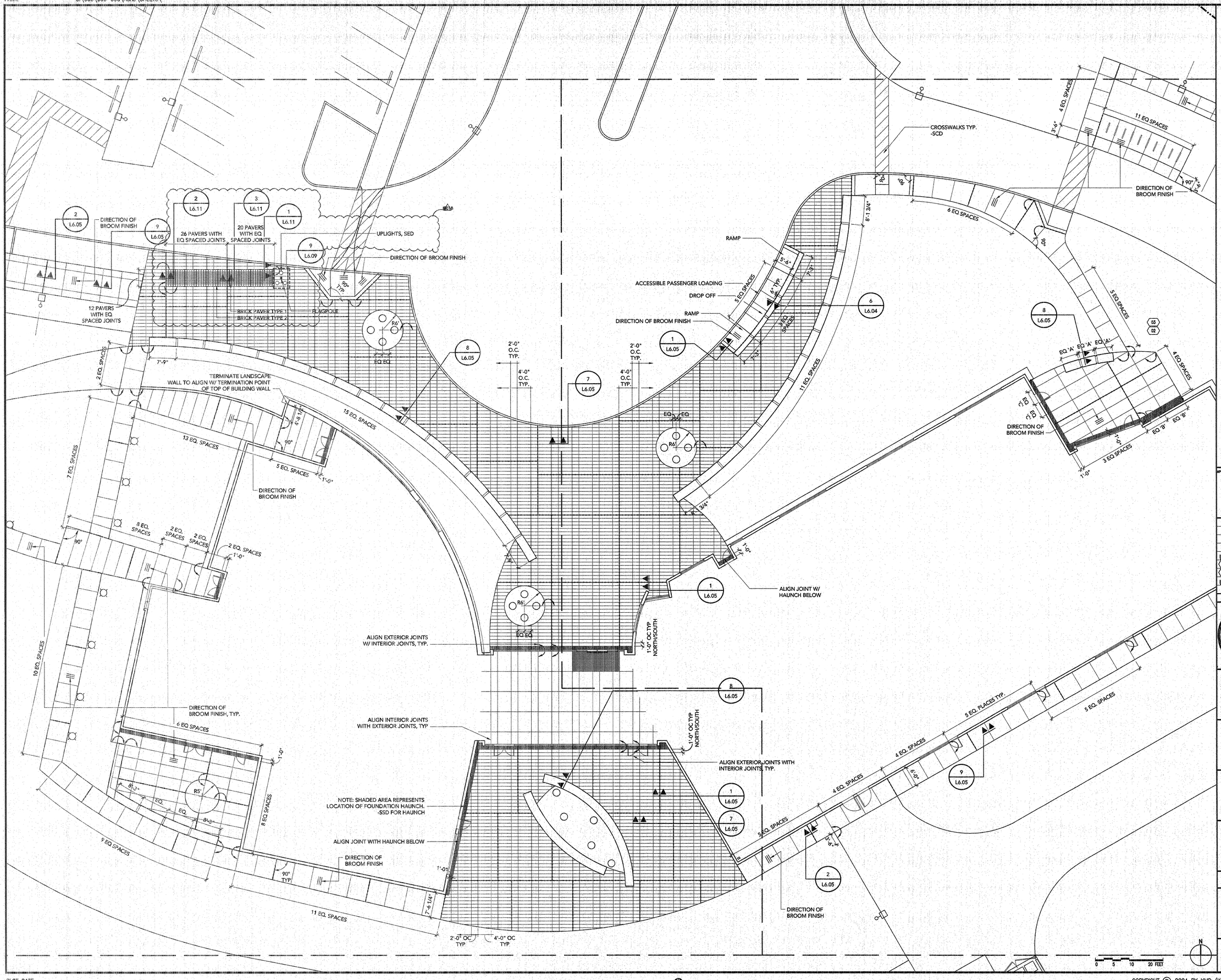

NOTES:

1) REFER TO SHEET L0.00 FOR LEGEND.

2) REFER TO A1.30 FOR SITE SIGNAGE AND LANDSCAPE LAYOUT PLANS FOR LOCATIONS OF SIGNAGE.

FOR PURPOSES OF BIDDING, CONTRACTOR TO ASSUME THAT ALL CONSTRUCTION WITHIN THE LIMIT OF WORK WILL BE CONCURRENT WITH CONSTRUCTION BY THE CITY OF VALLEJO OF PART OR ALL OF THE COLUMBUS PARKWAY IMPROVEMENTS SHOWN OUTSIDE THE LIMITS OF WORK.

APPROVAL STAMP

IDENTIFICATION STAMP
DIVISION OF THE STATE ARCHITECT
APPL 02- 107417
AC ____ FLS ____ SS ____
DATE: ____

NO.	ISSUED FOR	DATE
18	INFORMATION BULLETIN #18	06/18/07
03	FIELD ORDER #3	03/21/07
02	FIELD ORDER #2	03/19/07
12	INFORMATION BULLETIN #12	02/27/07
1	DSA APPROVAL SET	12/08/05

REGISTERED LANDSCAPE ARCHITECT
DAVID MEYER - No. 2565
Signature
6/18/07
Date
STATE OF CALIFORNIA

K M D
KAPLAN McLAUGHLIN DIAZ
ARCHITECTURE PLANNING
222 VALLEJO SAN FRANCISCO, CA 94111
(415) 398-5191 FAX (415) 394-7158

MEYER + SILBERBERG LAND ARCHITECTS
1443 Cornell Ave Berkeley CA 94702
tel 510 559 2973 fax 510 898 0488
www.meyersilberberg.com

SOLANO COMMUNITY COLLEGE

SCCD
VALLEJO CENTER
Contract # A003.6123.01.V1

PROJECT NO. 419-201
DATE 12-08-05

LANDSCAPE JOINT LAYOUT BLOW UP PLAN
AS BUILTS

L6.02B

PLOT DATE:

COPYRIGHT © 2004 BY KMD (KAPLAN McLAUGHLIN DIAZ). ALL RIGHTS RESERVED.

PATH: C:\000\000-000\ACAD\SHEETS\

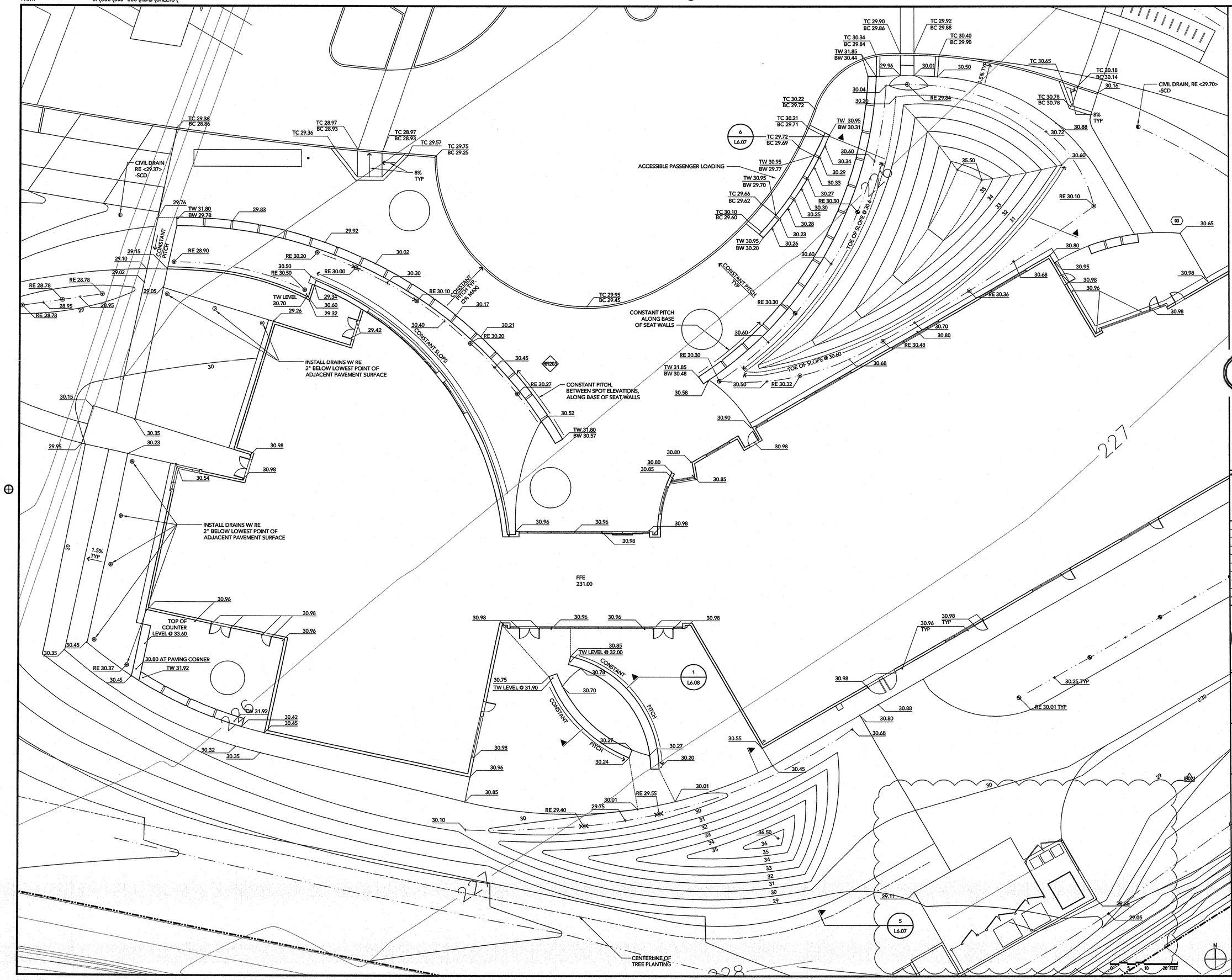

NOTES:

1) ALL ELEVATION NOTATIONS ARE ABBREVIATED FROM 2XX.XX TO XX.XX.

2) REFER TO SHEET L0.00 FOR LEGEND.

3) REFER TO A1.30 FOR SITE SIGNAGE AND LANDSCAPE LAYOUT PLANS FOR LOCATIONS OF SIGNAGE.

FILE COPY

FOR PURPOSES OF BIDDING, CONTRACTOR TO ASSUME THAT ALL CONSTRUCTION WITHIN THE LIMIT OF WORK WILL BE CONCURRENT WITH CONSTRUCTION BY THE CITY OF VALLEJO OF PART OR ALL OF THE COLUMBUS PARKWAY IMPROVEMENTS SHOWN OUTSIDE THE LIMITS OF WORK.

APPROVAL STAMP
IDENTIFICATION STAMP
DIVISION OF THE STATE ARCHITECT
APPL 02- 107417
AC ____ FLS ____ SS ____
DATE: ____

NO.	ISSUED FOR	DATE
RF203	INFORMATION BULLETIN #21	06/01/07
03	FIELD ORDER #3	03/20/07
RF203	RFI #203	12/04/07
1	DSA APPROVAL SET	12/08/05

REGISTERED LANDSCAPE ARCHITECT DAVID MEYER - No. 3542 STATE OF CALIFORNIA
Expiration Date 6/30/09

K M D
KAPLAN McLAUGHLIN DIAZ
ARCHITECTURE PLANNING
222 VALLEJO SAN FRANCISCO, CA 94111
(415) 398-5191 FAX (415) 394-7158

MEYER + SILBERBERG
1443 Cornell Ave Berkeley CA 94702
tel 510 559 2973 fax 510 898 0488
www.meyersilberberg.com

SOLANO COMMUNITY COLLEGE

SCCD
VALLEJO CENTER
Contract # A003.6123.01.V1

PROJECT NO. 419-201
DATE 12-08-05

LANDSCAPE GRADING BLOW UP PLAN

L6.03

PLOT DATE:

COPYRIGHT © 2004 BY KMD (KAPLAN McLAUGHLIN DIAZ). ALL RIGHTS RESERVED.

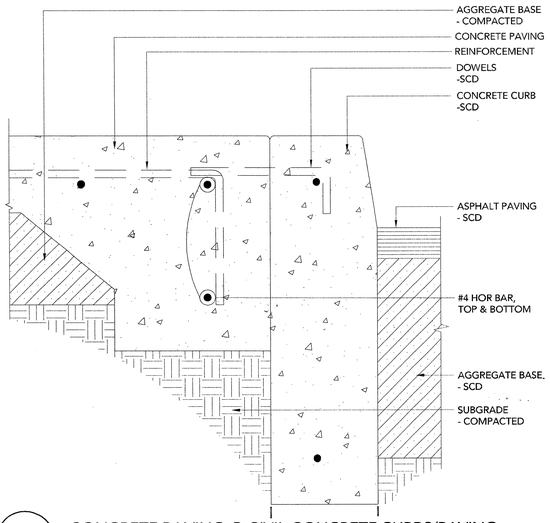

9 / - CONCRETE PAVING @ CIVIL CONCRETE CURBS/PAVING

SCALE: 0 6" 1" Typical Section

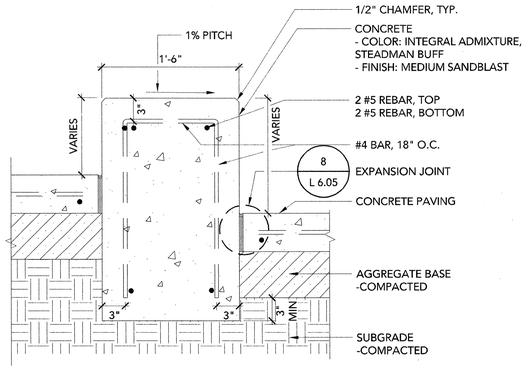

6 / - WARNING CURB AT DROP OFF

SCALE: Typical Section

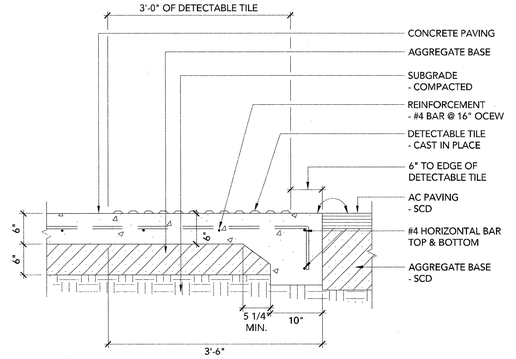

3 / - DETECTABLE TILE @ FLUSH PAVING

SCALE: 0 6" 1" 1'-6" 2' Typical Section

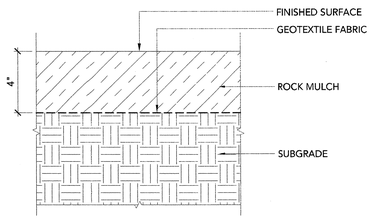

8 / - ROCK MULCH

SCALE: 0 6" 1" Typical Section

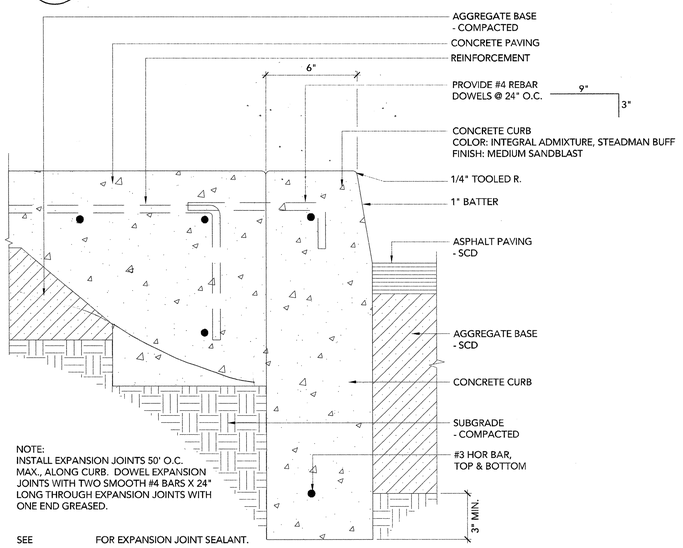

5 / - CONCRETE PAVING @ CONCRETE CURB/AC PAVING

SCALE: 0 6" 1" Typical Section

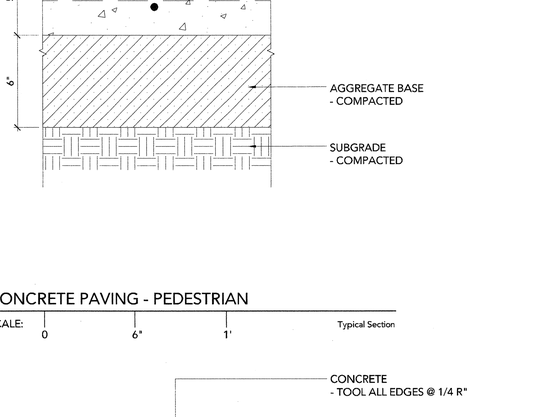

2 / - CONCRETE PAVING - PEDESTRIAN

SCALE: 0 6" 1" Typical Section

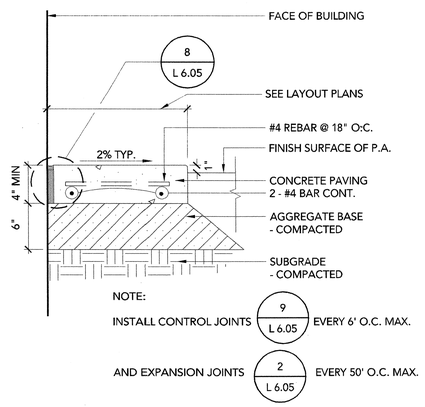

7 / - CONCRETE MOWBAND

SCALE: 0 6" 1" 1'-6" 2' Typical Section

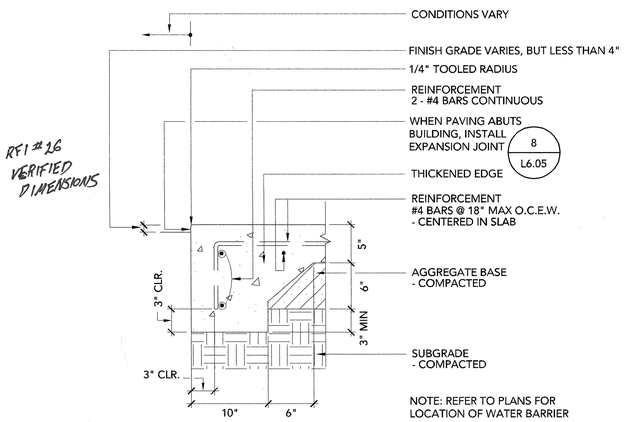

RFI #26
VERIFIED
DIMENSIONS

4 / - THICKENED EDGE AT CONCRETE PAVING

SCALE: 0 6" 1" 1'-6" 2' Typical Section

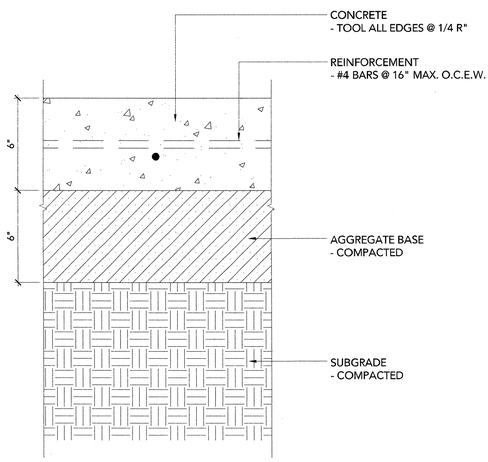

1 / - CONCRETE PAVING - VEHICULAR

SCALE: 0 6" 1" Typical Section

APPROVAL STAMP
IDENTIFICATION STAMP
DIVISION OF THE STATE ARCHITECT
APP. NO. 107417
AC FLS SS
DATE: 12/21/05

NO.	ISSUED FOR	DATE
1	DSA APPROVAL SET	12/08/05

REGISTERED LANDSCAPE ARCHITECT
RONALD MEYER – No. 4564
Signature
12/08/05
Date
STATE OF CALIFORNIA

K M D
KAPLAN McLAUGHLIN DIAZ
ARCHITECTURE PLANNING
222 VALLEJO SAN FRANCISCO, CA 94111
(415) 398-5191 FAX (415) 394-7158

MEYER + SILBERBERG
LAND ARCHITECTS
1443 Cornell Ave Berkeley CA 94702
tel 510 559 2973 fax 510 898 0488
www.meyersilberberg.com

SOLANO COMMUNITY COLLEGE

SCCD
VALLEJO CENTER
Contract # A003.6123.01.V1

PROJECT NO. 419-201
DATE 12-08-05

LANDSCAPE DETAILS

AS BUILTS

L6.04

COPYRIGHT © 2004 BY KMD (KAPLAN McLAUGHLIN DIAZ). ALL RIGHTS RESERVED.

PATH: G:\000\000-000\ACAD\SHEETS\

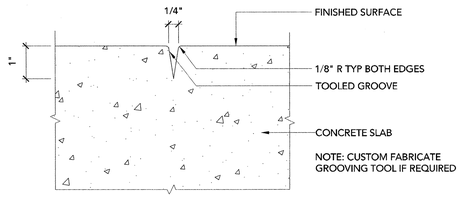

9 / - TOOLED CONTROL JOINT AT CONCRETE TYPE 2 & 3

SCALE: NOT TO SCALE — Typical Section

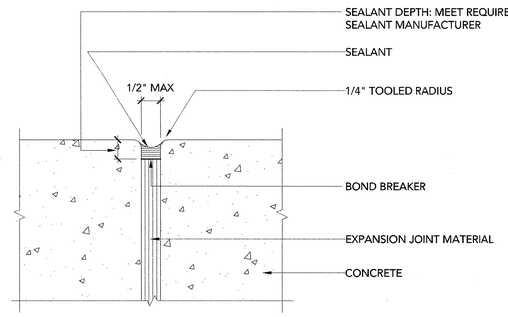

6 / - SEALANT AT CONCRETE TYPE 2 EXPANSION JOINT

SCALE: NOT TO SCALE — Typical Section

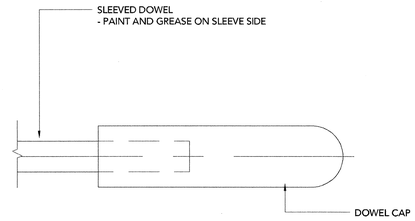

3 / - DOWEL SLEEVE

SCALE: NOT TO SCALE — Typical Section

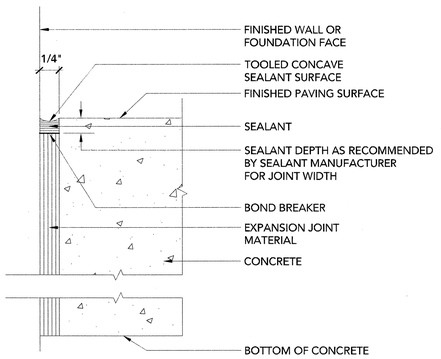

8 / - PAVING EXPANSION JOINT AT WALL

SCALE: NOT TO SCALE — Typical Section

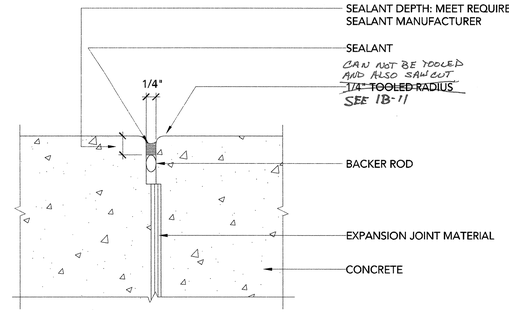

5 / - SEALANT AT CONCRETE TYPE 1 EXPANSION JOINT

SCALE: NOT TO SCALE — Typical Section

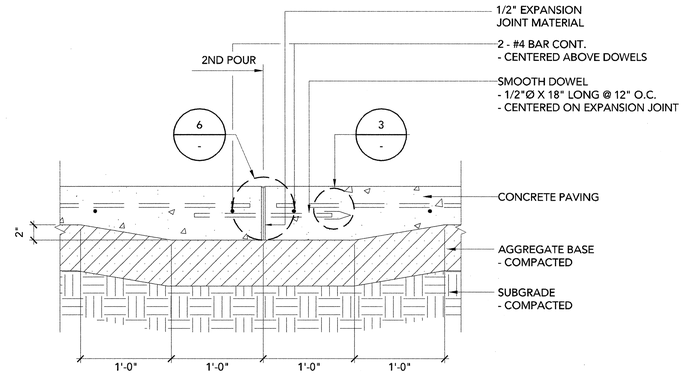

2 / - DOWELED EXPANSION JOINT @ CONCRETE - TYPE 2

SCALE: 0 6" 1' 1'-6" 2' — Typical Section

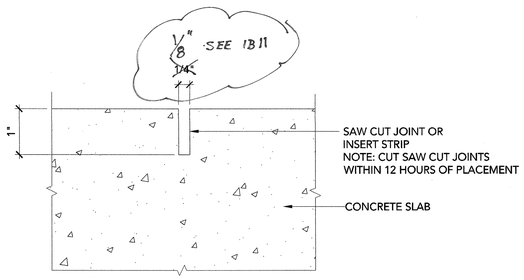

7 / - CONTROL JOINT @ CONCRETE - TYPE 1

SCALE: NOT TO SCALE — Typical Section

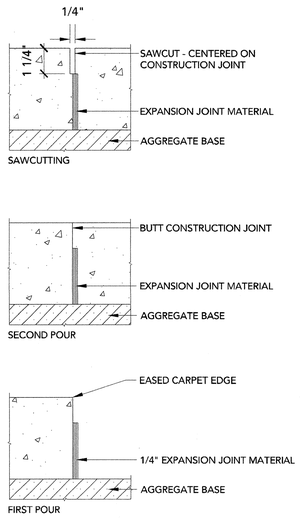

4 / - SAWCUT EXPANSION JOINT @ CONCRETE - TYPE 1

SCALE: NOT TO SCALE — Typical Section

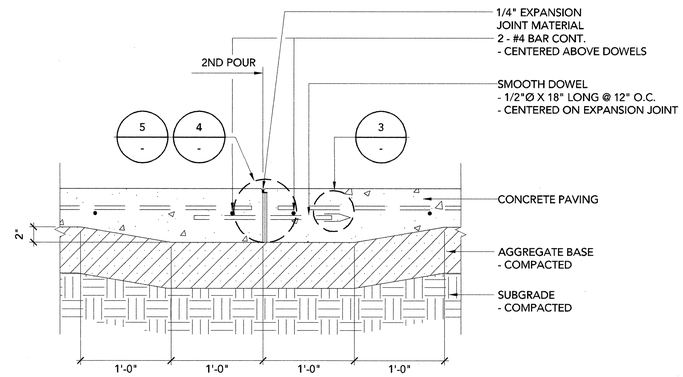

1 / - DOWELED EXPANSION JOINT @ CONCRETE -- TYPE 1

SCALE: 0 6" 1' 1'-6" 2' — Typical Section

APPROVAL STAMP
IDENTIFICATION STAMP
DIVISION OF THE STATE ARCHITECT
APPL 02- 107417
AC FLS SS
DATE: 12/21/05

NO.	ISSUED FOR	DATE
1	DSA APPROVAL SET	12/08/05

REGISTERED LANDSCAPE ARCHITECT
DAVID MEYER — No. 4580
Signature
12/09/05
Date
STATE OF CALIFORNIA

K M D
KAPLAN McLAUGHLIN DIAZ
ARCHITECTURE PLANNING
222 VALLEJO SAN FRANCISCO, CA 94111
(415) 398-5191 FAX (415) 394-7158

MEYER + SILBERBERG
LAND ARCHITECTS
1443 Cornell Ave Berkeley CA 94702
tel 510 559 2973 fax 510 898 0488
www.meyersilberberg.com

SOLANO COMMUNITY COLLEGE

SCCD
VALLEJO CENTER
Contract # A003.6123.01.V1

PROJECT NO. 419-201
DATE 12-08-05

LANDSCAPE DETAILS
AS BUILTS

L6.05

PLOT DATE:

COPYRIGHT © 2004 BY KMD (KAPLAN McLAUGHLIN DIAZ). ALL RIGHTS RESERVED.

PATH: G:\000\000-000\ACAD\SHEETS\

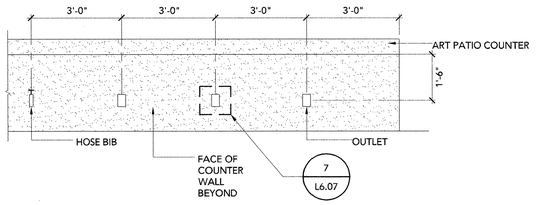

9 - OUTLETS & HOSE BIB @ ART PATIO COUNTER
SCALE: 0 1' 2' 3' 4' Elevation

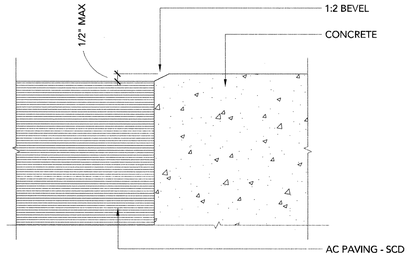

6 - BEVELED LIP AT CURB RAMP
SCALE: 0 6" 1' Typical Section

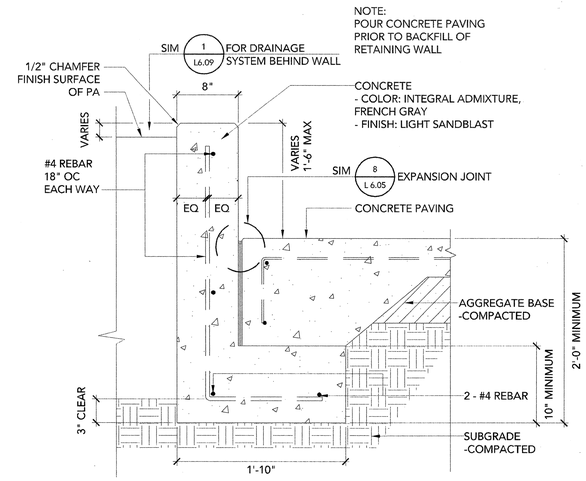

3 - CONCRETE RETAINING WALL
SCALE: 0 6" 1' 1'-6" 2' Typical Section

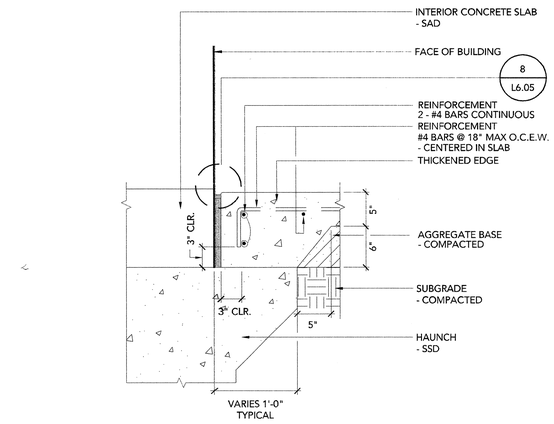

8 - PAVING AT HAUNCH
SCALE: NOT TO SCALE Typical Section

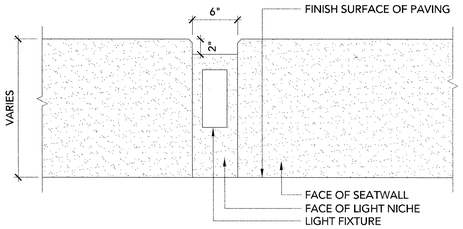

5 - SEAT WALL LIGHT NICHE
SCALE: 0 6" 1' 1'-6" 2' Typical Elevation

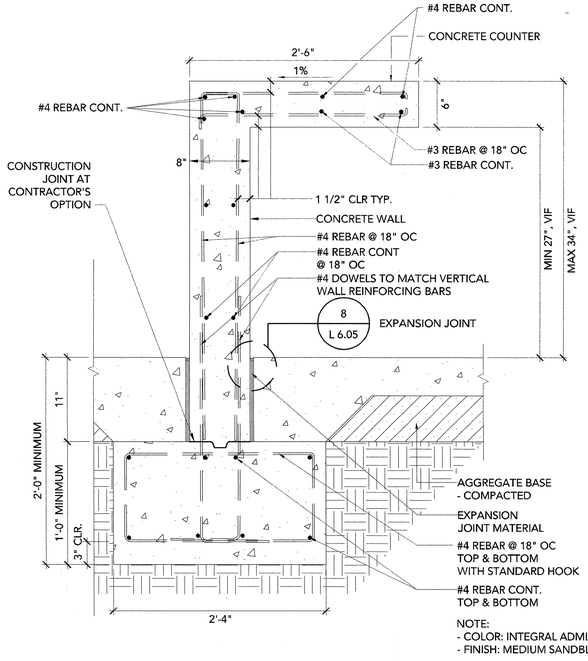

4 - ART PATIO COUNTER
SCALE: 0 6" 1' 1'-6" 2' Typical Section

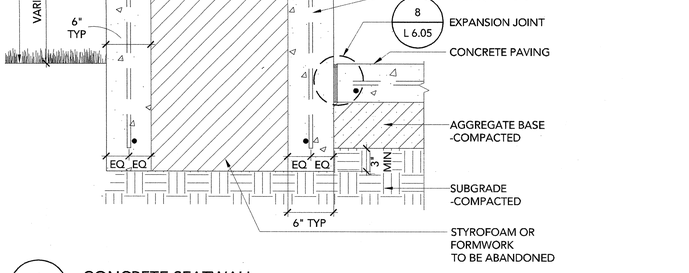

2 - CONCRETE SEATWALL @ NICHE
SCALE: 0 6" 1' 1'-6" 2' Typical Section

1 - CONCRETE SEATWALL
SCALE: 0 6" 1' 1'-6" 2' Typical Section

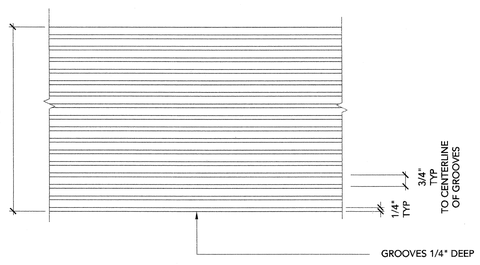

7 - GROOVED BORDER AT RAMP
SCALE: 0 6" 1' Typical Plan

APPROVAL STAMP
IDENTIFICATION STAMP
DIVISION OF THE STATE ARCHITECT
APPL 02- 107417
AC FLS SS
DATE: 12/21/05

NO.	ISSUED FOR	DATE
1	DSA APPROVAL SET	12/08/05

REGISTERED LANDSCAPE ARCHITECT DAVID MEYER No. 2346 Signature 12/08/05 Date STATE OF CALIFORNIA

K M D
KAPLAN McLAUGHLIN DIAZ
ARCHITECTURE PLANNING
222 VALLEJO SAN FRANCISCO, CA 94111
(415) 398-5191 FAX (415) 394-7158

MEYER + SILBERBERG LAND ARCHITECTS
1443 Cornell Ave Berkeley CA 94702
tel 510 559 2973 fax 510 898 0488
www.meyersilberberg.com

SOLANO COMMUNITY COLLEGE

SCCD
VALLEJO CENTER
Contract # A003.6123.01.V1

PROJECT NO.	DATE
419-201	12-08-05

LANDSCAPE DETAILS

AS BUILTS

L6.06

PLOT DATE:

COPYRIGHT © 2004 BY KMD (KAPLAN McLAUGHLIN DIAZ). ALL RIGHTS RESERVED.

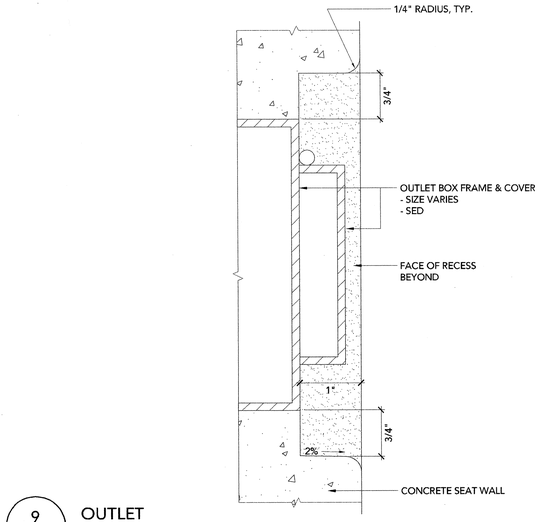

9 - OUTLET
SCALE: 0 1" 2" Section

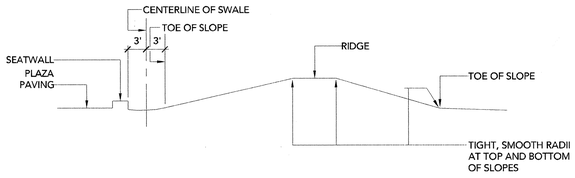

6 - NORTH BERM GRADING
SCALE: 0 10' 20' Section

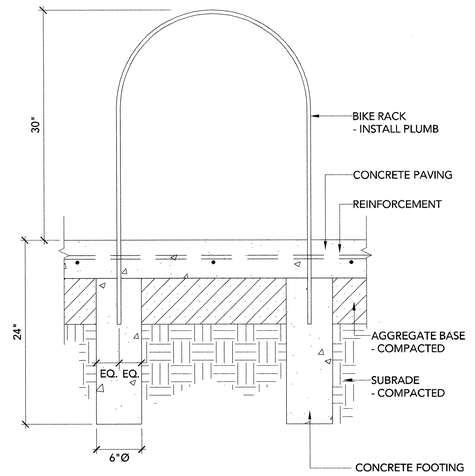

3 - BIKE RACK
SCALE: 0 6" 1' 1'-6" 2' Detail

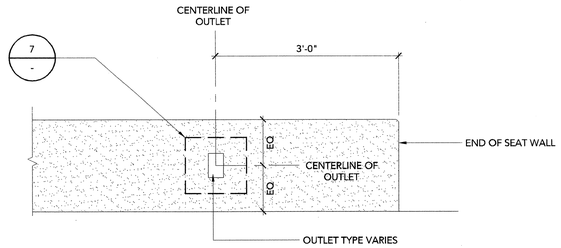

8 - OUTLET AT SEATWALL
SCALE: 0 6" 1' 1'-6" 2' Elevation

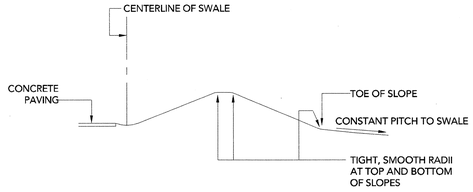

5 - SOUTH BERM GRADING
SCALE: 0 10' 20' Section

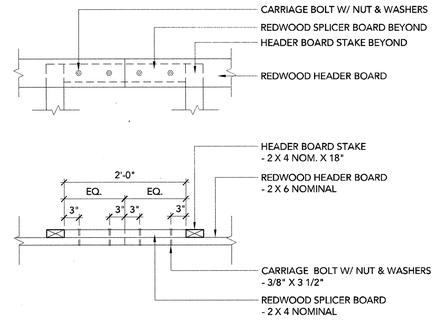

2 - SPLICE AT REDWOOD HEADER
SCALE: 0 6" 1' 1'-6" 2' Typical Section

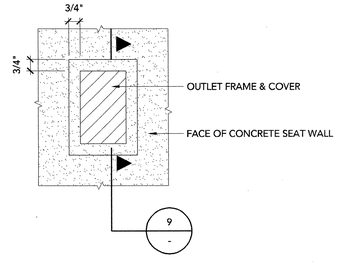

7 - OUTLET
SCALE: 0 6" 1' Typical Elevation

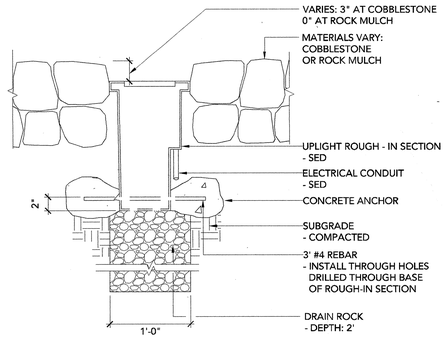

4 - UPLIGHT WITH CONCRETE ANCHOR
SCALE: 0 6" 1' 1'-6" 2' Typical Section

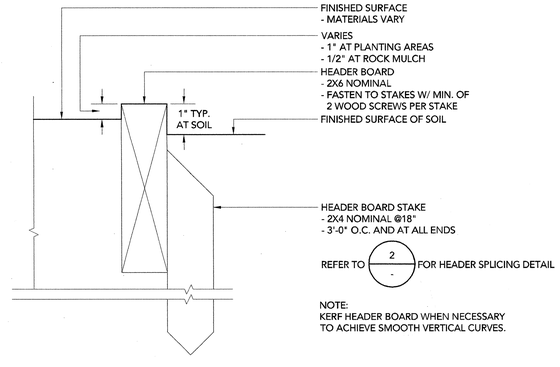

1 - REDWOOD HEADER
SCALE: NOT TO SCALE Typical Section

APPROVAL STAMP
IDENTIFICATION STAMP
DIVISION OF THE STATE ARCHITECT
APPL. 02- 107417
AC FLS TH SS DVL
DATE: 12/21/05

NO.	ISSUED FOR	DATE
1	DSA APPROVAL SET	12/08/05

REGISTERED LANDSCAPE ARCHITECT
DAVID MEYER – No. 2578
Signature
12/08/05
Date
STATE OF CALIFORNIA

K M D
KAPLAN McLAUGHLIN DIAZ
ARCHITECTURE PLANNING
222 VALLEJO SAN FRANCISCO, CA 94111
(415) 398-5191 FAX (415) 394-7158

MEYER + SILBERBERG
LAND ARCHITECTS
1443 Cornell Ave Berkeley CA 94702
tel 510 559 2973 fax 510 898 0488
www.meyersilberberg.com

SOLANO COMMUNITY COLLEGE

SCCD
VALLEJO CENTER
Contract # A003.6123.01.V1

PROJECT NO. 419-201
DATE 12-08-05

LANDSCAPE DETAILS
AS BUILTS

L6.07

PLOT DATE:
COPYRIGHT © 2004 BY KMD (KAPLAN McLAUGHLIN DIAZ). ALL RIGHTS RESERVED.

PATH: G:\000\000-000\ACAD\SHEETS\

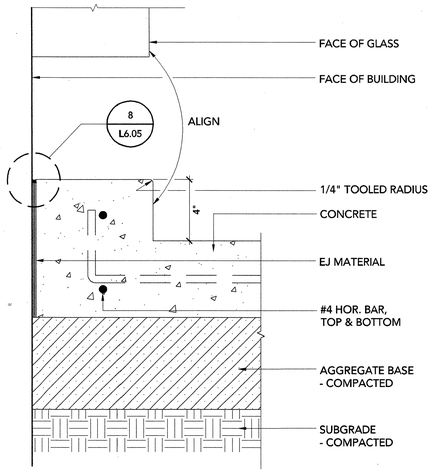

9 - INTEGRAL CONCRETE WARNING CURB

SCALE: Typical Section

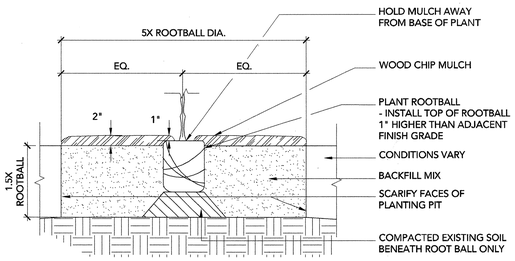

6 - SHRUB/GRASS PLANTING PIT

SCALE: 0 6" 1' 1'-6" 2' Typical Section

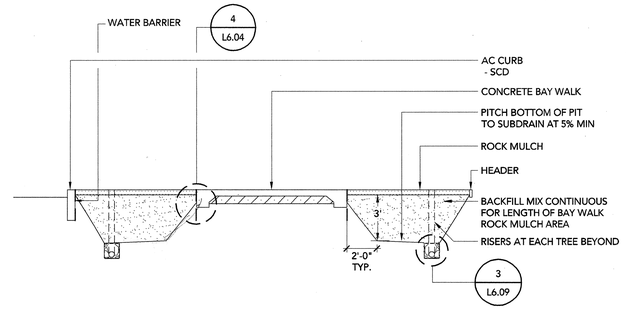

3 - BAY WALK

SCALE: 0 1' 5' 10' Typical Section

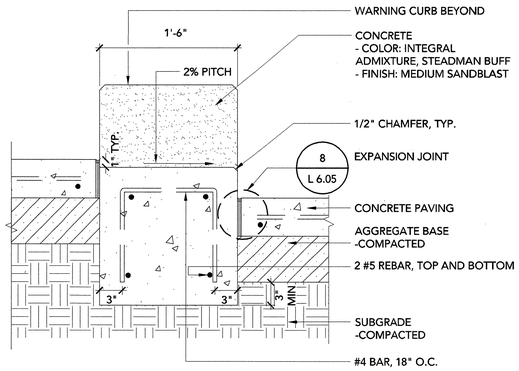

8 - WARNING CURB NICHE AT DROP-OFF

SCALE: 0 6" 1' 1'-6" 2' Typical Section

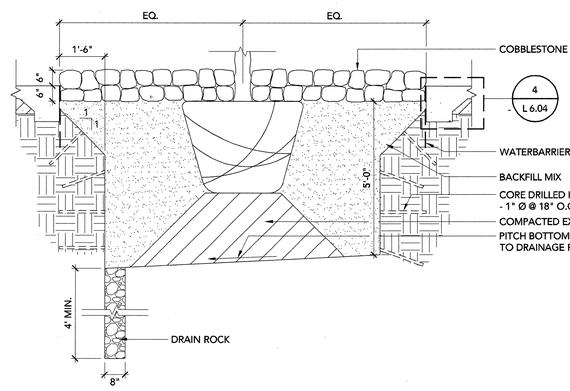

5 - TREE PLANTING PIT AT ENTRY PLAZA

SCALE: 0 1' 2' 3' 4' Typical Section

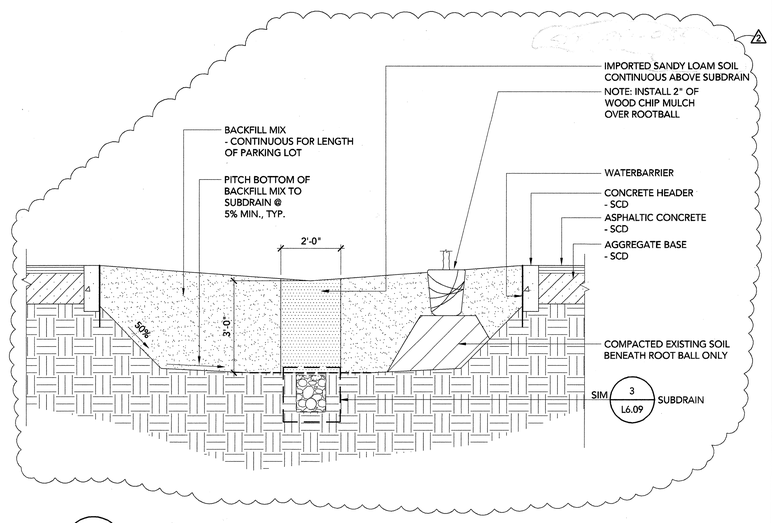

2 - BIOSWALE

SCALE: 0 1' 2' 3' 4' Typical Section

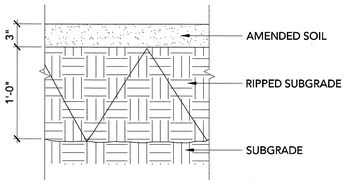

7 - AMENDED SOIL AT BIOSWALE/TURF/MEADOW/NATIVE LAWN

SCALE: 0 6" 1' 1'-6" 2' Typical Section

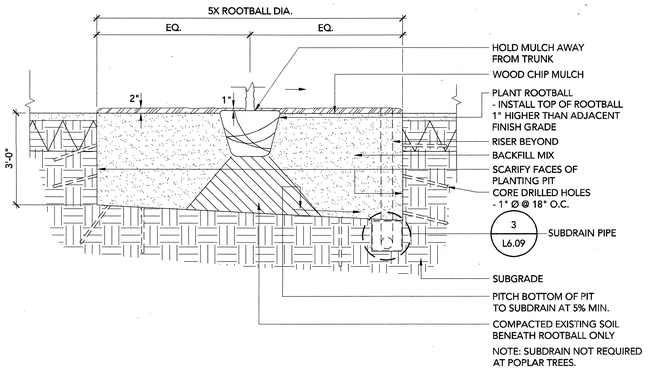

4 - TREE PLANTING PIT

SCALE: 0 1' 2' 3' 4' Typical Section

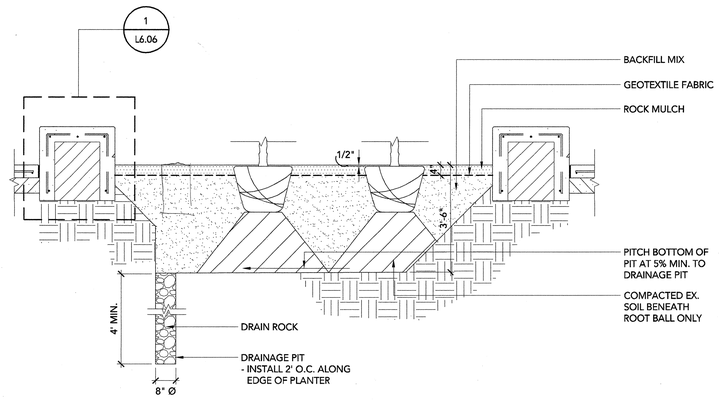

1 - GINKGO PLANTER

SCALE: 0 1' 2' 3' 4' Typical Section

FOR PURPOSES OF BIDDING, CONTRACTOR TO ASSUME THAT ALL CONSTRUCTION WITHIN THE LIMIT OF WORK WILL BE CONCURRENT WITH CONSTRUCTION BY THE CITY OF VALLEJO OF PART OR ALL OF THE COLUMBUS PARKWAY IMPROVEMENTS SHOWN OUTSIDE THE LIMITS OF WORK.

APPROVAL STAMP

IDENTIFICATION STAMP
DIVISION OF THE STATE ARCHITECT
APPL 02- 107417
AC _____ FLS _____ SS _____
DATE: _____

NO.	ISSUED FOR	DATE
2	ADDENDUM #2	02/21/06
1	DSA APPROVAL SET	12/08/05

REGISTERED LANDSCAPE ARCHITECT
DAVID MEYER – NO. 2549
Signature
Date
STATE OF CALIFORNIA

K M D
KAPLAN McLAUGHLIN DIAZ
ARCHITECTURE PLANNING
222 VALLEJO SAN FRANCISCO, CA 94111
(415) 398-5191 FAX (415) 394-7158

MEYER + SILBERBERG LAND ARCHITECTS
1443 Cornell Ave Berkeley CA 94702
tel 510 559 2973 fax 510 898 0488
www.meyersilberberg.com

SOLANO COMMUNITY COLLEGE

SCCD
VALLEJO CENTER
Contract # A003.6123.01.V1

PROJECT NO. 419-201
DATE 12-08-05

LANDSCAPE DETAILS

AS BUILTS

L6.08

PLOT DATE:

COPYRIGHT © 2004 BY KMD (KAPLAN McLAUGHLIN DIAZ). ALL RIGHTS RESERVED.

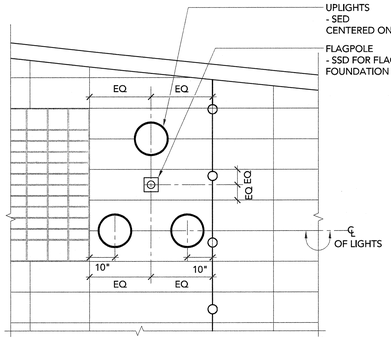

9 - FLAGPOLE AND UPLIGHT LAYOUT

SCALE: 0 1' 2' 3' 4' Typical Section

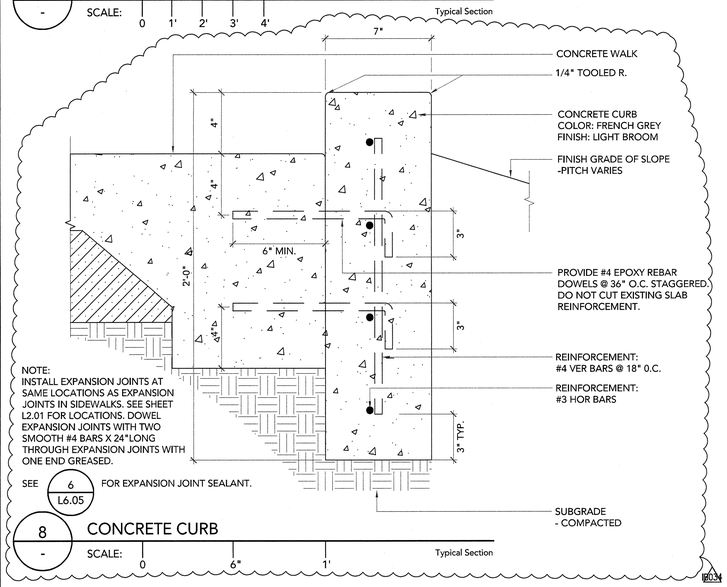

8 - CONCRETE CURB

SCALE: 0 6" 1' Typical Section

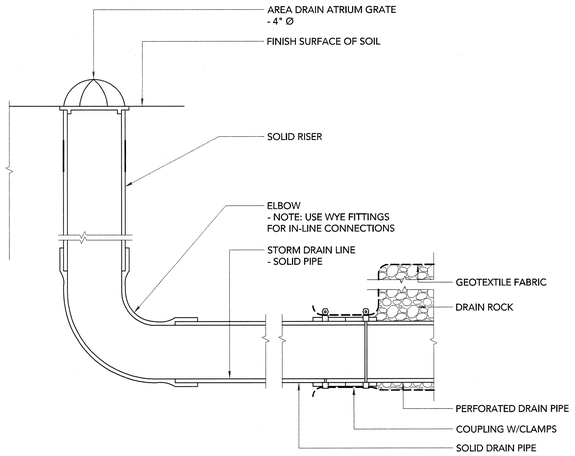

6 - CLEANOUT AT SUBDRAIN LINE

SCALE: NOT TO SCALE Typical Section

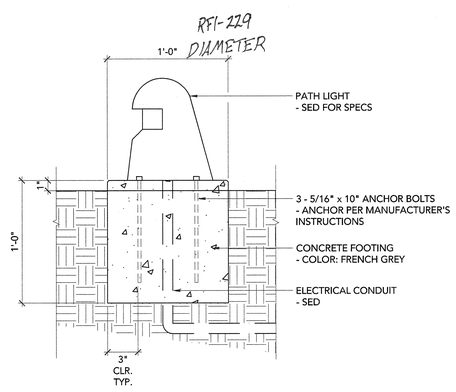

5 - PATH LIGHT

SCALE: NOT TO SCALE Typical Section

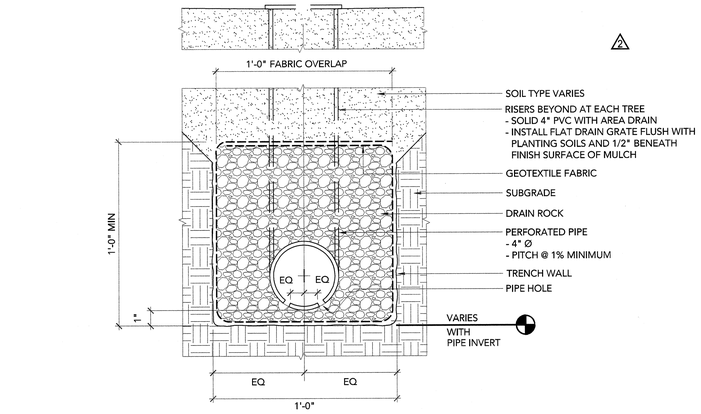

3 - SUBDRAIN AT TREE PITS

SCALE: 0 6" 1' Typical Section

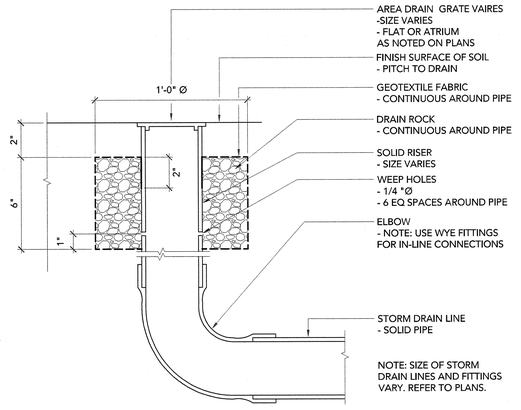

2 - AREA DRAIN AT TURF

SCALE: NOT TO SCALE Typical Section

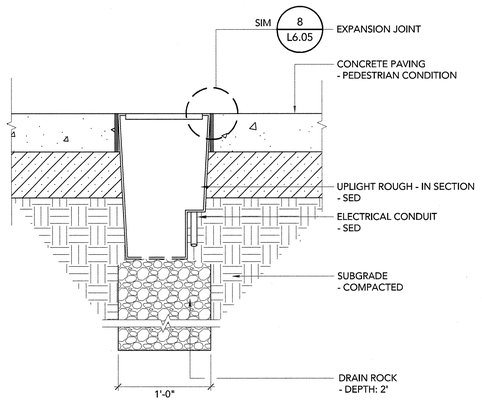

7 - UPLIGHT IN CONCRETE PAVING

SCALE: 0 6" 1' 1'-6" 2' Typical Section

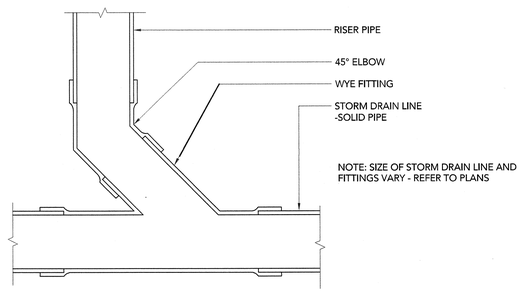

4 - WYE FITTING

SCALE: NOT TO SCALE Typical Section

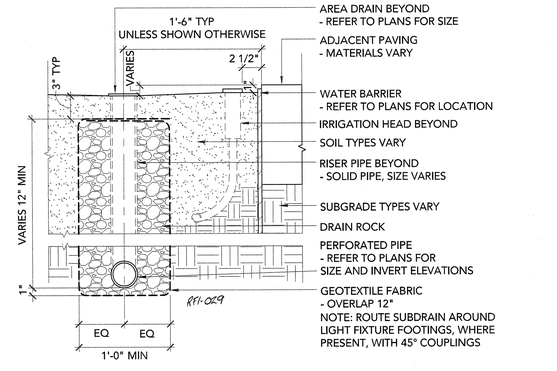

1 - PERFORATED SUBDRAINAGE

SCALE: 0 6" 1' 1'-6" 2' Typical Section

FOR PURPOSES OF BIDDING, CONTRACTOR TO ASSUME THAT ALL CONSTRUCTION WITHIN THE LIMIT OF WORK WILL BE CONCURRENT WITH CONSTRUCTION BY THE CITY OF VALLEJO OF PART OR ALL OF THE COLUMBUS PARKWAY IMPROVEMENTS SHOWN OUTSIDE THE LIMITS OF WORK.

APPROVAL STAMP
IDENTIFICATION STAMP
DIVISION OF THE STATE ARCHITECT
APPL 02- 107417
AC ____ FLS ____ SS ____
DATE: ____

NO.	ISSUED FOR	DATE
IB034	INFORMATION BULLETIN #34	07/18/07
IB018	INFORMATION BULLETIN #18	06/18/07
2	ADDENDUM #2	02/21/06
1	DSA APPROVAL SET	12/08/05

REGISTERED LANDSCAPE ARCHITECT
DAVID MEYER - No 2350
Signature
Date
STATE OF CALIFORNIA

K M D
KAPLAN McLAUGHLIN DIAZ
ARCHITECTURE PLANNING
222 VALLEJO SAN FRANCISCO, CA 94111
(415) 398-5191 FAX (415) 394-7158

MEYER + SILBERBERG
LAND ARCHITECTS
1443 Cornell Ave Berkeley CA 94702
tel 510 559 2973 fax 510 898 0488
www.meyersilberberg.com

SOLANO COMMUNITY COLLEGE

SCCD
VALLEJO CENTER
Contract # A003.6123.01.V1

PROJECT NO.	DATE
419-201	12-08-05

LANDSCAPE DETAILS

L6.09

COPYRIGHT © 2004 BY KMD (KAPLAN McLAUGHLIN DIAZ). ALL RIGHTS RESERVED.

PATH: G:\000\000-000\ACAD\SHEETS\

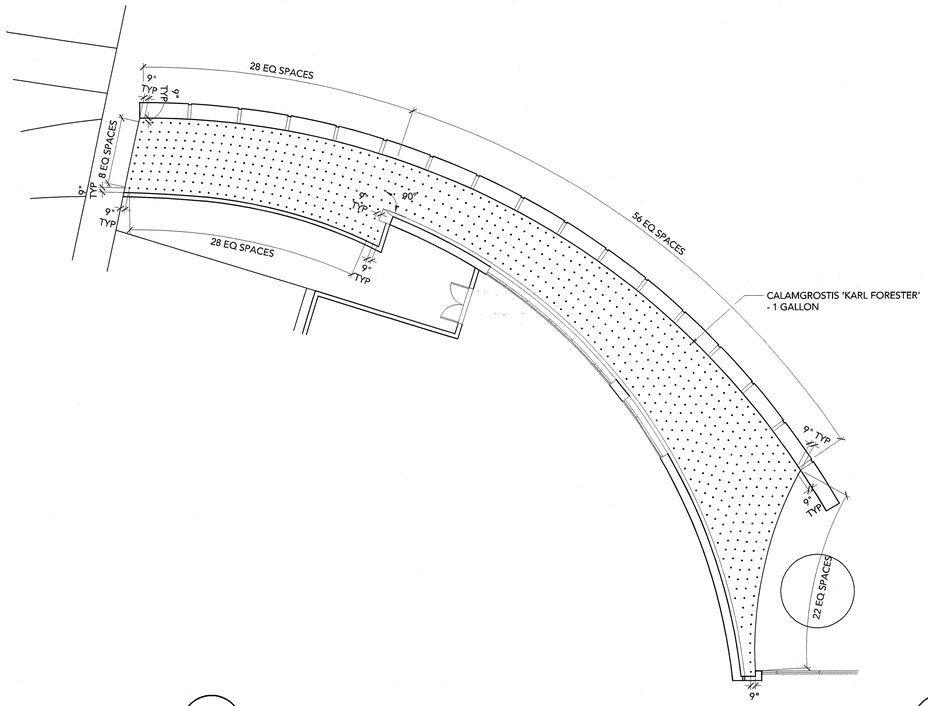

5 / - NEW DETAIL

SCALE: Plan

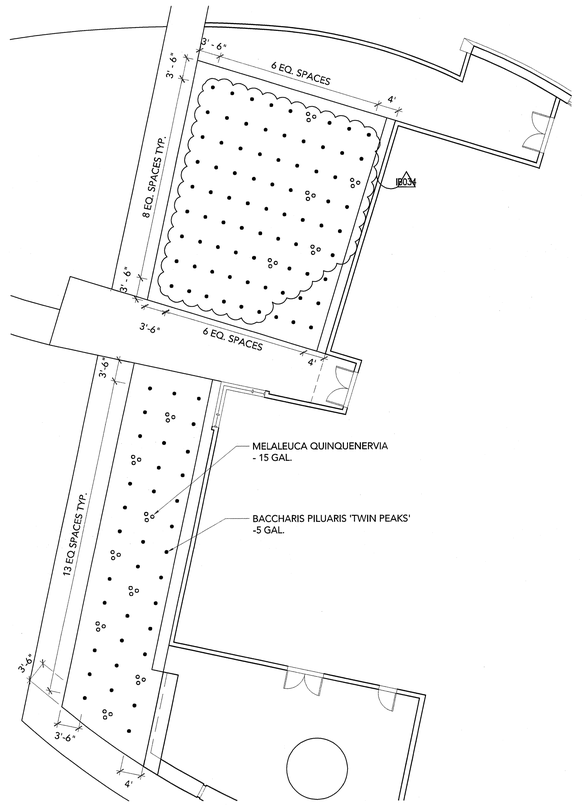

3 / - GRASS LAYOUT AT SEATWALL

SCALE: 0 10' 20' Plan

2 / - PLANT LAYOUT AT AUDITORIUM EXIT

SCALE: 0 10' 20' Plan

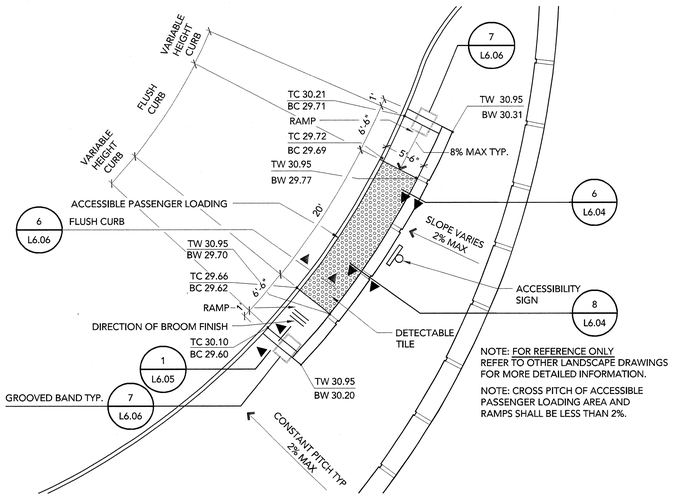

NOTE: FOR REFERENCE ONLY
REFER TO OTHER LANDSCAPE DRAWINGS FOR MORE DETAILED INFORMATION.

NOTE: CROSS PITCH OF ACCESSIBLE PASSENGER LOADING AREA AND RAMPS SHALL BE LESS THAN 2%.

4 / - ACCESSIBLE PASSENGER LOADING

SCALE: 0 1' 5' 10' Plan

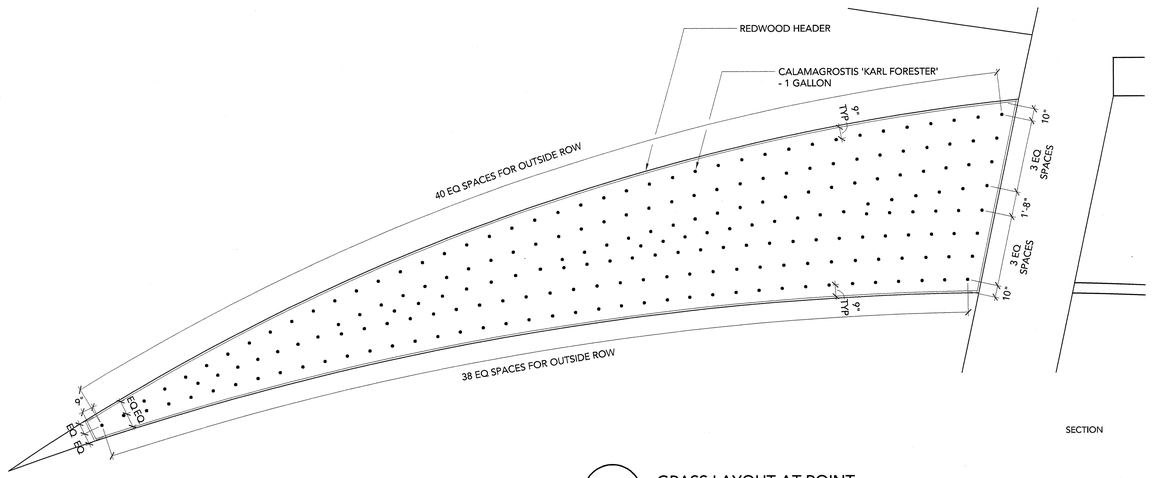

1 / - GRASS LAYOUT AT POINT

SCALE: 0 1' 5' 10' Plan

FOR PURPOSES OF BIDDING, CONTRACTOR TO ASSUME THAT ALL CONSTRUCTION WITHIN THE LIMIT OF WORK WILL BE CONCURRENT WITH CONSTRUCTION BY THE CITY OF VALLEJO OF PART OR ALL OF THE COLUMBUS PARKWAY IMPROVEMENTS SHOWN OUTSIDE THE LIMITS OF WORK.

APPROVAL STAMP
IDENTIFICATION STAMP
DIVISION OF THE STATE ARCHITECT
APPL 02- 107417
AC ____ FLS ____ SS ____
DATE: ____

NO.	ISSUED FOR	DATE
IB#34	INFORMATION BULLETIN #34	07/18/07
1	DSA APPROVAL SET	12/05/05

REGISTERED LANDSCAPE ARCHITECT
DAVID MEYER – No. 2265
Signature
Date
STATE OF CALIFORNIA

K M D
KAPLAN McLAUGHLIN DIAZ
ARCHITECTURE PLANNING
222 VALLEJO SAN FRANCISCO, CA 94111
(415) 398-5191 FAX (415) 394-7158

MEYER + SILBERBERG LAND ARCHITECTS
1443 Cornell Ave Berkeley CA 94702
tel 510 559 2973 fax 510 898 0488
www.meyersilberberg.com

SOLANO COMMUNITY COLLEGE

SCCD
VALLEJO CENTER
Contract # A003.6123.01.V1

PROJECT NO. 419-201
DATE 12-08-05

LANDSCAPE DETAILS

L6.10

PLOT DATE:

COPYRIGHT © 2004 BY KMD (KAPLAN McLAUGHLIN DIAZ). ALL RIGHTS RESERVED.

PATH: G:\000\000-000\ACAD\SHEETS\

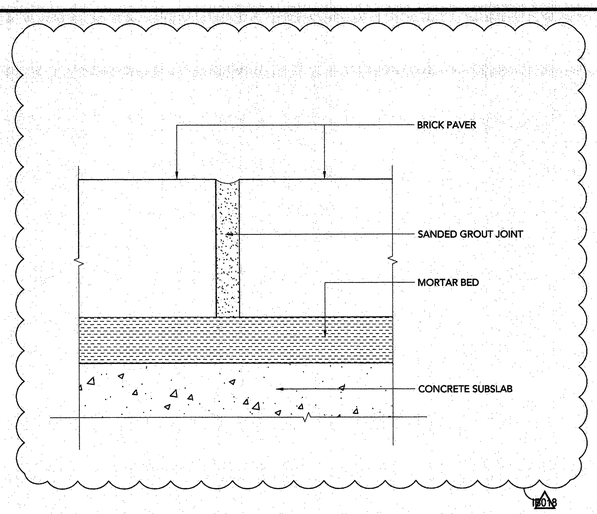

6 / - GROUT JOINT
SCALE: 0 1" 2" 3" Section

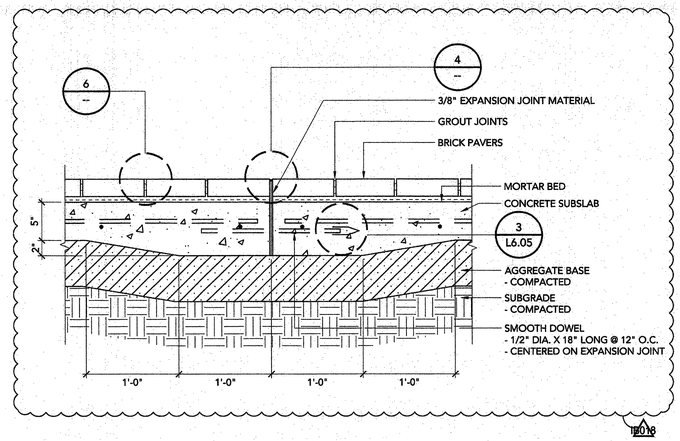

3 / - EXPANSION JOINT AT DONOR BRICKS
SCALE: 0 6" 1' 1'-6" 2' Plan

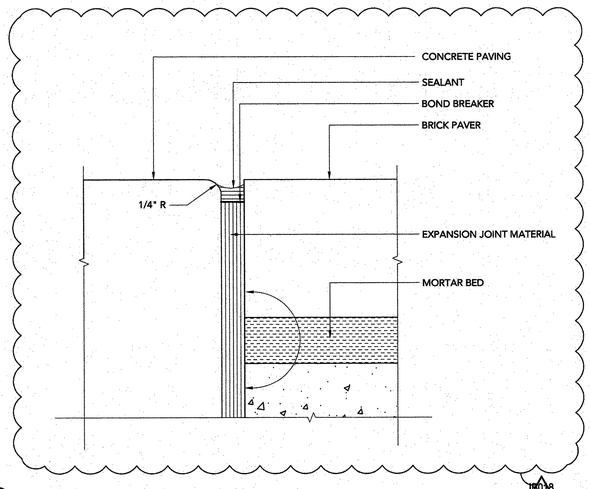

5 / - SEALANT JOINT
SCALE: 0 1" 2" 3" Section

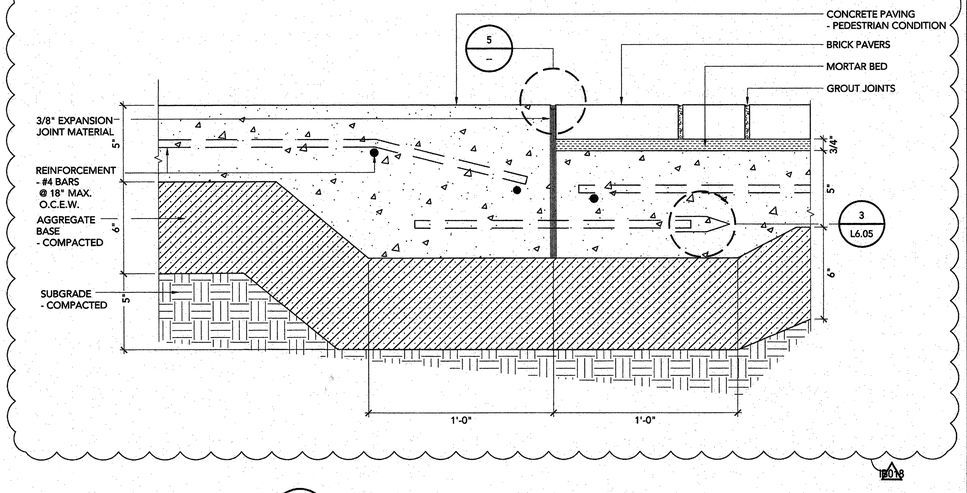

2 / - EXPANSION JOINT AT STEPPED SLAB
SCALE: 0 6" 1' Plan

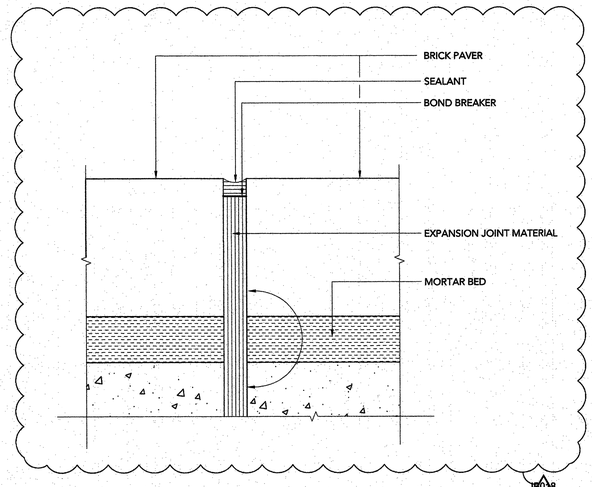

4 / - EXPANSION JOINT
SCALE: 0 1" 2" 3" Section

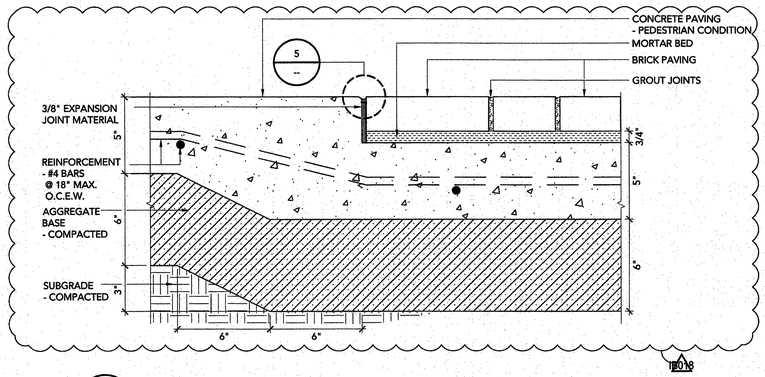

1 / - STEPPED SLAB AT CONCRETE PAVING & DONOR BRICKS
SCALE: 0 6" 1' Typical Section

FOR PURPOSES OF BIDDING, CONTRACTOR TO ASSUME THAT ALL CONSTRUCTION WITHIN THE LIMIT OF WORK WILL BE CONCURRENT WITH CONSTRUCTION BY THE CITY OF VALLEJO OF PART OR ALL OF THE COLUMBUS PARKWAY IMPROVEMENTS SHOWN OUTSIDE THE LIMITS OF WORK.

APPROVAL STAMP
IDENTIFICATION STAMP
DIVISION OF THE STATE ARCHITECT
APPL 02- 107417
AC ____ FLS ____ SS ____
DATE: ____

NO.	ISSUED FOR	DATE
2	INFORMATION BULLETIN #18	06/18/07
1	DSA APPROVAL SET	12/08/05

REGISTERED LANDSCAPE ARCHITECT
DAVID MEYER — No. 4345
Signature
Date
STATE OF CALIFORNIA

K M D
KAPLAN McLAUGHLIN DIAZ
ARCHITECTURE PLANNING
222 VALLEJO SAN FRANCISCO, CA 94111
(415) 398-5191 FAX (415) 394-7158

MEYER + SILBERBERG LAND ARCHITECTS
1443 Cornell Ave Berkeley CA 94702
tel 510 559 2973 fax 510 898 0488
www.meyersilberberg.com

SOLANO COMMUNITY COLLEGE

SCCD
VALLEJO CENTER
Contract # A003.6123.01.V1

PROJECT NO. 419-201
DATE 12-08-05

LANDSCAPE DETAILS

AS BUILTS

L6.11

PLOT DATE:

COPYRIGHT © 2004 BY KMD (KAPLAN McLAUGHLIN DIAZ). ALL RIGHTS RESERVED.

PATH: G:\000\000-000\ACAD\SHEETS\

IRRIGATION SYSTEM LEGEND

IRRIGATION WATER METER-3"	-BY CIVIL SECTION OF CONTRACT	
BACKFLOW PREVENTION DEVICE	-FEBCO-2333-905-205	
MASTER VALVE/FLOW SENSOR ASSEMBLY	-HORIZON-RSF-1F23BEK45E1000-WITH GROUNDING KIT	
CONTROLLER ASSEMBLY	-HORIZON-RSM-1P2AGGG34B5 RAINBIRD-CCU28W CLUSTER CONTROL UNIT (3) RAINBIRD-ESP40SAT2W CONTROLLERS RAINBIRD-PT1502 FLOW MONITOR PACKAGE ALL COMPONENTS ARE MOUNTED ON BACKBOARD FOR INDOOR INSTALLATION	
REMOTE CONTROL VALVE	-GRISWOLD-DWS SERIES	
QUICK COUPLING VALVE	-RAINBIRD-33DRC	
GATE VALVE	-NIBCO-T113-IRR-LINE SIZE	
12" POP-UP GEAR ROTOR	-HUNTER-I-20-36S-3.0SR	
12" POP-UP GEAR ROTOR	-HUNTER-I-20-36S-2.0SR	
12" POP-UP GEAR ROTOR	-HUNTER-I-20-ADS-3.0SR	
12" POP-UP GEAR ROTOR	-HUNTER-I-20-ADS-1.5SR	
12" POP-UP GEAR ROTOR	-HUNTER-I-20-ADS-2.0SR	
NOTE: ROTOR HEADS IN SEEDED TURF GRASS SHALL BE 4" POP-UP HEIGHT.		
6" POP-UP SPRAY HEADS	-HUNTER-INST-06-CV-15F,H,Q	
6" POP-UP SPRAY HEADS	-HUNTER-INST-06-CV-15A-120	
6" POP-UP SPRAY HEADS	-HUNTER-INST-06-CV-12F,H,Q	
6" POP-UP SPRAY HEADS	-HUNTER-INST-06-CV-12A-270,240,120	
6" POP-UP SPRAY HEADS	-HUNTER-INST-06-CV-10F,H,Q	
6" POP-UP SPRAY HEADS	-HUNTER-INST-06-CV-10A-120	
6" POP-UP SPRAY HEADS	-HUNTER-INST-06-CV-SS-530,L/RCS-515	
12" POP-UP SPRAY HEADS	-HUNTER-INST-12-CV-15F,H,Q	
12" POP-UP SPRAY HEADS	-HUNTER-INST-12-CV-15A-120	
12" POP-UP SPRAY HEADS	-HUNTER-INST-12-CV-12F,H,Q	
12" POP-UP SPRAY HEADS	-HUNTER-INST-12-CV-12A-240,120	
12" POP-UP SPRAY HEADS	-HUNTER-INST-12-CV-10F,H,Q	
12" POP-UP SPRAY HEADS	-HUNTER-INST-12-CV-10A-120	
12" POP-UP SPRAY HEADS	-HUNTER-INST-12-CV-8F,H	
12" POP-UP SPRAY HEADS	-HUNTER-INST-12-CV-SS-530,L/RCS-515	
12" POP-UP SPRAY HEADS	-HUNTER-INST-12-CV-4H,Q	
6" POP-UP DUAL-STREAM BUBBLER	-HUNTER-INST-06-CV-5-CST-B	
BUBBLER	-HUNTER-AFB	
P.C. BUBBLER	-HUNTER-PCB-.50	
IRRIGATION SUPPLYLINE-2" & LARGER	-1120/CLASS 315 PVC PIPE	-18" COVER
IRRIGATION SUPPLYLINE-1.5" & SMALLER	-1120/SCHEDULE 40 PVC PIPE	-18" COVER
IRRIGATION SPRINKLERLINE	-1120/SCHEDULE 40 PVC PIPE	-12" COVER
ELECTRICAL CONDUIT	-1120/SCHEDULE 40 ELECTRICAL CONDUIT	-24" COVER
SLEEVING	-1120/SCHEDULE 40 PVC PIPE	-24" COVER
sta / gpm / size: CONTROLLER STATION NUMBER GALLONS PER MINUTE THROUGH VALVE CONTROL VALVE SIZE		
CONDUIT FROM CONTROLLER THROUGH BUILDING	-BY ELECTRICAL SECTION OF CONTRACT	
HOSE BIBB	-CHAMPION-I-401-LK	

IB021

IRRIGATION SYSTEM NOTES

1. IRRIGATION SYSTEM IS DESIGNED FOR A MAXIMUM OF 120 G.P.M. AT 75 P.S.I. STATIC PRESSURE. VERIFY PRESSURE OF 75 P.S.I. AT THE POINT OF CONNECTION PRIOR TO INSTALLATION OF THE IRRIGATION SYSTEM. NOTIFY OWNERS REPRESENTATIVE OF ANY DISCREPANCIES IN PRESSURE.
2. NOTIFY OWNERS REPRESENTATIVE SIX (6) DAYS PRIOR TO INSTALLATION FOR A PRE-INSTALLATION CONFERENCE AND FIELD REVIEW COORDINATION FOR TRENCH DEPTHS, ASSEMBLY REVIEW, PRESSURE TESTS, COVERAGE TESTS, PRE- MAINTENANCE AND FINAL REVIEWS. A CONTINUITY TEST WILL BE REQUIRED FOR CONTROL WIRE STUBOUTS. NO SUBSTITUTIONS WILL BE ALLOWED WITHOUT PRIOR WRITTEN ACCEPTANCE FROM THE OWNERS REPRESENTATIVE.
3. 3" IRRIGATION WATER METER IS PROVIDED FOR IN IMMEDIATE VICINITY BY CIVIL SECTION OF CONTRACT. CONNECT TO DISCHARGE SIDE OF WATER METER.
4. INSTALL BACKFLOW PREVENTION DEVICE IN ENCLOSURE APPROXIMATELY WHERE INDICATED AS DETAILED AND ACCORDING TO LOCAL CODES. B.P.D. SHALL BE TESTED AND CERTIFIED PRIOR TO FINAL INSPECTION. CONTACT CITY OF VALLEJO FOR LIST OF CERTIFIED TESTERS.
5. INSTALL CONTROLLER ASSEMBLIES WHERE INDICATED. EXACT LOCATION OF CONTROLLER ASSEMBLIES TO BE DETERMINED AT JOBSITE BY ARCHITECT. 120 VOLT ELECTRICAL SUPPLY IS PROVIDED FOR IN IMMEDIATE VICINITY BY ELECTRICAL SECTION OF CONTRACT. MAKE FINAL 120 VOLT ELECTRICAL CONNECTION TO CONTROLLERS. USE THIN WALL METAL CONDUIT ABOVE GRADE. USE WATERPROOF CONNECTIONS FOR OUTDOOR INSTALLATION. PROGRAM CONTROLLERS TO NOT EXCEED MAXIMUM FLOW RATE STATED IN NOTE NO. 1. INSTALL PER MANUFACTURERS SPECIFICATIONS. CONTROLLER ASSEMBLIES SHALL BE PROPERLY GROUNDED PER ARTICLE 250 OF THE NATIONAL ELECTRIC CODE AND MANUFACTURERS GROUNDING GUIDELINES. INSTALL AS DETAILED. SEAL ALL CONDUIT HOLES WITH SILICONE OR ACCEPTED SUBSTITUTE. PROGRAM CONTROLLER TO IRRIGATE USING MULTIPLE REPEAT CYCLES OF SHORT DURATIONS. CARE SHALL BE TAKEN TO PREVENT RUNOFF OF WATER AND SLOPE/SOIL EROSION DUE TO PROLONGED APPLICATIONS OF WATER. CONNECT CONTROLLERS TO CCU WITH RAINBIRD MAXICOM CABLE. CONNECT CONTROLLERS TO FLOW SENSOR WITH RAINBIRD MAXICOM CABLE IN 1" PVC SCHEDULE 40 ELECTRICAL CONDUIT EIGHTEEN INCHES BELOW GRADE. CONNECT CLUSTER CONTROL UNIT TO DATA OUTLET PROVIDED FOR IN ELECTRICAL SECTION OF CONTRACT. ROUTE LOW VOLTAGE WIRING THROUGH CONDUITS PROVIDED FOR IN ELECTRICAL SECTION OF CONTRACT.
6. INSTALL FLOW SENSOR, MASTER VALVE, REMOTE CONTROL VALVES, QUICK COUPLING VALVES, AND GATE VALVES AS DETAILED. INSTALL R.C.V. ID TAGS MANUFACTURED BY T. CHRISTY ENT. STANDARD SIZE, 1 1/8" HOT STAMPED BLACK LETTERS ON YELLOW BACKGROUND ON SOLENOID WIRES. LETTERS TO CONFORM TO CONTROLLER/STATION NUMBER.
7. ALL SPRINKLER HEADS SHALL HAVE RISER ASSEMBLIES AS DETAILED. INSTALL CHECK VALVES AS SHOWN ON BUBBLER RISER ASSEMBLY DETAILS WHERE LOW HEAD DRAINAGE OCCURS. NOTE ESPECIALLY TO AVOID DRAINAGE AT SIDEWALKS AND OTHER POINTS WHERE PUDDLING WILL CAUSE DAMAGE OR HAZARD. LEAN SPRINKLER HEADS (ANGLE VARIES DEPENDING UPON TRAJECTORY OF SPRAY AND DEGREE OF SLOPE) TO MAXIMIZE UPHILL THROW.
8. ADJUST ALL SPRINKLER HEADS FOR COMPLETE COVERAGE WITH NO OVERSPRAY ON BUILDINGS, ASPHALT, SIDEWALKS, ROADWAYS, ETC., AND THROTTLE FLOW CONTROL AT VALVES FOR OPTIMUM OPERATION. WHEN THROTTLING IS NOT USED TO CONTROL MISTING OR OVERSPRAY, BACK-OFF MANUAL FLOW CONTROL 1/2 TO 1 1/2 TURNS FROM POINT WHERE CLOSING EFFECTS SPRINKLER COVERAGE. ADJUST ALL BUBBLERS AT TREES AS REQUIRED FOR DEEP ROOT WATERING.
9. ALL PIPE UNDER PAVEMENT SHALL BE CLASS 315 PVC FOR 2" AND LARGER AND SCHEDULE 40 PVC FOR 1.5" AND SMALLER. ALL PIPE AND WIRING UNDER PAVEMENT SHALL BE INSTALLED AT A TWENTY FOUR INCH (24") DEPTH BELOW GRADE. ALL SUPPLYLINE PIPE AND WIRING UNDER PAVEMENT SHALL BE INSTALLED IN PVC SCHEDULE 40 SLEEVING AND ELECTRICAL CONDUIT. SLEEVING AND ELECTRICAL CONDUIT SHALL EXTEND SIX INCHES (6") BEYOND EDGE OF PAVEMENT OR CURB. INSTALL SAND FOR BACKFILL IN VEHICULAR PAVEMENT AREAS TO 6" COVER ABOVE PIPE. SURROUND PIPE WITH SAND IN AREAS WHERE ROCKY TERRAIN IS ENCOUNTERED.
10. ALL VALVE CONTROL WIRE SHALL BE MINIMUM NO. 14 AWG COPPER UL APPROVED FOR DIRECT BURIAL IN GROUND. CONNECT WIRES WITH 3M DBY CONNECTORS PER MANUFACTURERS SPECIFICATIONS. RUN TWO (2) EXTRA CONTROL WIRES OF DIFFERENT COLOR THROUGH ALL VALVE LOCATIONS FROM THEIR RESPECTIVE CONTROLLERS. EACH WIRE AT VALVES SHALL HAVE 24" EXCESS COILED LOOP IN VALVE BOXES. TAPE WIRES IN BUNDLES EVERY TEN FEET IN PLANTING AREAS.
11. REFER TO SPECIFICATIONS FOR FURTHER INFORMATION REGARDING THIS PROJECT.

SUGGESTED IRRIGATION SCHEDULES

NUMBER IN MONTH COLUMN INDICATES MONTHLY FREQUENCY

STA	RUNTIME	CYCLES	MIN/CYCLE	JAN	FEB	MAR	APR	MAY	JUN	JUL	AUG	SEP	OCT	NOV	DEC	ANN GAL
A-1	SPARE															
A-2	SPARE															
A-3	SPARE															
A-4	SPARE															
A-5	SPARE															
A-6	SPARE															
A-7	SPARE															
A-8	SPARE															
A-9	SPARE															
A-10	SPARE															
A-11	SPARE															
A-12	SPARE															
A-13	SPARE															
A-14	SPARE															
A-15	SPARE															
A-16	35	19	2	0.0	0.0	0.2	0.3	0.6	0.6	0.8	0.7	0.5	0.2	0.0	0.0	2,430
A-17	111	11	10	0.0	0.0	0.2	0.3	0.5	0.5	0.6	0.5	0.4	0.2	0.0	0.0	11,507
A-18	35	19	2	0.0	0.0	0.2	0.3	0.6	0.6	0.8	0.7	0.5	0.2	0.0	0.0	3,780
A-19	163	10	16	0.0	0.0	0.2	0.3	0.5	0.5	0.6	0.5	0.4	0.2	0.0	0.0	4,490
A-20	163	10	16	0.0	0.0	0.2	0.3	0.5	0.5	0.6	0.5	0.4	0.2	0.0	0.0	12,972
A-21	300	10	30	0.0	0.0	0.2	0.3	0.5	0.5	0.6	0.5	0.4	0.2	0.0	0.0	13,770
A-22	163	10	16	0.0	0.0	0.2	0.3	0.5	0.5	0.6	0.5	0.4	0.2	0.0	0.0	12,972
A-23	35	19	2	0.0	0.0	0.2	0.3	0.6	0.6	0.8	0.7	0.5	0.2	0.0	0.0	3,510
A-24	163	10	16	0.0	0.0	0.2	0.3	0.5	0.5	0.6	0.5	0.4	0.2	0.0	0.0	4,490
A-25	163	10	16	0.0	0.0	0.2	0.3	0.5	0.5	0.6	0.5	0.4	0.2	0.0	0.0	15,965
A-26	35	19	2	0.0	0.0	0.2	0.3	0.6	0.6	0.8	0.7	0.5	0.2	0.0	0.0	4,320
A-27	163	10	16	0.0	0.0	0.2	0.3	0.5	0.5	0.6	0.5	0.4	0.2	0.0	0.0	11,475
A-28	35	19	2	0.0	0.0	0.1	0.2	0.4	0.4	0.5	0.4	0.3	0.1	0.0	0.0	2,688
A-29	66	7	10	0.0	0.0	0.8	1.3	2.1	2.1	2.9	2.5	1.7	0.8	0.0	0.0	16,922
A-30	66	7	10	0.0	0.0	0.8	1.3	2.1	2.1	2.9	2.5	1.7	0.8	0.0	0.0	16,922
A-31	35	19	2	0.0	0.0	0.1	0.2	0.4	0.4	0.5	0.4	0.3	0.1	0.0	0.0	2,688
A-32	66	7	10	0.0	0.0	0.8	1.3	2.1	2.1	2.9	2.5	1.7	0.8	0.0	0.0	16,922
A-33	66	7	10	0.0	0.0	0.8	1.3	2.1	2.1	2.9	2.5	1.7	0.8	0.0	0.0	16,922
A-34	35	19	2	0.0	0.0	0.1	0.2	0.4	0.4	0.5	0.4	0.3	0.1	0.0	0.0	2,688
A-35	66	7	10	0.0	0.0	0.8	1.3	2.1	2.1	2.9	2.5	1.7	0.8	0.0	0.0	16,922
A-36	66	7	10	0.0	0.0	0.8	1.3	2.1	2.1	2.9	2.5	1.7	0.8	0.0	0.0	16,922
A-37	66	7	10	0.0	0.0	0.8	1.3	2.1	2.1	2.9	2.5	1.7	0.8	0.0	0.0	16,922
A-38	35	19	2	0.0	0.0	0.1	0.2	0.4	0.4	0.5	0.4	0.3	0.1	0.0	0.0	2,688
A-39	66	7	10	0.0	0.0	0.8	1.3	2.1	2.1	2.9	2.5	1.7	0.8	0.0	0.0	16,922
A-40	SPARE															
GAL																247,806

NUMBER IN MONTH COLUMN INDICATES MONTHLY FREQUENCY

STA	RUNTIME	CYCLES	MIN/CYCLE	JAN	FEB	MAR	APR	MAY	JUN	JUL	AUG	SEP	OCT	NOV	DEC	ANN GAL
B-1	80	8	10	0.1	0.1	0.9	1.5	2.3	2.5	2.8	2.5	2.1	1.3	0.1	0.0	23,011
B-2	28	15	2	0.0	0.0	0.1	0.3	0.4	0.4	0.5	0.4	0.4	0.2	0.0	0.0	2,437
B-3	66	7	10	0.1	0.1	0.9	1.5	2.3	2.5	2.8	2.5	2.1	1.3	0.1	0.0	19,176
B-4	300	10	30	0.0	0.0	0.2	0.3	0.5	0.5	0.6	0.5	0.5	0.3	0.0	0.0	12,484
B-5	66	7	10	0.0	0.0	0.3	0.5	0.8	0.9	1.0	0.9	0.8	0.5	0.0	0.0	11,506
B-6	35	19	2	0.0	0.0	0.1	0.3	0.4	0.4	0.5	0.4	0.4	0.2	0.0	0.0	1,713
B-7	66	7	10	0.0	0.0	0.3	0.5	0.8	0.9	1.0	0.9	0.8	0.5	0.0	0.0	10,739
B-8	66	7	10	0.1	0.1	1.9	3.4	5.1	5.6	6.3	5.6	4.7	2.9	0.1	0.1	57,273
B-9	33	3	10	0.2	0.2	2.4	4.2	6.4	6.9	7.8	6.9	5.9	3.7	0.2	0.1	52,202
B-10	33	3	10	0.2	0.2	2.4	4.2	6.4	6.9	7.8	6.9	5.9	3.7	0.2	0.1	47,727
B-11	33	3	10	0.2	0.2	2.4	4.2	6.4	6.9	7.8	6.9	5.9	3.7	0.2	0.1	52,202
B-12	33	3	10	0.2	0.2	2.4	4.2	6.4	6.9	7.8	6.9	5.9	3.7	0.2	0.1	38,779
B-13	35	19	2	0.0	0.0	0.2	0.4	0.6	0.7	0.8	0.7	0.6	0.4	0.0	0.0	2,754
B-14	343	34	10	0.0	0.0	0.2	0.4	0.6	0.7	0.8	0.7	0.6	0.4	0.0	0.0	20,036
B-15	343	34	10	0.0	0.0	0.2	0.4	0.6	0.7	0.8	0.7	0.6	0.4	0.0	0.0	27,742
B-16	33	3	10	0.2	0.2	2.4	4.2	6.4	6.9	7.8	6.9	5.9	3.7	0.2	0.1	49,219
B-17	35	19	2	0.0	0.0	0.2	0.4	0.6	0.7	0.8	0.7	0.6	0.4	0.0	0.0	1,836
B-18	33	3	10	0.2	0.2	2.4	4.2	6.4	6.9	7.8	6.9	5.9	3.7	0.2	0.1	53,693
B-19	66	7	10	0.0	0.0	0.3	0.5	0.8	0.9	1.0	0.9	0.8	0.5	0.0	0.0	16,108
B-20	71	19	4	0.0	0.0	0.2	0.4	0.6	0.7	0.8	0.7	0.6	0.4	0.0	0.0	5,355
B-21	66	7	10	0.0	0.0	0.3	0.5	0.8	0.9	1.0	0.9	0.8	0.5	0.0	0.0	13,423
B-22	300	10	30	0.0	0.0	0.2	0.3	0.5	0.5	0.6	0.5	0.5	0.3	0.0	0.0	30,169
B-23	163	10	16	0.0	0.0	0.2	0.3	0.5	0.5	0.6	0.5	0.5	0.3	0.0	0.0	16,396
B-24	163	10	16	0.0	0.0	0.2	0.3	0.5	0.5	0.6	0.5	0.5	0.3	0.0	0.0	19,789
B-25	300	10	30	0.0	0.0	0.2	0.3	0.5	0.5	0.6	0.5	0.5	0.3	0.0	0.0	24,967
B-26	111	11	10	0.0	0.0	0.2	0.3	0.5	0.5	0.6	0.5	0.5	0.3	0.0	0.0	11,889
B-27	35	19	2	0.0	0.0	0.2	0.4	0.6	0.7	0.8	0.7	0.6	0.4	0.0	0.0	1,836
B-28	111	11	10	0.0	0.0	0.2	0.3	0.5	0.5	0.6	0.5	0.5	0.3	0.0	0.0	11,506
B-29	19	10	2	0.0	0.0	0.2	0.3	0.5	0.5	0.6	0.5	0.5	0.3	0.0	0.0	1,625
B-30	97	10	10	0.0	0.0	0.2	0.3	0.5	0.5	0.6	0.5	0.5	0.3	0.0	0.0	7,047
B-31	300	10	30	0.0	0.0	0.2	0.3	0.5	0.5	0.6	0.5	0.5	0.3	0.0	0.0	6,242
B-32	35	19	2	0.0	0.0	0.2	0.4	0.6	0.7	0.8	0.7	0.6	0.4	0.0	0.0	4,896
B-33	163	10	16	0.0	0.0	0.2	0.3	0.5	0.5	0.6	0.5	0.5	0.3	0.0	0.0	16,962
B-34	111	11	10	0.0	0.0	0.2	0.3	0.5	0.5	0.6	0.5	0.5	0.3	0.0	0.0	1,534
B-35	111	11	10	0.0	0.0	0.2	0.3	0.5	0.5	0.6	0.5	0.5	0.3	0.0	0.0	12,273
B-36	163	10	16	0.0	0.0	0.2	0.3	0.5	0.5	0.6	0.5	0.5	0.3	0.0	0.0	15,265
B-37	35	19	2	0.0	0.0	0.2	0.4	0.6	0.7	0.8	0.7	0.6	0.4	0.0	0.0	3,366
B-38	SPARE															
B-39	SPARE															
B-40	SPARE															
GAL																705,176

NUMBER IN MONTH COLUMN INDICATES MONTHLY FREQUENCY

STA	RUNTIME	CYCLES	MIN/CYCLE	JAN	FEB	MAR	APR	MAY	JUN	JUL	AUG	SEP	OCT	NOV	DEC	ANN GAL
C-1	SPARE															
C-2	SPARE															
C-3	SPARE															
C-4	SPARE															
C-5	SPARE															
C-6	SPARE															
C-7	SPARE															
C-8	SPARE															
C-9	SPARE															
C-10	SPARE															
C-11	SPARE															
C-12	SPARE															
C-13	SPARE															
C-14	SPARE															
C-15	SPARE															
C-16	35	19	2	0.0	0.0	0.2	0.4	0.6	0.7	0.8	0.7	0.6	0.4	0.0	0.0	130
C-17	35	19	2	0.0	0.0	0.2	0.4	0.6	0.7	0.8	0.7	0.6	0.4	0.0	0.0	130
C-18	33	3	10	0.2	0.2	2.4	4.2	6.4	6.9	7.8	6.9	5.9	3.7	0.2	0.1	41,762
C-19	35	19	2	0.0	0.0	0.1	0.3	0.4	0.4	0.5	0.4	0.4	0.2	0.0	0.0	571
C-20	111	11	10	0.0	0.0	0.1	0.2	0.3	0.3	0.3	0.3	0.3	0.2	0.0	0.0	5,114
C-21	111	11	10	0.0	0.0	0.1	0.2	0.3	0.3	0.3	0.3	0.3	0.2	0.0	0.0	3,196
C-22	66	7	10	0.0	0.0	0.3	0.5	0.8	0.9	1.0	0.9	0.8	0.5	0.0	0.0	3,835
C-23	66	7	10	0.1	0.1	0.8	1.4	2.1	2.2	2.5	2.2	1.9	1.2	0.1	0.0	23,970
C-24	33	3	10	0.2	0.2	2.4	4.2	6.4	6.9	7.8	6.9	5.9	3.7	0.2	0.1	44,745
C-25	33	3	10	0.2	0.2	2.4	4.2	6.4	6.9	7.8	6.9	5.9	3.7	0.2	0.1	38,779
C-26	49	3	16	0.2	0.2	2.4	4.2	6.4	6.9	7.8	6.9	5.9	3.7	0.2	0.1	46,173
C-27	90	3	30	0.2	0.2	2.4	4.2	6.4	6.9	7.8	6.9	5.9	3.7	0.2	0.1	80,913
C-28	49	3	16	0.2	0.2	2.4	4.2	6.4	6.9	7.8	6.9	5.9	3.7	0.2	0.1	50,571
C-29	33	3	10	0.0	0.0	2.3	3.5	5.8	5.8	8.2	7.0	4.7	2.3	0.0	0.0	51,329
C-30	66	7	10	0.0	0.0	0.8	1.1	1.9	1.9	2.6	2.3	1.5	0.8	0.0	0.0	15,229
C-31	49	3	16	0.0	0.0	0.6	0.9	1.5	1.5	2.1	1.8	1.2	0.6	0.0	0.0	998
C-32	35	19	2	0.0	0.0	0.1	0.2	0.4	0.4	0.5	0.4	0.3	0.1	0.0	0.0	168
C-33	33	3	10	0.0	0.0	2.3	3.5	5.8	5.8	8.2	7.0	4.7	2.3	0.0	0.0	63,174
C-34	71	19	4	0.0	0.0	0.2	0.3	0.6	0.6	0.8	0.7	0.5	0.2	0.0	0.0	4,860
C-35	71	19	4	0.0	0.0	0.4	0.5	0.9	0.9	1.2	1.1	0.7	0.4	0.0	0.0	1,680
C-36	33	3	10	0.0	0.0	2.3	3.5	5.8	5.8	8.2	7.0	4.7	2.3	0.0	0.0	67,123
C-37	33	3	10	0.0	0.0	2.3	3.5	5.8	5.8	8.2	7.0	4.7	2.3	0.0	0.0	61,858
C-38	86	23	4	0.0	0.0	0.2	0.4	0.6	0.7	0.8	0.7	0.6	0.4	0.0	0.0	5,573
C-39	86	23	4	0.0	0.0	0.2	0.4	0.6	0.7	0.8	0.7	0.6	0.4	0.0	0.0	5,573
C-40	SPARE															
GAL																617,453

MAWA/EAWU FIGURES

SOLANO C. C.		
VALLEJO		
MAWA	3,320,629	GALLONS
EAWU	1,570,435	GALLONS

I.S.C. IRRIGATION SYSTEM GROUP, INC. CONSULTANTS
MEMBER • AMERICAN SOCIETY OF IRRIGATION CONSULTANTS
340 Church Street, Livermore, CA 94550
Phone 925/371-8230 Fax 925/371-8240

© All ideas, designs, and specifications represented are the property of I.S.C. Group, Inc. and are protected by copyright laws.

04148-100

FILE COPY

FOR PURPOSES OF BIDDING, CONTRACTOR TO ASSUME THAT ALL CONSTRUCTION WITHIN THE LIMIT OF WORK WILL BE CONCURRENT WITH CONSTRUCTION BY THE CITY OF VALLEJO OF PART OR ALL OF THE COLUMBUS PARKWAY IMPROVEMENTS SHOWN OUTSIDE THE LIMITS OF WORK.

APPROVAL STAMP
IDENTIFICATION STAMP
DIVISION OF THE STATE ARCHITECT
APPL 02- 107417
AC ____ FLS ____ SS ____
DATE: ____

NO.	ISSUED FOR	DATE
IB021	INFORMATION BULLETIN #21	06/01/07
2	ADDENDUM #2	02/21/06
1	DSA APPROVAL SET	12/08/05

CERTIFIED BY: IVY L. MUNION · CERTIFIED IRRIGATION DESIGNER · COMMERCIAL · 002026

KMD
KAPLAN McLAUGHLIN DIAZ
ARCHITECTURE PLANNING
222 VALLEJO SAN FRANCISCO, CA 94111
(415) 398-5191 FAX (415) 394-7158

MEYER + SILBERBERG
1443 Cornell Ave Berkeley CA 94702
tel 510 559 2973 fax 510 898 0488
www.meyersilberberg.com

SOLANO COMMUNITY COLLEGE

SCCD
VALLEJO CENTER
Contract # A003.6123.01.V1

PROJECT NO. 419-201 DATE 12-08-05

LANDSCAPE
IRRIGATION NOTES
AND LEGEND

L7.01

PLOT DATE:

COPYRIGHT © 2004 BY KMD (KAPLAN McLAUGHLIN DIAZ). ALL RIGHTS RESERVED.

PATH: G:\000\000-000\ACAD\SHEETS\

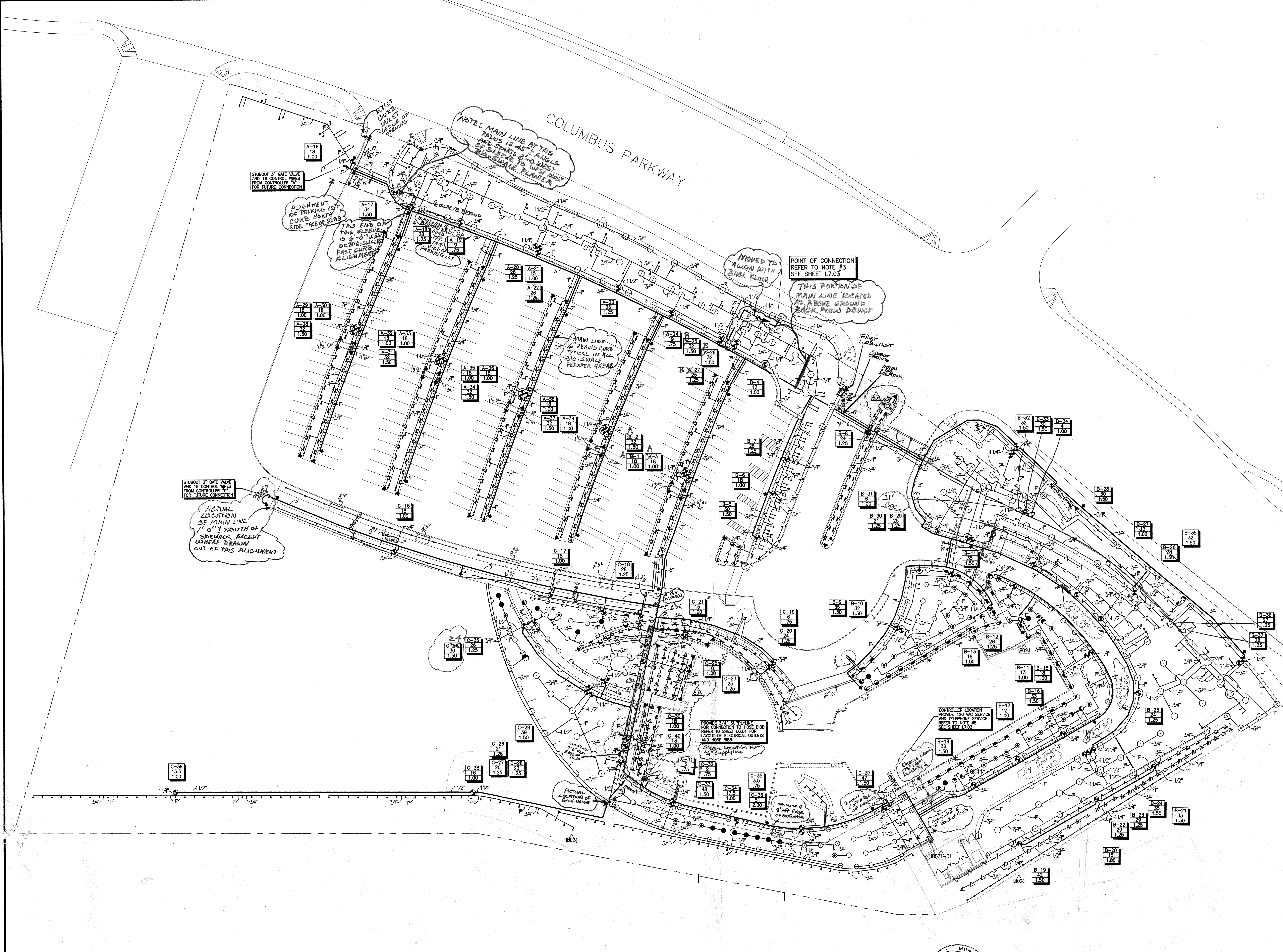

IVY L. MUNION CERTIFIED IRRIGATION DESIGNER COMMERCIAL 002026

I.S.C. GROUP, INC. IRRIGATION SYSTEM CONSULTANTS
MEMBER • AMERICAN SOCIETY OF IRRIGATION CONSULTANTS
340 Church Street, Livermore, CA 94550
Phone 925/371-8230 Fax 925/371-8240
© All ideas, designs, and specifications represented are the property of I.S.C. Group, Inc. and are protected by copyright laws.
04148-100

0 15 30 60 FEET

N

APPROVAL STAMP

IDENTIFICATION STAMP
DIVISION OF THE STATE ARCHITECT
APPL 02- 107417
AC [signature] FLS TH SS [signature]
DATE: 12/21/05

IB34	INFORMATION BULLETIN #34	07/18/07
IB021-R1	INFORMATION BULLETIN 021-R1	06/22/07
IB021	INFORMATION BULLETIN #21	06/01/07
1	DSA APPROVAL SET	12/08/05
NO.	ISSUED FOR	DATE

REGISTERED LANDSCAPE ARCHITECT
DAVID MEYER – No. 2565
Signature
Date
STATE OF CALIFORNIA

K M D
KAPLAN McLAUGHLIN DIAZ
ARCHITECTURE PLANNING
222 VALLEJO SAN FRANCISCO, CA 94111
(415) 398-5191 FAX (415) 394-7158

MEYER + SILBERBERG LAND ARCHITECTS
1443 Cornell Ave Berkeley CA 94702
tel 510 559 2973 fax 510 898 0488
www.meyersilberberg.com

SOLANO COMMUNITY COLLEGE

SCCD
VALLEJO CENTER
Contract # A003.6123.01.V1

PROJECT NO. 419-201
DATE 12-08-05

LANDSCAPE
IRRIGATION PLAN
AS BUILTS

L7.02

COPYRIGHT © 2004 BY KMD (KAPLAN McLAUGHLIN DIAZ). ALL RIGHTS RESERVED.

PLOT DATE:

PATH: G:\000\000-000\ACAD\SHEETS\

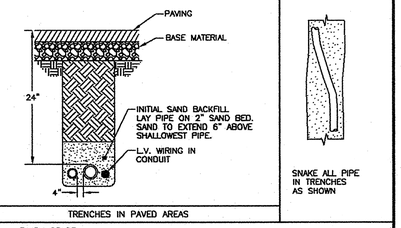

A TRENCHING DETAILS NTS

UNPUBLISHED WORK © 1998 I.S.C. GROUP, INC.

NOTES: 1. CENTER BOXES OVER VALVES.
2. SET BOXES IN TURF AREA WHERE POSSIBLE.
3. SET BOXES PARALLEL TO EACH OTHER AND PERPENDICULAR TO EDGE.
4. AVOID HEAVILY COMPACTING SOIL AROUND BOXES TO PREVENT DAMAGING VALVE BOXES.

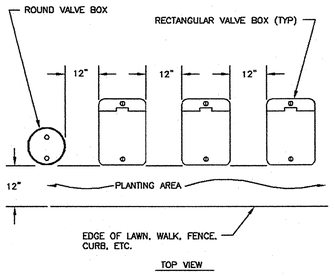

B VALVE BOX INSTALLATION DETAIL NTS

UNPUBLISHED WORK © 1998 I.S.C. GROUP, INC.

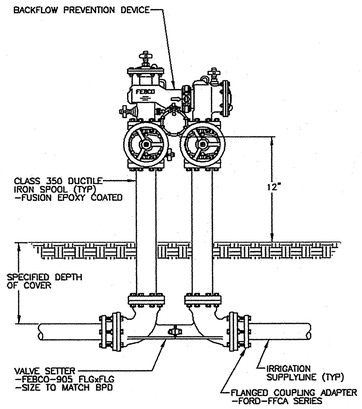

C BACKFLOW PREVENTION DEVICE INSTALLATION DETAIL NTS

UNPUBLISHED WORK © 1998 I.S.C. GROUP, INC.

NOTE: 1. ON SLOPES, PAD TO BE OF SUFFICIENT THICKNESS TO EXTEND 3" BELOW LOWEST POINT OF FINISH GRADE.
2. EMBED MOUNTING BASE ASSEMBLIES IN CONCRETE EQUIPMENT PAD PER MANUFACTURERS SPECIFICATIONS

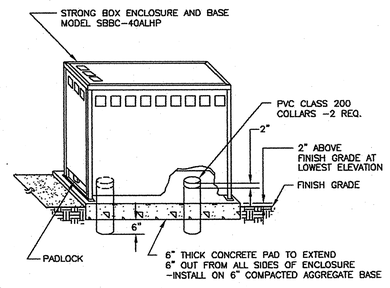

D BACKFLOW PREVENTER ASSEMBLY ENCLOSURE NTS

NOTE: ALL CONDUIT SHALL BE RIGID METAL-SIZE AS REQUIRED

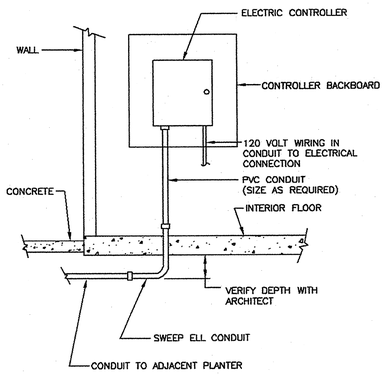

E WALL MOUNT CONTROLLER INSTALLATION DETAIL NTS

NOTES: 1. SET TOP OF BOX EVEN WITH FINISH GRADE IN SEEDED TURF GRASS AND NATIVE LAWN AREAS.
2. ALLOW 10 PIPE DIAMETERS UPSTREAM AND 5 PIPE DIAMETERS DOWNSTREAM FROM SENSOR OF STRAIGHT UNOBSTRUCTED PIPE TO ENSURE PROPER FLOW READING.

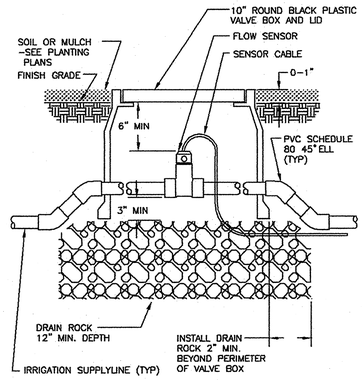

F FLOW SENSOR INSTALLATION DETAIL NTS

UNPUBLISHED WORK © 1998 I.S.C. GROUP, INC.

NOTE: SET TOP OF BOX EVEN WITH FINISH GRADE IN SEEDED TURF GRASS AND NATIVE LAWN AREAS.

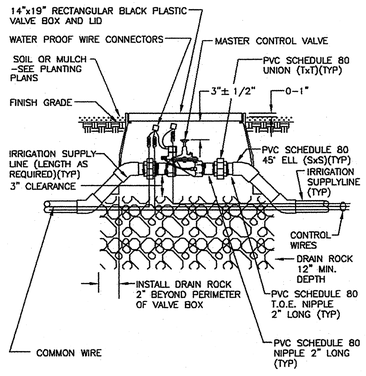

G MASTER CONTROL VALVE INSTALLATION DETAIL NTS

UNPUBLISHED WORK © 1998 I.S.C. GROUP, INC.

NOTE: SET TOP OF BOX EVEN WITH FINISH GRADE IN SEEDED TURF GRASS AND NATIVE LAWN AREAS.

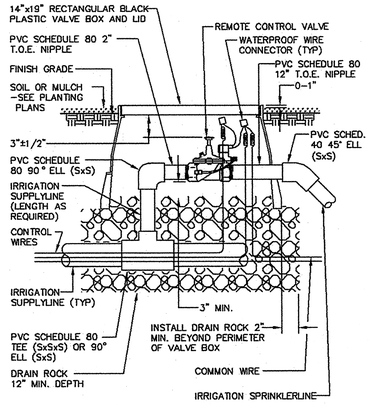

H REMOTE CONTROL VALVE INSTALLATION DETAIL NTS

UNPUBLISHED WORK © 1998 I.S.C. GROUP, INC.

NOTE: SET TOP OF BOX EVEN WITH FINISH GRADE IN SEEDED TURF GRASS AND NATIVE LAWN AREAS.

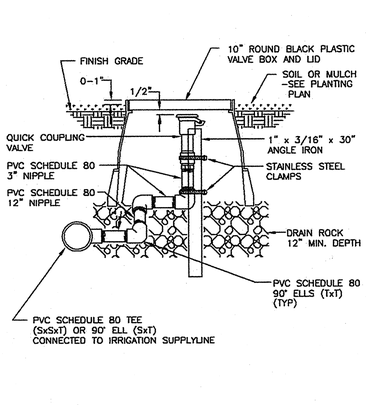

I QUICK COUPLING VALVE RISER ASSEMBLY DETAIL NTS

UNPUBLISHED WORK © 1998 I.S.C. GROUP, INC.

NOTE: SET TOP OF BOX EVEN WITH FINISH GRADE IN SEEDED TURF GRASS AND NATIVE LAWN AREAS.

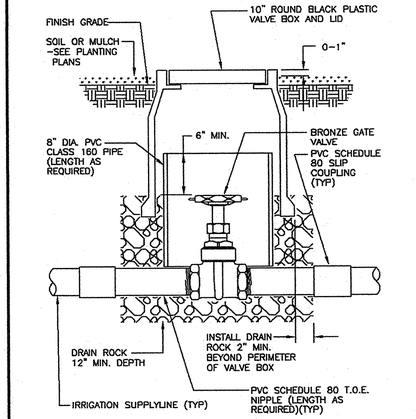

J GATE VALVE INSTALLATION DETAIL NTS

UNPUBLISHED WORK © 1998 I.S.C. GROUP, INC.

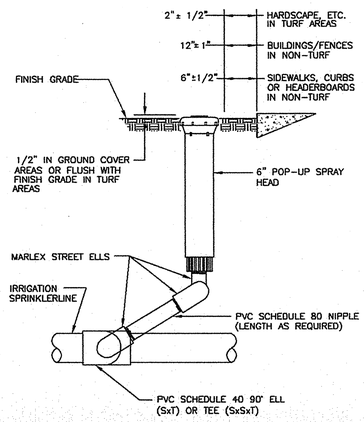

K 6" POP-UP SPRAY HEAD RISER ASSEMBLY DETAIL NTS

UNPUBLISHED WORK © 1998 I.S.C. GROUP, INC.

NOTE: INSTALL BUBBLER ABOVE ROOT BALL. INSTALL BUBBLER ON UPHILL SIDE OF PLANT WHERE APPLICABLE. ALLOW 6" MINIMUM DISTANCE BETWEEN BUBBLER AND TREE TRUNK.

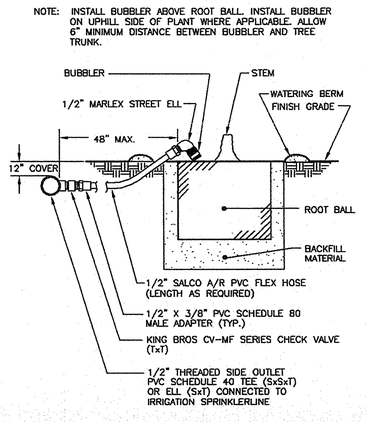

L BUBBLER INSTALLATION DETAIL FOR TREES IN GROUND COVER AREAS NTS

UNPUBLISHED WORK © 1998 I.S.C. GROUP, INC.

NOTE: CUT SLOT IN DRAIN PIPE FOR NIPPLE

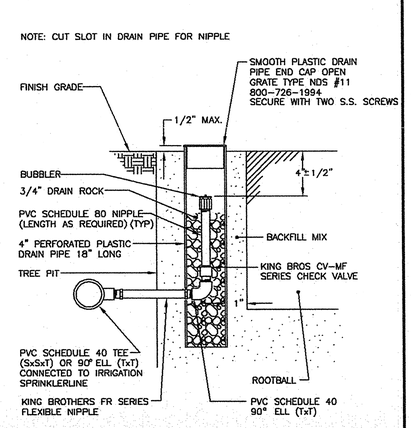

M BUBBLER INSTALLATION DETAIL FOR TREES IN TURF AREAS NTS

UNPUBLISHED WORK © 1998 I.S.C. GROUP, INC.

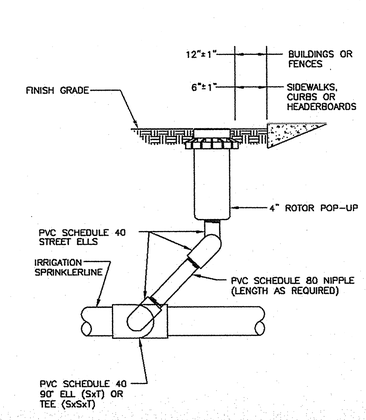

N 4" ROTOR POP-UP RISER ASSEMBLY DETAIL NTS

UNPUBLISHED WORK © 1998 I.S.C. GROUP, INC.

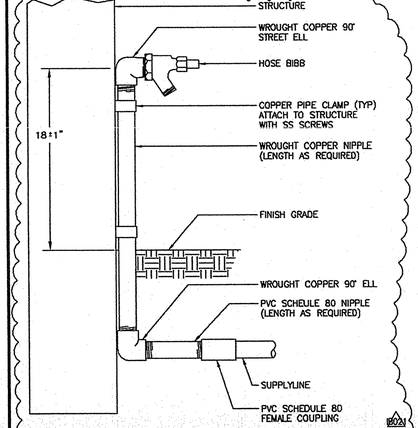

Q HOSE BIBB RISER ASSEMBLY DETAIL NTS

FILE COPY

FOR PURPOSES OF BIDDING, CONTRACTOR TO ASSUME THAT ALL CONSTRUCTION WITHIN THE LIMIT OF WORK WILL BE CONCURRENT WITH CONSTRUCTION BY THE CITY OF VALLEJO OF PART OR ALL OF THE COLUMBUS PARKWAY IMPROVEMENTS SHOWN OUTSIDE THE LIMITS OF WORK.

APPROVAL STAMP
IDENTIFICATION STAMP
DIVISION OF THE STATE ARCHITECT
APPL 02- 107417
AC _____ FLS _____ SS _____
DATE: _____

NO.	ISSUED FOR	DATE
3	INFORMATION BULLETIN #21	06/01/07
2	ADDENDUM #2	02/21/06
1	DSA APPROVAL SET	12/08/05

CERTIFIED BY

K M D
KAPLAN McLAUGHLIN DIAZ
ARCHITECTURE PLANNING
222 VALLEJO SAN FRANCISCO, CA 94111
(415) 398-5191 FAX (415) 394-7158

MEYER + SILBERBERG
1443 Cornell Ave Berkeley CA 94702
tel 510 559 2973 fax 510 898 0488
www.meyersilberberg.com

SOLANO COMMUNITY COLLEGE

SCCD
VALLEJO CENTER
Contract # A003.6123.01.V1

PROJECT NO.	DATE
419-201	12-08-05

LANDSCAPE IRRIGATION DETAILS

L7.03

I.S.C. IRRIGATION SYSTEM GROUP, INC. CONSULTANTS
MEMBER-AMERICAN SOCIETY OF IRRIGATION CONSULTANTS
340 Church Street, Livermore, CA 94550
Phone 925/371-8230 Fax 925/371-8240
© All ideas, designs, and specifications represented are the property of I.S.C. Group, Inc. and are protected by copyright laws.
04148-100

PLOT DATE:

COPYRIGHT © 2004 BY KMD (KAPLAN McLAUGHLIN DIAZ). ALL RIGHTS RESERVED.

ABBREVIATIONS

NOTE: ABBREVIATIONS LISTED ARE FOR GENERAL USE, DEREGARD THOSE WHICH AE NOT USED.

ABBREV	DESCRIPTION
AAD	AUTOMATIC AIR DAMPER
AAV	AUTOMATIC AIR VENT
AD	ACCESS DOOR (IN DUCT OR EQUIPMENT)
ADJ	ADJUSTABLE
AE	ACID EXHAUST
AFF	ABOVE FINISHED FLOOR
AFM	AIR FLOW MONITOR
AFS	AUTOMATIC FIRE SPRINKLER
AFS	AIR FLOW SWITCH
AHU	AIR HANDLING UNIT
AI	ANALOG INPUT
AL	ACOUSTICAL LINING
ALUM	ALUMINUM
AMB	AMBIENT
AO	ANALOG OUTPUT
AP	ACCESS PANEL (IN CEILING OR WALL)
ARCH	ARCHITECTURAL
AUX	AUXILIARY CONTACT
AW	ACID WASTE DRAIN
AWV	ACID WASTE VENT
BDD	BACKDRAFT DAMPER
BD	BALANCE DAMPER
BF	BOTTOM FLAT
BFP	BACK FLOW PREVENTER
BFF	BELOW FINISHED FLOOR
BG	BLAST GATE
BHP	BRAKE HORSEPOWER
BK	BREAK (OPEN) CONTACT
BLDG	BUILDING
BOD	BOTTOM OF DUCT
BOP	BOTTOM OF PIPE
BTUH	BRITISH THERMAL UNITS PER HOUR
BV	BALANCE VALVE
C	COMMON
CA	COMPRESSED AIR
CD	CEILING DIFFUSER
CD	CONDENSATE DRAIN LINE
CC	COOLING COIL
CDA	CLEAN DRY AIR
CFF	CAP FOR FUTURE
CFM	CUBIC FEET OF AIR PER MINUTE
CHWR	CHILLED WATER RETURN
CHWS	CHILLED WATER SUPPLY
CI	DDC CONTACT INPUT
CKV	CHECK VALVE
CL	CENTERLINE
CLG	CEILING
CO	DDC CONTACT OUTPUT
CONC	CONCRETE
CONN	CONNECT, CONNECTION
CON'T	CONTINUATION
CTE	CONNECT TO EXISTING
CW	CITY WATER (DOMESTIC)
CWR	CONDENSER WATER RETURN
CWS	CONDENSER WATER SUPPLY
DA	DIRECT ACTING, DAMPER ACTUATOR
DB	DRY BULB TEMPERATURE
DDC	DIRECT DIGITAL CONTROL
DI	DIGITAL INPUT
DL	DOOR LOUVER
DN	DOWN
DO	DIGITAL OUTPUT
DP	DIFFERENTIAL PRESSURE
DPS	DIFFERENTIAL PRESSURE SWITCH
DPT	DIFFERENTIAL PRESSURE TRANSMITTER
DS	DISCONNECT SWITCH
DWG	DRAWING
EA	EXHAUST AIR OR EACH
EAD	EXHAUST AIR DAMPER
EAT	ENTERING AIR TEMPERATURE
EF	EXHAUST FAN
EFF	EFFICIENCY
EG	EXHAUST GRILLE
(EP)	EMERGENCY POWER
EQ	EQUAL
ER	EXHAUST REGISTER
ES	EMERGENCY SHOWER
ESE	EMERGENCY SHOWER & EYE WASH
EW	EMERGENCY EYE WASH
EWC	EVAPORATIVE WATER COOLER
EWT	ENTERING WATER TEMPERATURE
EXH	EXHAUST
(F)	FUTURE
FC	FAN COIL UNIT
FCV	FLOW CONTROL VALVE
FD	FIRE DAMPER
FF	FINISHED FLOOR
FLR	FLOOR
FM	FLOW METER
FMS	FLOW MEASURING STATION (AIR OR WATER MONITER)
FOB	FLAT ON BOTTOM
FOT	FLAT ON TOP
FPM	FEET PER MINUTE
FPS	FEET PER SECOND
FS	FLOW SWITCH, FLOOR SINK
FSD	FIRE/SMOKE DAMPER
FV	FACE VELOCITY
GA	GAUGE
GAL	GALLON
GALV	GALVANIZED
GE	GENERAL EXHAUST
GEF	GENERAL EXHAUST FAN
GPM	GALLONS PER MINUTE
GSM	GALVANIZED SHEET METAL
GYP	GYPSUM BOARD
HB	HOSE BIBB
HC	HEATING COIL
HOA	HAND-OFF AUTOMATIC SWITCH
HP	HORSEPOWER
HR	HOUR
HT	HEIGHT
HTG	HEATING
HVAC	HEATING, VENTILATING AND AIR CONDITIONING
HW	HOT WATER (DOMESTIC)
HWR	HEATING WATER RETURN
HWS	HEATING WATER SUPPLY
IN	INCH
IP	INTERFACE PANEL
KW, KWH	KILOWATT, KILOWATT HOUR
LAT	LEAVING AIR TEMPERATURE
LWT	LEAVING WATER TEMPERATURE
MA	MILLIAMPS
MAU	MAKE-UP AIR UNIT
MAV	MANUAL AIR VENT, W/3/8" COCK W/DISCHARGE TO DRAIN
MAX	MAXIMUM
MCC	MOTOR CONTROL CENTER
MD	MANUAL DAMPER
MECH	MECHANICAL
MFR	MANUFACTURER
MIN	MINIMUM
NC	NORMALLY CLOSED
NO	NORMALLY OPEN; NUMBER
NTS	NOT TO SCALE
OA	OUTSIDE AIR
OBD	OPPOSED BLADE DAMPER
OC	ON CENTER
PCHR	PRIMARY CHILLED WATER RETURN
PCHS	PRIMARY CHILLED WATER SUPPLY
PCV	PRESSURE CONTROL VALVE
PD	PRESSURE DROP
PF	PREFILTER
PG	PRESSURE GAUGE
PH	PREHEAT COIL
PLBG	PLUMBING
POC	POINT OF CONNECTION
PRV	PRESSURE REDUCING VALVE
PSI	POUNDS PER SQUARE INCH
RG	RETURN GRILLE
RH	RELATIVE HUMIDITY
RH	REHEAT COIL
RPM	REVOLUTIONS PER MINUTE
RR	RETURN REGISTER
RS	REFRIGERANT SUCTION
RV	RELIEF VALVE
S/S	START/STOP
SA	SUPPLY AIR
SCHED	SCHEDULE

ABBREVIATIONS (CON'T)

ABBREV	DESCRIPTION
SCHR	SECONDARY CHILLED WATER RETURN
SCHS	SECONDARY CHILLED WATER SUPPLY
SD	SMOKE DETECTOR
SD	SLOT DIFFUSER
SOV	SHUT OFF VALVE
SM	SHEET METAL
SP	STATIC PRESSURE OR SET POINT
SPEC	SPECIFICATION
SR	SUPPLY AIR REGISTER
SS	STAINLESS STEEL
STRUC	STRUCTURAL
SWE	SIDE WALL EXHAUST
SWR	SIDE WALL RETURN
SWS	SIDE WALL SUPPLY
SWT	SIDE WALL TRANSFER
SAD	SEE ARCHITECTURAL DRAWINGS
SCD	SEE CIVIL DRAWINGS
SED	SEE ELECTRICAL DRAWINGS
SPD	SEE PLUMBING DRAWINGS
SSD	SEE STRUCTURAL DRAWINGS
(T)	TEMPORARY
TB	TERMINAL BOX
TCP	TEMPERATURE CONTROL PANEL
TCV	TEMPERATURE CONTROL VALVE
TEMP	TEMPERATURE
TF	TOP FLAT
THERM	THERMOMETER
THRU	THROUGH
TS	TEMPERATURE SENSOR
T'STAT	THERMOSTAT
TYP	TYPICAL
UBC	UNIFORM BUILDING CODE
UMC	UNIFORM MECHANICAL CODE
UON	UNLESS OTHERWISE NOTED
UPC	UNIFORM PLUMBING CODE
VAC	VACUUM
VAV	VARIABLE AIR VOLUME
VD	VOLUME DAMPER
VFD	VARIABLE FREQUENCY DRIVE
VOC	VOLTILE ORGANIC COMPOUND
VOL	VOLUME
VTR	VENT THRU ROOF
W/	WITH
W/O	WITHOUT
WB	WET BULB TEMPERATURE
WF	WIDE FLANGE
SAD	SEE ARCHITECTURAL DRAWINGS
SCD	SEE CIVIL DRAWINGS
SED	SEE ELECTRICAL DRAWINGS
SSD	SEE STRUCTURAL DRAWINGS
SPD	SEE PLUMBING DRAWINGS
SFAD	SEE FIRE ALARM DRAWINGS

LEGEND

NOTE: SYMBOLS LISTED ARE FOR GENERAL USE, DEREGARD THOSE WHICH AE NOT USED.

SINGLE LINE	DOUBLE LINE	DESCRIPTION
20x12	20x12	FIRST DIMENSION DENOTES VIEW SHOWN; RECTANGULAR OR OVAL
R	R	RISE OR DROP IN DIRECTION OF ARROW, RECTANGULAR DUCT
D		TRANSITION, 18" MIN. LENGTH, 15° MAX. EACH SIDE. ROUND OR RECTANGULAR
20x12 AL	20x12 AL	ACOUSTICAL LINED DUCT, LIMIT AS SHOWN. DIMENSIONS ARE NET INSIDE
		RECTANGULAR TO ROUND TRANSITION
		90° ELL W/TURNING VANES
		45° HEEL TAKE-OFF FITTING, RECTANGULAR DUCT
		CONICAL OR FLARED SPIN-IN OR CONICAL TAP ON RECTANGULAR DUCT
18	18	18 INCH ROUND DUCT
R	R	RISE OR DROP IN DIRECTION OF ARROW, ROUND DUCT
D		ROUND DUCT ELBOW; R/D=1.5MIN.
		90° STRAIGHT TEE FITTING
		90° CONICAL TEE FITTING
		45° LATERAL FITTING
		45° CONICAL LATERAL FITTING
		DIVIDED FLOW FITTING
		Y – FITTING
		SUPPLY DUCT TURNING TOWARD
		SUPPLY DUCT TURNING AWAY
		RETURN DUCT TURNING TOWARD
		RETURN DUCT TURNING AWAY
		EXHAUST DUCT TURNING TOWARD
		EXHAUST DUCT TURNING AWAY
		ROUND DUCT TURNING TOWARD
		ROUND DUCT TURNING AWAY
		OVAL DUCT TURNING TOWARD
		OVAL DUCT TURNING AWAY
		BALANCE DAMPER OR VOLUME DAMPER
XX	XX	FIRE DAMPER (FD), FIRE SMOKE DAMPER (FSD), BLAST GATE (BG), VOLUME DAMPER (VD), BALANCE DAMPER (BD)
		SLOT DIFFUSER PLENUM
		CEILING SUPPLY DIFFUSER
		CEILING RETURN REGISTER OR GRILLE
		CEILING EXHAUST REGISTER OR GRILLE
		SUPPLY GRILLE
		RETURN OR EXHAUST GRILLE
		BALANCE DAMPER
		VAV/CAV TERMINAL UNIT, VAV/CAV WITH REHEAT
		PLENUM BOX DOWNSTREAM OF VAV/CAV

LEGEND

SYMBOL	DESCRIPTION
A / M1	SECTION A / SHEET M1
TB1-01	UNIT TYPE, FLOOR, AH UNIT NO.
M1	EQUIP. MARK NO. M1 / SEE EQUIP. SCHEDULE
1	REVISION
1	SHEET NOTE
20x18	INDICATES OVAL DUCT
WSG-1, 12x12 (550)	AIR OUTLET/INLET DEVICE DESIGNATION (TYPE (SEE SCHED), SIZE, CFM)
H	HUMIDISTAT
HS	HUMIDITY SENSOR
SD	SMOKE DETECTOR (DUCT OR AREA TYPE)
T	THERMOSTAT
TS	TEMPERATURE SENSOR
M	MAIN AIR, 20 PSIG
TS	TEMPERATURE SWITCH
PS	PRESSURE SENSOR
	POINT OF CONNECTION
M	MOTOR OPERATOR
	PUMP
	BALL VALVE
	BALANCE VALVE
	CIRCUIT SETTER
	BUTTERFLY VALVE
	CHECK VALVE – SWING TYPE
NS	CHECK VALVE – NON SLAM TYPE
	CONTROL VALVE (2-WAY), ⏀ ELECT.
	CONTROL VALVE (3-WAY), ⏀ ELECT.
S	SOLENOID VALVE
	TRIPLE DUTY VALVE
	GLOBE VALVE
	GATE VALVE
	PRESSURE REDUCING VALVE
	PRESSURE RELIEF VALVE
	MANUAL AIR VENT. W/3/8" COCK W/DISCHARGE TO DRAIN
	FLOW CONTROL VALVE – AUTOMATIC
	LOCKSHIELD GATE VALVE
	ANGLE VALVE
	DIAPHRAGM VALVE
	COCK VALVE
	PLUG VALVE
	STRAINER
	QUICK DISCONNECT
	SUCTION DIFFUSER
	BASKET STRAINER
	FLEXIBLE PIPE CONNECTION
	AUTOMATIC AIR VENT
	HOSE BIBB
	STRAINER W/ BLOW-OFF VALVE
	CONCENTRIC PIPE REDUCER
	ECCENTRIC PIPE REDUCER/TOP FLAT
	ECCENTRIC PIPE REDUCER/BOTTOM FLAT
	FILTER
P	PRESSURE GAUGE
	THERMOMETER
FS	FLOW SWITCH
	THERMOMETER SENSOR WELL
	UNION
	FLANGE
FM 101	FLOW METER
BFP	BACK FLOW PREVENTOR
FS	FLOW SWITCH
PS	PRESSURE SWITCH
M	WATER METER
MS	MOTOR STARTER
FT	FLOW TRANSMITTER
HT	HUMIDITY TRANSMITTER
TS	TEMPERATURE SENSOR – DUCT MOUNTED
HS	HUMIDITY SENSOR – DUCT MOUNTED
SD	SMOKE DETECTOR – DUCT MOUNTED
	PIPE ANCHOR
	PIPE CAP
	LINE CONTINUED
	LINE DOWN
	LINE UP
	LINE RISE OR DROP
	LINE BRANCH OFF FROM TOP
	LINE BRANCH OFF FROM BOTTOM
	LINE BRANCH OFF FROM SIDE
	SLOPE DOWN (DIRECTION OF ARROW)
	DIRECTION OF FLOW

GENERAL NOTES

1. THE ENTIRE MECHANICAL SYSTEMS, INSTALLATION AND TESTING MUST BE IN COMPLIANCE TO THE LIFE SAFETY REQUIREMENTS OF THE CALIFORNIA BUILDING CODE LATEST EDITION.
2. ALL WORK AND MATERIALS SHALL BE IN ACCORDANCE WITH THE SPECIFICATIONS AND DRAWINGS.
3. IN THE EVENT OF A DISCREPANCY BETWEEN CONTRACT DRAWINGS AND SPECIFICATIONS, THE MOST STRINGENT SHALL GOVERN.
4. ALL WORK SHALL BE IN ACCORDANCE WITH REQUIREMENTS OF GOVERNING STATE AND LOCAL FIRE AND BUILDING CODES, NFPA, AND OSHA, AS A MINIMUM.
5. INSTALL ALL PIPING AND DUCTWORK TO AVOID ARCHITECTURAL FRAMING, STRUCTURAL MEMBERS, AND OTHER OBSTRUCTIONS. COORDINATE PIPING AND DUCTWORK LOCATION WITH ALL APPLICABLE CONTRACT DRAWINGS PRIOR TO PLACING SLEEVES IN FLOORS OR WALLS.
6. INSTALL ALL PIPING AND DUCTWORK TO BEST SUIT FIELD CONDITIONS AND COORDINATE WITH THE INSTALLATION WORK OF OTHER TRADES. THE DRAWINGS ARE DIAGRAMMATIC AND SHALL NOT BE SCALED TO DETERMINE EXACT LOCATIONS OF PIPING OR DUCTWORK.
7. SEE ARCHITECTURAL REFLECTED CEILING PLANS TO COORDINATE EXACT DIFFUSER LOCATIONS IN FINISHED CEILING.
8. COORDINATE DUCTWORK, PIPING WITH STRUCTURAL DRAWINGS, LIGHTING, AUDIO VISUAL AND SPRINKLER SYSTEM. PROVIDE TRANSITIONS AS REQUIRED.
9. COORDINATE LOCATIONS OF ACCESS DOORS WITH F.D.'S, V.D.'S, SD, ETC. THE OPENING SHALL BE LARGE ENOUGH TO PERMIT MAINTENANCE AND RESETTING OF THE DEVICE.
10. CONTRACTOR SHALL COORDINATE WITH ARCHITECT CEILING ACCESS PANELS FOR ALL REQUIRED FIRE, SMOKE AND VOLUME DAMPERS IN INACCESSIBLE CEILING AS REQUIRED.
11. PROVIDE ALL MISCELLANEOUS STEEL, SPECIAL SUPPORTS AND ANCHORING FOR ALL MECHANICAL EQUIPMENT, DUCTWORK, AND PIPING SYSTEMS. REFER TO DIVISION 3 FOR CONCRETE PADS.
12. ALL DUCT DIMENSIONS ARE AIRSTREAM DIMENSIONS.
13. MECHANICAL CONTRACTOR SHALL PROVIDE SHIM TO LEVEL ALL EQUIPMENT ON THE FLOOR.
14. SEAL ALL FIRE RATED PENETRATIONS WITH FIRE RETARDANT MATERIAL AS SPECIFIED.
15. THERMOSTAT APPEARANCE SHALL BE COORDINATED WITH THE ARCHITECT/OWNER. MOUNTING HEIGHT AS INDICATED BY ARCHITECT.
16. PROVIDE REMOTE OPERATORS FOR ALL VOLUME DAMPERS LOCATED ABOVE INACCESSIBLE CEILING.
17. PROVIDE OPERATING HANDLES FOR ALL VALVES AND COCKS WITHOUT INTEGRAL OPERATORS.
18. PROVIDE VALVES AND OTHER PIPING SPECIALTIES SAME SIZE AS LINE SIZE SHOWN UNLESS OTHERWISE NOTED.
19. WATER PIPE CONNECTIONS TO AIR HEATING AND COOLING COILS SHALL BE MADE SO THERE WILL BE COUNTER FLOW BETWEEN WATER AND AIR.
20. PROVIDE 3/8" BLOW-OFF VALVE AND 1/2" IPS TO HOSE THREAD ADAPTER ON ALL STRAINERS.
21. ALL BRANCH DUCTS TO AIR OUTLET SHALL BE EQUIPPED WITH DUCT VOLUME DAMPER.
22. PROVIDE UNIONS OR FLANGES ON EACH SIDE OF CONTROL VALVES. EVERY PIPING ASSEMBLY SHALL BE MADE SO AS TO MAKE EVERY VALVE AND PIECE OF EQUIPMENT EASILY REMOVABLE. WELDED OR SOLDER-JOINT VALVES ARE EXCEPTED FROM THIS REQUIREMENT.
23. CEILING DIFFUSER SIZES SHOWN ON FLOOR PLANS ARE NECK SIZES.
24. PROVIDE LOCAL INDICATOR LIGHTS FOR ALL SMOKE/FIRE DAMPERS. RED LED LIGHT IS ACTIVATED WHEN DAMPER IS IN CLOSED POSITION.
25. PROVIDE MINIMUM 1" AIR GAP AT ALL DRAIN CONNECTIONS (SEE DETAILS).
26. DUCTS STORED ON THE CONSTRUCTION SITE SHALL BE PROTECTED AND ISOLATED FROM DUST CONTAMINATION.
27. AT CONTRACTOR DISCRETION HE MAY SUBSTITUTE RECTANGULAR DUCTWORK TO ROUND DUCTWORK, WHERE PHYSICAL OBSTRUCTIONS DO NOT INTERFERE. THE SUBSTITUTION WILL REQUIRE THE CONTRACTOR TO COORDINATE WITH ALL OTHER TRADES. DUCT PRESSURE DROPS AND VELOCITIES MAY NOT EXCEED THAT SHOWN ON BID DOCUMENTS.
28. ALL PIPING AND DUCTWORK SHALL BE CONNECTED TO COILS AND EQUIPMENT WITH FLEXIBLE CONNECTION.
29. PROVIDE MINIMUM 10'-0" OF 1" ACOUSTICALLY LINED DUCTWORK AT DISCHARGE OF EACH HEAT PUMPS UPSTREAM OF FIRST SUPPLY AIR DIFFUSER.
30. SEE ARCHITECTURAL DOCUMENTS FOR PAINTING OF ALL EXPOSED DUCTWORK, PIPING, AIR OUTLETS, FIXTURE TRIM, AND MECHANICAL EQUIPMENT.
31. INSTALL SHUT-OFF VALVES AT EACH BRANCH PIPE LINE.
32. ALL DUCT SMOKE DETECTORS SHALL BE FURNISHED AND WIRED (POWER, CONTROL, FIRE ALARM) BY DIVISION 16, INSTALLED BY DIVISION 15. DETECTOR SAMPLING TUBES SHALL HAVE AN ACCESS DOOR MAKING SAMPLING TUBES READILY ACCESSIBLE.
33. UNLESS SPECIFICALLY SPECIFIED OR SHOWN OTHERWISE ALL CONSTRUCTION SHALL CONFORM TO SMACNA HVAC CONSTRUCTION STANDARDS AS A MINIMUM REQUIREMENT. SPECIFIC DETAILS OR SPECIFICATIONS EXCEEDING SMACNA STANDARDS SHALL GOVERN.
34. FIRE DAMPERS AND FIRE SMOKE DAMPERS ARE TO BE INSTALLED IN RATED PORTIONS OF THE ASSEMBLIES IN WHICH THEY OCCUR AND SHALL BE INSTALLED PER NFPA 72.
35. REFER TO ARCHITECTURAL SPECIFICATION FOR APPROVED FIRESTOPPING SYSTEM.
36. ALL CONTROL PANELS SHALL BE MOUNTED NO LESS THAN 4 FEET ABOVE THE FINISHED FLOOR.
37. ALL PIPING NOTED TO BE CAPPED FOR FUTURE EXTENSION SHALL BE PROVIDED WITH VALVE NEAR CAP TO PERMIT FUTURE CONNECTION OF THE SYSTEM.
38. ALL PLENUM BOXES, DUCTWORK, ETC TO BE LOCATED INSIDE WALL CAVITIES OR INACCESSIBLE SPACES SHALL BE TESTED FOR AIRTIGHT CONSTRUCTION BEFORE INSTALLATION (TYPICAL).
39. ALL PIPING TO BE LOCATED INSIDE WALL CAVITIES OR INACCESSIBLE SPACES SHALL BE LEAK TESTED AND INSULATED WITH VAPOR BARRIER SEAL BEFORE INSTALLATION (TYPICAL).
40. CORE DRILL CONCRETE WALL FOR PIPE PENETRATIONS. DIAMETER OF WALL OPENING SHALL BE 2 INCHES LARGER THEN THE DIAMETER OF PIPE WITH INSULATION. SEAL ALL PENETRATIONS WITH UL APPROVED SEALANT. (REFER TO ARCHITECTURAL SPECIFICATIONS).
41. ALL WORK UNDER THIS DIVISION SHALL BE COORDINATED WITH OTHER TRADES.
42. PLUG OR CAP ACTIVE PIPING OR DUCTWORK BEHIND OR BELOW FINISH AS REQUIRED OR INDICATED. DO NOT LEAVE LONG DEAD-END BRANCHES EXCEPT VERTICAL CONDENSATE IN WALLS, CAP OR PLUG AS CLOSE AS POSSIBLE TO ACTIVE LINE.
43. DISCONNECT, REMOVE OR RELOCATE MATERIAL, EQUIPMENT, PLUMBING FIXTURES, PIPING AND OTHER WORK NOTED AND REQUIRED BY REMOVAL OR CHANGES IN EXISTING CONSTRUCTION.
44. ALL MATERIALS AND WORKMANSHIP ARE SUBJECT TO REVIEW AND APPROVAL BY THE ARCHITECT. ANY PORTION OF THE WORK FOUND TO BE DEFECTIVE SHALL BE REPLACED BY THE CONTRACTOR AS PART OF THIS CONTRACT AT NO ADDITIONAL COST TO THE OWNER.
45. NOT ALL DUCT AND PIPING TRANSITIONS AND/OR OFFSETS ARE SHOWN. PROVIDE TRANSITIONS AND/OR OFFSETS AT NO ADDITIONAL COST TO OWNER.
46. MAXIMUM LENGTH OF FLEXIBLE DUCTWORK IS 6'-0".
47. ALL AREA AND DUCT SMOKE DETECTORS SHALL BE INSTALLED PER NFPA 72.
48. DRAWINGS ARE DIAGRAMMATIC IN NATURE AND ALL CONDITIONS SHALL BE CONTRACTOR COODINATED AND VERIFIED FOR EXACT LOCATION AND SIZES. THE CONTRACTOR IS RESPONSIBLE TO THOROUGHLY VERIFY ALL COORDINATION REQUIREMENTS BEFORE SUBMITTING HIS BID.

GENERAL CONDITIONS

1. ALL WORK SHALL BE IN ACCORDANCE WITH REQUIREMENTS OF GOVERNING LOCAL FIRE CODES AND BUILDING CODES.
2. CONTRACTOR SHALL PROVIDE DUST COVERS AS REQUIRED TO CONTAIN DUST AND DEBRIS WITHIN CONSTRUCTION AREA AND KEEP DIRT AND DUST TO A MINIMUM.
3. CONTRACTOR SHALL ASSUME SOLE RESPONSIBILITY FOR SAFETY OF ALL PERSONS ON OR ABOUT THE CONSTRUCTION SITE IN ACCORDANCE WITH APPLICABLE LAWS AND CODES. GUARD ALL HAZARDS IN ACCORDANCE WITH THE SAFETY PROVISIONS OF THE LATEST MANUAL OF ACCIDENT PREVENTION PUBLISHED BY THE ASSOCIATED GENERAL CONTRACTORS OF AMERICA.
4. CLEAN ALL EXPOSED SURFACES AND NEW EQUIPMENT AFTER COMPLETION.
5. REPORT TO ARCHITECT, IN WRITING, CONDITIONS WHICH WILL PREVENT PROPER PROVISION OF THIS WORK PIOR TO BID SUBMITTAL.
6. THE SUBMISSION OF BID PROPOSAL SHALL BE CONSIDERED AS CONCLUSIVE EVIDENCE THAT THE CONTRACTOR IS THOROUGHLY FAMILIAR WITH THE INTENT OF THE CONTRACT DOCUMENTS AND SCOPE OF WORK. THE CONTRACTOR SHALL INCLUDE ALL LABOR AND MATERIAL REQUIRED FOR A COMPLETE AND OPERATIONAL SYSTEM.

DRAWING INDEX

SHEET NO	DESCRIPTION	DD	75% CD	DSA
M0.01	MECHANICAL LEGENDS, ABBREVIATIONS, & GENERAL NOTES	X	X	X
M0.02	MECHANICAL TITLE 24			X
M0.03	MECHANICAL TITLE 24			X
M0.04	MECHANICAL TITLE 24			X
M2.11	FIRST FLOOR MECHANICAL PLAN BUILDING A	X	X	X
M2.12	FIRST FLOOR MECHANICAL PLAN BUILDING B	X	X	X
M2.21	SECOND FLOOR MECHANICAL PLAN BUILDING A	X	X	X
M2.22	MECHANICAL ROOF PLAN BUILDING B	X	X	X
M2.31	MECHANICAL ROOF PLAN BUILDING A	X	X	X
MP2.11	FIRST FLOOR MECHANICAL PLAN BUILDING B	X	X	X
MP2.12	SECOND FLOOR MECHANICAL PLAN BUILDING A	X	X	X
MP2.21	MECHANICAL ROOF PLAN BUILDING B	X	X	X
MP2.22	MECHANICAL ROOF PLAN BUILDING A	X	X	X
M3.01	MECHANICAL SECTIONS BUILDING A		X	X
M3.02	MECHANICAL SECTIONS BUILDING B		X	X
M4.01	MECHANICAL SCHEDULES	X	X	X
M4.02	MECHANICAL SCHEDULES	X	X	X
M5.01	MECHANICAL PIPING DIAGRAMS	X	X	X
M6.01	MECHANICAL DETAILS	X	X	X
M6.02	MECHANICAL DETAILS	X	X	X
M6.03	MECHANICAL DETAILS	X	X	X
M6.04	MECHANICAL DETAILS		X	X
M6.05	MECHANICAL DETAILS		X	X
M7.01	MECHANICAL CONTROL DIAGRAMS	X	X	X
M7.02	MECHANICAL CONTROL DIAGRAMS	X	X	X

APPROVAL STAMP

IDENTIFICATION STAMP
DIVISION OF THE STATE ARCHITECT
APP 02- 107417
ACC FLS SS
DATE: 12/21/05

NO.	ISSUED FOR	DATE
1	DSA APPROVAL SET	12/08/05

REGISTERED PROFESSIONAL ENGINEER GEORGE E. ARELLANO No. M29691 Exp. 06-30-06 Mechanical STATE OF CALIFORNIA

Date Signed 12/06/05
CERTIFIED BY

K M D
KAPLAN McLAUGHLIN DIAZ
ARCHITECTURE PLANNING
222 VALLEJO SAN FRANCISCO, CA 94111
(415) 398-5191 FAX (415) 394-7158

ALFATECH
120 MONTGOMERY STREET, SUITE 715 415-403-3000
SAN FRANCISCO, CALIFORNIA 94104 FAX: 415-788-8040
SAN JOSE • NEW JERSEY • SINGAPORE • AUSTRALIA
AT Project No. 39421

SOLANO COMMUNITY COLLEGE

SCCD
VALLEJO CENTER
Contract # A003.6123.01.V1

PROJECT NO.	DATE
419-201	12-08-05

MECHANICAL LEGEND, ABBREVIATIONS, & GENERAL NOTES
AS BUILTS

M0.01

PLOT DATE:

COPYRIGHT © 2004 BY KMD (KAPLAN McLAUGHLIN DIAZ). ALL RIGHTS RESERVED.

PERFORMANCE CERTIFICATE OF COMPLIANCE Part 1 of 3 PERF-1

PROJECT NAME: Vallejo Center New Classroom Building		DATE: 7/15/2005
PROJECT ADDRESS: Northgate Business Park Parcel 8 Columbus Parkway Vallejo		Building Permit #
PRINCIPAL DESIGNER - ENVELOPE: Kaplan McLaughlin Diaz	TELEPHONE: (415) 398-5191	
DOCUMENTATION AUTHOR: EnergySoft, LLC	TELEPHONE: (415) 897-6400	Checked by/Date Enforcement Agency Use

GENERAL INFORMATION

DATE OF PLANS	BUILDING CONDITIONED FLOOR AREA	CLIMATE ZONE
5/26/05	38,453 Sq.Ft.	3

BUILDING TYPE: [X] NONRESIDENTIAL [ ] HIGH RISE RESIDENTIAL [ ] HOTEL/MOTEL GUEST ROOM

PHASE OF CONSTRUCTION: [X] NEW CONSTRUCTION [ ] ADDITION [ ] ALTERATION [ ] EXISTING + ADDITION

STATEMENT OF COMPLIANCE

This Certificate of Compliance lists the building features and performance specifications needed to comply with Title 24, Parts 1 and 6, of the State Building Code. This certificate applies only to a Building using the performance compliance approach.

DOCUMENTATION AUTHOR: Ted M. Tiffany SIGNATURE: [signature] DATE: 7/15/05

The Principal Designers hereby certify that the proposed building design represented in the construction documents and modelled for this permit application are consistent with all other forms and worksheets, specifications, and other calculations submitted with this permit application. The proposed building as designed meets the energy efficiency requirements of the State Building Code, Title 24, Part 6.

ENV. LTG. MECH.

[ ] [ ] [ ] 1. I hereby affirm that I am eligible under the provisions of Division 3 of the Business and Professions Code to sign this document as the person responsible for its preparation; and that I am licensed as a civil engineer, mechanical engineer, electrical engineer or architect.

[ ] [ ] [ ] 2. I affirm that I am eligible under the provisions of Division 3 of the Business and Professions Code Section 5537.2 or 6737.3 to sign this document as the person responsible for its preparation; and that I am a licensed contractor preparing documents for work that I have contracted to perform.

[ ] [ ] [ ] 3. I affirm that I am eligible under Division 3 of the Business and Professions Code to sign this document because it pertains to a structure or type of work described as exempt pusuant to Business and Professions Code Sections 5537, 5538, and 6737.1. (These sections of the Business and Professions Code ae printed in full in the Nonresidential Manual.)

ENVELOPE COMPLIANCE

Indicate location on plans of Note Block for Mandatory Measures

Required Forms: ENV-1

PRINCIPAL ENVELOPE DESIGNER - NAME: Kaplan McLaughlin Diaz SIGNATURE: [signature] LIC. NO.: C7256 DATE: 12/8/05

LIGHTING COMPLIANCE

Indicate location on plans of Note Block for Mandatory Measures

Required Forms: LTG-1, LTG-3

PRINCIPAL LIGHTING DESIGNER - NAME: Alfa Tech SIGNATURE: [signature] LIC. NO.: E10951 DATE: 12-6-05

MECHANICAL COMPLIANCE

Indicate location on plans of Note Block for Mandatory Measures

Required Forms: MECH-1, MECH-2, MECH-3

PRINCIPAL MECHANICAL DESIGNER - NAME: Alfa Tech SIGNATURE: [signature] LIC. NO.: M29691 DATE: 12-6-05

Run Initiation Time: 07/15/05 07:15:58 Run Code: 1121436958

PERFORMANCE CERTIFICATE OF COMPLIANCE Part 2 of 3 PERF-1

Vallejo Center New Classroom Building DATE 7/13/2005

ANNUAL SOURCE ENERGY USE SUMMARY (kBtu/sqft-yr)

ENERGY COMPONENT	Standard Design	Proposed Design	Compliance Margin
Space Heating	6.97	12.50	-5.53
Space Cooling	25.75	19.79	5.96
Indoor Fans	28.06	26.13	1.93
Heat Rejection	0.00	0.00	0.00
Pumps & Misc.	0.00	3.46	-3.46
Domestic Hot Water	9.73	8.03	1.71
Lighting	41.23	27.04	14.19
Receptacle	16.94	16.94	0.00
Process	27.52	27.52	0.00
TOTALS:	156.20	141.39	14.81
Percent better than Standard:		9.5	(11.5 excluding process)

BUILDING COMPLIES

GENERAL INFORMATION

Building Orientation	(North) 0 deg	Conditioned Floor Area	38,453 sqft.
Number of Stories	2	Unconditioned Floor Area	768 sqft.
Number of Systems	33	Conditioned Footprint Area	25,431 sqft.
Number of Zones	21		

	Orientation	Gross Area	Glazing Area	Glazing Ratio
Front Elevation	(North)	5,452 sqft.	2,337 sqft.	42.9
Left Elevation	(East)	3,275 sqft.	284 sqft.	8.7
Rear Elevation	(South)	6,870 sqft.	1,362 sqft.	19.8
Right Elevation	(West)	3,308 sqft.	253 sqft.	7.6
Total		18,905 sqft.	4,236 sqft.	22.4
Roof		25,413 sqft.	0 sqft.	0.0

	Standard	Proposed
Lighting Power Density	1.400 W/sqft.	0.918 W/sqft.
Prescriptive Env. Heat Loss	7,613 Btu/h	5,415 Btu/h
Prescriptive Env. Heat Gain	532,505 Btu/h-F	402,847 Btu/h-F

LEED ™ Energy & Atmosphere Credit

Savings vs. Title 24 [1] 13.25

Energy Performance Credit [2] 3 Points

1. excludes process and receptacle 2. see LEED table 8-c or 8-d

Remarks:

Run Initiation Time: 07/05/05 16:07:55 Run Code: 1120604875

PERFORMANCE CERTIFICATE OF COMPLIANCE Part 3 of 3 PERF-1

PROJECT NAME: Vallejo Center New Classroom Building DATE 7/13/2005

ZONE INFORMATION

System Name	Zone Name	Occupancy Type	Floor Area (sqft.)	Inst. LPD (W/sf) [1]	Port. LPD (W/sf) [1]	Cntrl. Credits (W/sf) [2]	Tailored LPD (W/sf) [3]	Proc. Loads (W/sf)
ACU (1-1/1-2)	1: Elec/Telecom Zone	Comp Bldg School	469	0.264	0.000			20.000
CRAC (1-2)	1: Server Room Zone	Comp Bldg School	345	0.539	0.000			50.000
RHP-B	1: Art Storage Zone	Comp Bldg School	1,590	2.347	0.000			
RHP-F (2)	1: Multi-Purpose Zone	Comp Bldg School	3,820	1.086	0.000			
RHP-F (5)	1: Lobby Zone	Comp Bldg School	2,434	0.662	0.000	0.041		
	1: Lobby/Lounge Zone	Comp Bldg School	1,378	0.836	0.000			
RHP-E	1: Lecture Hall Zone	Comp Bldg School	5,222	1.059	0.000	0.015		
RHP-F	2: Lobby Zone	Comp Bldg School	813	1.597	0.000			
RHP-F (3)	2: Sci Lab/Prep Zone	Comp Bldg School	4,408	0.830	0.000	0.076		
HP-G (4)	2: Classrooms Zone	Comp Bldg School	4,314	1.035	0.000	0.194		
HP-C (5)	2: Offices Zone	Comp Bldg School	3,546	0.866	0.000	0.106		
HP-C (1-10)	1: Tech Office Zone	Comp Bldg School	262	0.473	0.000			
HP-H (1-8/1-13)	1: Comp Lab Zone 2	Comp Bldg School	1,343	0.831	0.000	0.166		15.000
HP-G (1-9/1-12)	1: Comp Lab Zone 1	Comp Bldg School	1,046	1.067	0.000	0.213		15.000
HP-A (1-11)	1: Group Study Zone 2	Comp Bldg School	306	1.216	0.000	0.243		
HP-A (1-6)	1: Group Study Zone 1	Comp Bldg School	270	1.378	0.000	0.276		
HP-I (1-12)	1: Learning Lab Zone	Comp Bldg School	1,481	0.879	0.000	0.176		
HP-E (1-4/1-5/1-7)	1: Classrooms Zone	Comp Bldg School	4,267	0.880	0.000	0.144		
	Unconditioned Zone	Unconditioned	768	0.000	0.000			
HP-A (1-3)	1: Fin-Aid Office Zone	Comp Bldg School	220	1.691	0.000	0.338		

Notes: 1. See LTG-1 (items marked with asterisk, see LTG-2 by others) 2. See LTG-3 3. See LTG-4 — Items above require special documentation

EXCEPTIONAL CONDITIONS COMPLIANCE CHECKLIST

The local enforcement agency should pay special attention to the items specified in this checklist. These items require special written justification and documentation, and special verification to be used with the performance approach. The local enforcement agency determines the adequacy of the justification, and may reject a building or design that otherwise complies based on the adequacy of the special justification and documentation submitted.

	Plan	Field
The HVAC System "RHP-B" includes an Economizer. This system has a cooling output < 75,000 btuh or a supply cfm < 2500.		
The Cooling Tower "CT-1 BAC VFL072-310" includes a Variable Speed Drive on the fan motor.		
The Room "Unconditioned Area" has a Heating Indoor Design Temperature of 50 degrees F.		
The Room "Unconditioned Area" has a Cooling Indoor Design Temperature of 90 degrees F.		

The exceptional features listed in this performance approach application have specifically been reviewed. Adequate written justification and documentation for their use have been provided by the applicant.

Authorized Signature or Stamp ______________________

Run Initiation Time: 07/05/05 16:07:55 Run Code: 1120604875

PERFORMANCE CERTIFICATE OF COMPLIANCE Part 3 of 3 PERF-1

PROJECT NAME: Vallejo Center New Classroom Building DATE 7/13/2005

ZONE INFORMATION

System Name	Zone Name	Occupancy Type	Floor Area (sqft.)	Inst. LPD (W/sf) [1]	Port. LPD (W/sf) [1]	Cntrl. Credits (W/sf) [2]	Tailored LPD (W/sf) [3]	Proc. Loads (W/sf)
HP-B (1-1/1-2)	1: Admin Office Zone	Comp Bldg School	919	1.312	0.000	0.151		

Notes: 1. See LTG-1 (items marked with asterisk, see LTG-2 by others) 2. See LTG-3 3. See LTG-4 — Items above require special documentation

EXCEPTIONAL CONDITIONS COMPLIANCE CHECKLIST

The local enforcement agency should pay special attention to the items specified in this checklist. These items require special written justification and documentation, and special verification to be used with the performance approach. The local enforcement agency determines the adequacy of the justification, and may reject a building or design that otherwise complies based on the adequacy of the special justification and documentation submitted.

	Plan	Field

The exceptional features listed in this performance approach application have specifically been reviewed. Adequate written justification and documentation for their use have been provided by the applicant.

Authorized Signature or Stamp ______________________

Run Initiation Time: 07/05/05 16:07:55 Run Code: 1120604875

ENVELOPE COMPLIANCE SUMMARY Performance ENV-1

PROJECT NAME: Vallejo Center New Classroom Building DATE 7/13/2005

OPAQUE SURFACES

#	Surface Type	Framing Type	Area	U-Fac.	Act. Azm.	Tilt	Solar Gains Y	Solar Gains N	Form 3 Reference	Location / Comments
1	Demising	Metal	442	0.189	0	90		X	R-11 Metal Stud Wall	1: Elec/Telecom Zone (faces Unconditioned Area)
2	Wall	Metal	182	0.145	150	90	X		R-19 Metal Stud Wall	1: Elec/Telecom Zone
3	Wall	Metal	208	0.145	150	90	X		R-19 Metal Stud Wall	1: Server Room Zone
4	Roof	Metal	1,590	0.036	0	0	X		R-28 Built Up Roof	1: Art Storage Zone
5	Demising	Metal	220	0.189	0	90		X	R-11 Metal Stud Wall	1: Art Storage Zone (faces Unconditioned Area)
6	Wall	Metal	171	0.145	12	90	X		R-19 Metal Stud Wall	1: Art Storage Zone
7	Wall	Metal	282	0.145	102	90	X		R-19 Metal Stud Wall	1: Art Storage Zone
8	Door	None	48	0.581	102	90	X		Hollow Metal Door	1: Art Storage Zone
9	Wall	Metal	424	0.145	282	90	X		R-19 Metal Stud Wall	1: Art Storage Zone
10	Roof	Metal	3,820	0.036	0	0	X		R-28 Built Up Roof	1: Multi-Purpose Zone
11	Demising	Metal	120	0.189	0	90		X	R-11 Metal Stud Wall	1: Multi-Purpose Zone (faces Unconditioned Area)
12	Wall	Metal	558	0.145	102	90	X		R-19 Metal Stud Wall	1: Multi-Purpose Zone
13	Door	None	24	0.581	102	90	X		Hollow Metal Door	1: Multi-Purpose Zone
14	Wall	Metal	22	0.199	102	90	X		Spandrel Wall	1: Multi-Purpose Zone
15	Wall	Metal	870	0.145	192	90	X		R-19 Metal Stud Wall	1: Multi-Purpose Zone
16	Wall	Metal	424	0.145	282	90	X		R-19 Metal Stud Wall	1: Multi-Purpose Zone
17	Roof	Metal	322	0.036	0	0	X		R-28 Built Up Roof	1: Lobby Zone
18	Demising	Metal	871	0.189	0	90		X	R-11 Metal Stud Wall	1: Lobby Zone (faces Unconditioned Area)
19	Wall	Metal	48	0.145	352	90	X		R-19 Metal Stud Wall	1: Lobby Zone
20	Wall	Metal	338	0.145	150	90	X		R-19 Metal Stud Wall	1: Lobby Zone

FENESTRATION SURFACES

Site Assembled Glazing [ ] Check box if Building is >= 100,000 sqft of CFA and >= 10,000 sqft vertical glazing then NFRC Certification is required. Follow NFRC 100-SB Procedures and submit NFRC Label Certificate Form.

#	Type	Area	U-Fac.	Act. Azm.	SHGC	Glazing Type	Location / Comments
1	Window	49	0.570	12	0.42	Viracon VE-1-52	1: Art Storage Zone
2	Window	49	0.570	282	0.42	Viracon VE-1-52	1: Art Storage Zone
3	Window	43	0.570	102	0.42	Viracon VE-1-52	1: Multi-Purpose Zone
4	Window	43	0.570	102	0.42	Viracon VE-1-52	1: Multi-Purpose Zone
5	Window	60	0.570	192	0.42	Viracon VE-1-52	1: Multi-Purpose Zone
6	Window	56	0.570	352	0.42	Viracon VE-1-52	1: Lobby Zone
7	Window	66	0.570	283	0.42	Viracon VE-1-52	1: Lobby Zone
8	Window	688	0.570	0	0.42	Viracon VE-1-52	1: Lobby/Lounge Zone
9	Window	510	0.570	180	0.42	Viracon VE-1-52	1: Lobby/Lounge Zone
10	Window	202	0.570	45	0.42	Viracon VE-1-52	1: Lecture Hall Zone
11	Window	48	0.570	287	0.42	Viracon VE-1-52	1: Lecture Hall Zone
12	Window	56	0.570	352	0.42	Viracon VE-1-52	2: Lobby Zone
13	Window	24	0.570	240	0.42	Viracon VE-1-52	2: Lobby Zone
14	Window	66	0.570	283	0.42	Viracon VE-1-52	2: Lobby Zone
15	Window	288	0.570	150	0.42	Viracon VE-1-52	2: Sci Lab/Prep Zone

EXTERIOR SHADING

#	Exterior Shade Type	SHGC	Window Hgt.	Window Wd.	Overhang Len.	Overhang Hgt.	Overhang LExt.	Overhang RExt.	Left Fin Dist.	Left Fin Len.	Left Fin Hgt.	Right Fin Dist.	Right Fin Len.	Right Fin Hgt.
1	None	0.76												
2	None	0.76												
3	None	0.76												
4	None	0.76												
5	None	0.76												
6	None	0.76												
7	None	0.76												
8	None	0.76												
9	None	0.76	10.0	51.0	3.0	0.1	1.0	1.0						
10	None	0.76												
11	None	0.76												
12	None	0.76												
13	None	0.76												
14	None	0.76												
15	None	0.76												

Run Initiation Time: 07/05/05 16:07:55 Run Code: 1120604875

ENVELOPE COMPLIANCE SUMMARY Performance ENV-1

PROJECT NAME: Vallejo Center New Classroom Building DATE 7/13/2005

OPAQUE SURFACES

#	Surface Type	Framing Type	Area	U-Fac.	Act. Azm.	Tilt	Solar Gains Y	Solar Gains N	Form 3 Reference	Location / Comments
21	Wall	Metal	568	0.145	240	90	X		R-19 Metal Stud Wall	1: Lobby Zone
22	Wall	Metal	142	0.145	283	90	X		R-19 Metal Stud Wall	1: Lobby Zone
23	Roof	Metal	1,378	0.036	0	0	X		R-28 Built Up Roof	1: Lobby/Lounge Zone
24	Wall	Metal	148	0.145	0	90	X		R-19 Metal Stud Wall	1: Lobby/Lounge Zone
25	Wall	Metal	480	0.145	180	90	X		R-19 Metal Stud Wall	1: Lobby/Lounge Zone
26	Roof	Metal	5,222	0.036	0	0	X		R-28 Built Up Roof	1: Lecture Hall Zone
27	Wall	Metal	264	0.145	17	90	X		R-19 Metal Stud Wall	1: Lecture Hall Zone
28	Wall	Metal	292	0.145	45	90	X		R-19 Metal Stud Wall	1: Lecture Hall Zone
29	Wall	Metal	23	0.199	45	90	X		Spandrel Wall	1: Lecture Hall Zone
30	Wall	Metal	396	0.145	60	90	X		R-19 Metal Stud Wall	1: Lecture Hall Zone
31	Wall	Metal	55	0.145	197	90	X		R-19 Metal Stud Wall	1: Lecture Hall Zone
32	Wall	Metal	564	0.145	287	90	X		R-19 Metal Stud Wall	1: Lecture Hall Zone
33	Door	None	48	0.581	287	90	X		Hollow Metal Door	1: Lecture Hall Zone
34	Roof	Metal	813	0.036	0	0	X		R-28 Built Up Roof	2: Lobby Zone
35	Demising	Metal	338	0.189	0	90		X	R-11 Metal Stud Wall	2: Lobby Zone (faces Unconditioned Area)
36	Wall	Metal	48	0.145	352	90	X		R-19 Metal Stud Wall	2: Lobby Zone
37	Wall	Metal	429	0.145	150	90	X		R-19 Metal Stud Wall	2: Lobby Zone
38	Wall	Metal	522	0.145	240	90	X		R-19 Metal Stud Wall	2: Lobby Zone
39	Wall	Metal	142	0.145	283	90	X		R-19 Metal Stud Wall	2: Lobby Zone
40	Roof	Metal	4,408	0.036	0	0	X		R-28 Built Up Roof	2: Sci Lab/Prep Zone

FENESTRATION SURFACES

Site Assembled Glazing [ ] Check box if Building is >= 100,000 sqft of CFA and >= 10,000 sqft vertical glazing then NFRC Certification is required. Follow NFRC 100-SB Procedures and submit NFRC Label Certificate Form.

#	Type	Area	U-Fac.	Act. Azm.	SHGC	Glazing Type	Location / Comments
16	Window	126	0.570	324	0.42	Viracon VE-1-52	2: Classrooms Zone
17	Window	72	0.570	60	0.42	Viracon VE-1-52	2: Classrooms Zone
18	Window	276	0.570	150	0.42	Viracon VE-1-52	2: Classrooms Zone
19	Window	441	0.570	330	0.42	Viracon VE-1-52	2: Offices Zone
20	Window	180	0.570	340	0.42	Viracon VE-1-52	2: Offices Zone
21	Window	96	0.570	60	0.42	Viracon VE-1-52	1: Comp Lab Zone 2
22	Window	57	0.570	150	0.42	Viracon VE-1-52	1: Comp Lab Zone 2
23	Window	30	0.570	60	0.42	Viracon VE-1-52	1: Comp Lab Zone 1
24	Window	57	0.570	150	0.42	Viracon VE-1-52	1: Comp Lab Zone 1
25	Window	192	0.570	330	0.42	Viracon VE-1-52	1: Learning Lab Zone
26	Window	96	0.570	330	0.42	Viracon VE-1-52	1: Classrooms Zone
27	Window	50	0.570	340	0.42	Viracon VE-1-52	1: Classrooms Zone
28	Window	105	0.570	340	0.42	Viracon VE-1-52	1: Classrooms Zone
29	Window	114	0.570	150	0.42	Viracon VE-1-52	1: Classrooms Zone
30	Window	24	0.570	330	0.42	Viracon VE-1-52	1: Admin Office Zone

EXTERIOR SHADING

#	Exterior Shade Type	SHGC	Window Hgt.	Window Wd.	Overhang Len.	Overhang Hgt.	Overhang LExt.	Overhang RExt.	Left Fin Dist.	Left Fin Len.	Left Fin Hgt.	Right Fin Dist.	Right Fin Len.	Right Fin Hgt.
16	None	0.76												
17	None	0.76												
18	None	0.76												
19	None	0.76												
20	None	0.76												
21	None	0.76												
22	None	0.76												
23	None	0.76												
24	None	0.76												
25	None	0.76												
26	None	0.76												
27	None	0.76												
28	None	0.76												
29	None	0.76												
30	None	0.76												

Run Initiation Time: 07/05/05 16:07:55 Run Code: 1120604875

ENVELOPE COMPLIANCE SUMMARY Performance ENV-1

PROJECT NAME: Vallejo Center New Classroom Building DATE 7/13/2005

OPAQUE SURFACES

#	Surface Type	Framing Type	Area	U-Fac.	Act. Azm.	Tilt	Solar Gains Y	Solar Gains N	Form 3 Reference	Location / Comments
41	Demising	Metal	104	0.189	0	90		X	R-11 Metal Stud Wall	2: Sci Lab/Prep Zone (faces Unconditioned Area)
42	Wall	Metal	882	0.145	150	90	X		R-19 Metal Stud Wall	2: Sci Lab/Prep Zone
43	Roof	Metal	4,314	0.036	0	0	X		R-28 Built Up Roof	2: Classrooms Zone
44	Demising	Metal	273	0.189	0	90		X	R-11 Metal Stud Wall	2: Classrooms Zone (faces Unconditioned Area)
45	Wall	Metal	225	0.145	324	90	X		R-19 Metal Stud Wall	2: Classrooms Zone
46	Wall	Metal	52	0.145	330	90	X		R-19 Metal Stud Wall	2: Classrooms Zone
47	Wall	Metal	838	0.145	60	90	X		R-19 Metal Stud Wall	2: Classrooms Zone
48	Wall	Metal	712	0.145	150	90	X		R-19 Metal Stud Wall	2: Classrooms Zone
49	Floor	None	39	0.044	0	180		X	Raised Slab Floor	2: Classrooms Zone
50	Roof	Metal	3,546	0.036	0	0	X		R-28 Built Up Roof	2: Offices Zone
51	Demising	Metal	156	0.189	0	90		X	R-11 Metal Stud Wall	2: Offices Zone (faces Unconditioned Area)
52	Wall	Metal	767	0.145	330	90	X		R-19 Metal Stud Wall	2: Offices Zone
53	Wall	Metal	21	0.199	330	90	X		Spandrel Wall	2: Offices Zone
54	Wall	Metal	106	0.145	340	90	X		R-19 Metal Stud Wall	2: Offices Zone
55	Wall	Metal	13	0.145	60	90	X		R-19 Metal Stud Wall	2: Offices Zone
56	Wall	Metal	13	0.145	240	90	X		R-19 Metal Stud Wall	2: Offices Zone
57	Wall	Metal	65	0.145	260	90	X		R-19 Metal Stud Wall	2: Offices Zone
58	Floor	None	20	0.044	0	180		X	Raised Slab Floor	2: Offices Zone
59	Wall	Metal	203	0.145	60	90	X		R-19 Metal Stud Wall	1: Comp Lab Zone 2
60	Wall	Metal	430	0.145	150	90	X		R-19 Metal Stud Wall	1: Comp Lab Zone 2

FENESTRATION SURFACES

Site Assembled Glazing [ ] Check box if Building is >= 100,000 sqft of CFA and >= 10,000 sqft vertical glazing then NFRC Certification is required. Follow NFRC 100-SB Procedures and submit NFRC Label Certificate Form.

#	Type	Area	U-Fac.	Act. Azm.	SHGC	Glazing Type	Location / Comments
31	Window	72	0.570	330	0.42	Viracon VE-1-52	1: Admin Office Zone

EXTERIOR SHADING

#	Exterior Shade Type	SHGC	Window Hgt.	Window Wd.	Overhang Len.	Overhang Hgt.	Overhang LExt.	Overhang RExt.	Left Fin Dist.	Left Fin Len.	Left Fin Hgt.	Right Fin Dist.	Right Fin Len.	Right Fin Hgt.
31	None	0.76												

Run Initiation Time: 07/05/05 16:07:55 Run Code: 1120604875

ENVELOPE COMPLIANCE SUMMARY Performance ENV-1

PROJECT NAME: Vallejo Center New Classroom Building DATE 7/13/2005

OPAQUE SURFACES

#	Surface Type	Framing Type	Area	U-Fac.	Act. Azm.	Tilt	Solar Gains Y	Solar Gains N	Form 3 Reference	Location / Comments
61	Door	None	27	0.581	150	90	X		Hollow Metal Door	1: Comp Lab Zone 2
62	Demising	Metal	273	0.189	0	90		X	R-11 Metal Stud Wall	1: Comp Lab Zone 1 (faces Unconditioned Area)
63	Wall	Metal	184	0.145	60	90	X		R-19 Metal Stud Wall	1: Comp Lab Zone 1
64	Wall	Metal	20	0.199	60	90	X		Spandrel Wall	1: Comp Lab Zone 1
65	Wall	Metal	202	0.145	150	90	X		R-19 Metal Stud Wall	1: Comp Lab Zone 1
66	Door	None	27	0.581	150	90	X		Hollow Metal Door	1: Comp Lab Zone 1
67	Wall	Metal	221	0.145	60	90	X		R-19 Metal Stud Wall	1: Group Study Zone 2
68	Wall	Metal	198	0.145	330	90	X		R-19 Metal Stud Wall	1: Learning Lab Zone
69	Wall	Metal	90	0.145	60	90	X		R-19 Metal Stud Wall	1: Learning Lab Zone
70	Door	None	27	0.581	60	90	X		Hollow Metal Door	1: Learning Lab Zone
71	Demising	Metal	429	0.189	0	90		X	R-11 Metal Stud Wall	1: Classrooms Zone (faces Unconditioned Area)
72	Wall	Metal	327	0.145	330	90	X		R-19 Metal Stud Wall	1: Classrooms Zone
73	Wall	Metal	118	0.145	340	90	X		R-19 Metal Stud Wall	1: Classrooms Zone
74	Wall	Metal	13	0.145	60	90	X		R-19 Metal Stud Wall	1: Classrooms Zone
75	Wall	Metal	612	0.145	150	90	X		R-19 Metal Stud Wall	1: Classrooms Zone
76	Door	None	54	0.581	150	90	X		Hollow Metal Door	1: Classrooms Zone
77	Wall	Metal	13	0.145	240	90	X		R-19 Metal Stud Wall	1: Classrooms Zone
78	Wall	Metal	307	0.145	330	90	X		R-19 Metal Stud Wall	1: Admin Office Zone
79	Wall	Metal	52	0.145	60	90	X		R-19 Metal Stud Wall	1: Admin Office Zone
80	Wall	Metal	65	0.145	240	90	X		R-19 Metal Stud Wall	1: Admin Office Zone

FENESTRATION SURFACES

Site Assembled Glazing [ ] Check box if Building is >= 100,000 sqft of CFA and >= 10,000 sqft vertical glazing then NFRC Certification is required. Follow NFRC 100-SB Procedures and submit NFRC Label Certificate Form.

#	Type	Area	U-Fac.	Act. Azm.	SHGC	Glazing Type	Location / Comments

EXTERIOR SHADING

#	Exterior Shade Type	SHGC	Window Hgt.	Window Wd.	Overhang Len.	Overhang Hgt.	Overhang LExt.	Overhang RExt.	Left Fin Dist.	Left Fin Len.	Left Fin Hgt.	Right Fin Dist.	Right Fin Len.	Right Fin Hgt.

Run Initiation Time: 07/05/05 16:07:55 Run Code: 1120604875

APPROVAL STAMP

IDENTIFICATION STAMP
DIVISION OF THE STATE ARCHITECT
APPL 02- 107417
AC [signature] FLS TH SS NL
DATE: 12/21/05

NO.	ISSUED FOR	DATE
1	DSA APPROVAL SET	12/08/05

REGISTERED PROFESSIONAL ENGINEER GEORGE L. ARELLANO No. M29691 Exp. 06-30-06 Mechanical STATE OF CALIFORNIA

Date Signed 12/06/05

CERTIFIED BY

K M D
KAPLAN McLAUGHLIN DIAZ
ARCHITECTURE PLANNING
222 VALLEJO SAN FRANCISCO, CA 94111
(415) 398-5191 FAX (415) 394-7158

ALFATECH
120 MONTGOMERY STREET, SUITE 715 415-403-3000
SAN FRANCISCO, CALIFORNIA 94104 FAX: 415-788-6040
SAN JOSE • NEW JERSEY • SINGAPORE • AUSTRALIA
AT Project No. 204231

SOLANO COMMUNITY COLLEGE

SCCD
VALLEJO CENTER
Contract # A003.6123.01.V1

PROJECT NO.	DATE
419-201	12-08-05

MECHANICAL
TITLE 24
AS BUILTS

M0.02

PLOT DATE:

COPYRIGHT © 2004 BY KMD (KAPLAN McLAUGHLIN DIAZ). ALL RIGHTS RESERVED.

ENVELOPE COMPLIANCE SUMMARY — Performance ENV-1

PROJECT NAME: Vallejo Center New Classroom Building — DATE: 7/13/2005

OPAQUE SURFACES

#	Surface Type	Framing Type	Area	U-Fac.	Act. Azm.	Tilt	Solar Gains Y/N	Form 3 Reference	Location / Comments
81	Wall	Metal	65	0.145	260	90	X	R-19 Metal Stud Wall	1: Admin Office Zone

FENESTRATION SURFACES

Site Assembled Glazing ☐ Check box if Building is >= 100,000 sqft of CFA and >= 10,000 sqft vertical glazing then NFRC Certification is required. Follow NFRC 100-SB Procedures and submit NFRC Label Certificate Form.

#	Type	Area	U-Fac.	Act. Azm.	SHGC	Glazing Type	Location / Comments

EXTERIOR SHADING

#	Exterior Shade Type	SHGC	Window Hgt. Wd.	Overhang Len. Hgt. LExt. RExt.	Left Fin Dist. Len. Hgt.	Right Fin Dist. Len. Hgt.

Run Initiation Time: 07/05/05 16:07:55 Run Code: 1120604875

CERTIFICATE OF COMPLIANCE — Performance MECH-1

PROJECT NAME: Vallejo Center New Classroom Building — DATE: 7/13/2005

SYSTEM FEATURES

SYSTEM NAME	Cooling Tower	DHW Heater	ACU (1-1/1-2)	NOTE TO FIELD
TIME CONTROL	n/a	n/a	Programmable Switch	
SETBACK CONTROL	n/a	n/a	Heating Required	
ISOLATION ZONES	n/a	n/a	n/a	
HEAT PUMP THERMOSTAT?	n/a	n/a	n/a	
ELECTRIC HEAT?	n/a	n/a	n/a	
FAN CONTROL	n/a	n/a	Constant Volume	
VAV MINIMUM POSITION CONTROL?	n/a	n/a	No	
SIMULTANEOUS HEAT/COOL?	n/a	n/a	No	
HEATING SUPPLY RESET	n/a	n/a	Constant Temp	
COOLING SUPPLY RESET	Wetbulb-Reset	n/a	Constant Temp	
HEAT REJECTION CONTROL	Variable-Speed-Fan	n/a	n/a	
VENTILATION	n/a	n/a	Air Balance	
OUTDOOR DAMPER CONTROL	n/a	n/a	Auto	
ECONOMIZER TYPE	n/a	n/a	No Economizer	
DESIGN O.A. CFM (MECH-3, COLUMN I)	n/a	n/a	150 cfm	
HEATING EQUIPMENT TYPE	n/a	Gas Fired	None	
HEATING EQUIPMENT EFFICIENCY	n/a	97	n/a	
COOLING EQUIPMENT TYPE	Tower w/30.0 bhp fan	n/a	Split DX	
COOLING EQUIPMENT EFFICIENCY	14 F App	n/a	10.0 SEER / 10.5 EER	
MAKE AND MODEL NUMBER	CT-1 BAC VFL072-310	CLEAVER-BROOKS MCF-1500	ACU 1-1 & 1-2	
PIPE INSULATION REQUIRED?	No	Yes	Yes	
PIPE/DUCT INSULATION PROTECTED?	n/a	Yes	Yes	
HEATING DUCT LOCATION / R-VALUE	n/a / n/a	n/a / n/a	Ducts in Attic / 4.2	
COOLING DUCT LOCATION / R-VALUE	n/a / n/a	n/a / n/a	Ducts in Attic / 4.2	
VERIFIED SEALED DUCTS IN CEILING/ROOF SPACE	n/a	n/a	No	

CODE TABLES: Enter code from table below into columns above.

HEAT PUMP THERMOSTAT? / ELECTRIC HEAT? / VAV MINIMUM POSITION CONTROL? / SIMULTANEOUS HEAT / COOL? / HEAT AND COOL SUPPLY RESET? / HIGH EFFICIENCY? / PIPE INSULATION REQUIRED? / PIPE/DUCT INSULATION PROTECTED? / SEALED DUCTS IN CEILING/ROOF SPACE?	Y: Yes N: No
TIME CONTROL	S: Prog. Switch O: Occupancy Sensor M: Manual Timer
SETBACK CTRL.	H: Heating C: Cooling B: Both
ISOLATION ZONES	Enter Number of Isolation Zones.
FAN CONTROL	I: Inlet Vanes P: Variable Pitch V: VFD O: Other C: Curve
VENTILATION	B: Air Balance C: Outside Air Cert. M: Out. Air Measure D: Demand Control N: Natural
OUTDOOR DAMPER	A: Auto G: Gravity
ECONOMIZER	A: Air W: Water N: Not Required EC: Economizer Control See Section 144(e)3
O.A. CFM	Enter Outdoor Air CFM. Note: This shall be no less than Col. H on MECH-3.

NOTES TO FIELD — For Building Department Use Only

Run Initiation Time: 07/05/05 16:07:55 Run Code: 1120604875

CERTIFICATE OF COMPLIANCE — Performance MECH-1

PROJECT NAME: Vallejo Center New Classroom Building — DATE: 7/13/2005

SYSTEM FEATURES

SYSTEM NAME	CRAC (1-2)	RHP-B	RHP-F (2)	NOTE TO FIELD
TIME CONTROL	Programmable Switch	Programmable Switch	Programmable Switch	
SETBACK CONTROL	Heating Required	Heating Required	Heating Required	
ISOLATION ZONES	n/a	n/a	n/a	
HEAT PUMP THERMOSTAT?	n/a	Yes	Yes	
ELECTRIC HEAT?	n/a	0.0 kW	0.0 kW	
FAN CONTROL	Constant Volume	Constant Volume	Constant Volume	
VAV MINIMUM POSITION CONTROL?	No	No	No	
SIMULTANEOUS HEAT/COOL?	No	No	No	
HEATING SUPPLY RESET	Constant Temp	Constant Temp	Constant Temp	
COOLING SUPPLY RESET	Constant Temp	Constant Temp	Constant Temp	
HEAT REJECTION CONTROL	n/a	n/a	n/a	
VENTILATION	Air Balance	Air Balance	Air Balance	
OUTDOOR DAMPER CONTROL	Auto	Auto	Auto	
ECONOMIZER TYPE	No Economizer	Fixed Temp (Integrated)	Fixed Temp (Integrated)	
DESIGN O.A. CFM (MECH-3, COLUMN I)	110 cfm	509 cfm	1222 cfm	
HEATING EQUIPMENT TYPE	None	Heat Pump	Heat Pump	
HEATING EQUIPMENT EFFICIENCY	n/a	5.00 COP	4.10 COP	
COOLING EQUIPMENT TYPE	Split DX	Hydronic Heat Pump	Hydronic Heat Pump	
COOLING EQUIPMENT EFFICIENCY	10.0 SEER / 9.0 EER	14.7 EER	13.5 EER	
MAKE AND MODEL NUMBER	CRAC 1&2	RHP-B	RHP-F	
PIPE INSULATION REQUIRED?	Yes	Yes	Yes	
PIPE/DUCT INSULATION PROTECTED?	Yes	Yes	Yes	
HEATING DUCT LOCATION / R-VALUE	Ducts in Attic / 4.2	Ducts in Attic / 4.2	Ducts in Attic / 4.2	
COOLING DUCT LOCATION / R-VALUE	Ducts in Attic / 4.2	Ducts in Attic / 4.2	Ducts in Attic / 4.2	
VERIFIED SEALED DUCTS IN CEILING/ROOF SPACE	No	No	No	

CODE TABLES: Enter code from table below into columns above. (HEAT PUMP THERMOSTAT? … SEALED DUCTS IN CEILING/ROOF SPACE? Y: Yes N: No; TIME CONTROL S: Prog. Switch O: Occupancy Sensor M: Manual Timer; SETBACK CTRL. H: Heating C: Cooling B: Both; ISOLATION ZONES Enter Number of Isolation Zones.; FAN CONTROL I: Inlet Vanes P: Variable Pitch V: VFD O: Other C: Curve; VENTILATION B: Air Balance C: Outside Air Cert. M: Out. Air Measure D: Demand Control N: Natural; OUTDOOR DAMPER A: Auto G: Gravity; ECONOMIZER A: Air W: Water N: Not Required EC: Economizer Control See Section 144(e)3; O.A. CFM Enter Outdoor Air CFM. Note: This shall be no less than Col. H on MECH-3.)

NOTES TO FIELD — For Building Department Use Only

Run Initiation Time: 07/05/05 16:07:55 Run Code: 1120604875

CERTIFICATE OF COMPLIANCE — Performance MECH-1

PROJECT NAME: Vallejo Center New Classroom Building — DATE: 7/13/2005

SYSTEM FEATURES

SYSTEM NAME	RHP-F (5)	RHP-E	RHP-F	NOTE TO FIELD
TIME CONTROL	Programmable Switch	Programmable Switch	Programmable Switch	
SETBACK CONTROL	Heating Required	Heating Required	Heating Required	
ISOLATION ZONES	n/a	n/a	n/a	
HEAT PUMP THERMOSTAT?	Yes	Yes	Yes	
ELECTRIC HEAT?	0.0 kW	0.0 kW	0.0 kW	
FAN CONTROL	Constant Volume	Constant Volume	Constant Volume	
VAV MINIMUM POSITION CONTROL?	No	No	No	
SIMULTANEOUS HEAT/COOL?	No	No	No	
HEATING SUPPLY RESET	Constant Temp	Constant Temp	Constant Temp	
COOLING SUPPLY RESET	Constant Temp	Constant Temp	Constant Temp	
HEAT REJECTION CONTROL	n/a	n/a	n/a	
VENTILATION	Air Balance	Air Balance	Air Balance	
OUTDOOR DAMPER CONTROL	Auto	Auto	Auto	
ECONOMIZER TYPE	Fixed Temp (Integrated)	Fixed Temp (Integrated)	Fixed Temp (Integrated)	
DESIGN O.A. CFM (MECH-3, COLUMN I)	1220 cfm	1671 cfm	260 cfm	
HEATING EQUIPMENT TYPE	Heat Pump	Heat Pump	Heat Pump	
HEATING EQUIPMENT EFFICIENCY	4.10 COP	4.60 COP	4.10 COP	
COOLING EQUIPMENT TYPE	Hydronic Heat Pump	Hydronic Heat Pump	Hydronic Heat Pump	
COOLING EQUIPMENT EFFICIENCY	13.5 EER	14.6 EER	13.5 EER	
MAKE AND MODEL NUMBER	RHP-F	RHP-E	RHP-F	
PIPE INSULATION REQUIRED?	Yes	Yes	Yes	
PIPE/DUCT INSULATION PROTECTED?	Yes	Yes	Yes	
HEATING DUCT LOCATION / R-VALUE	Ducts in Attic / 4.2	Ducts in Attic / 4.2	Ducts in Attic / 4.2	
COOLING DUCT LOCATION / R-VALUE	Ducts in Attic / 4.2	Ducts in Attic / 4.2	Ducts in Attic / 4.2	
VERIFIED SEALED DUCTS IN CEILING/ROOF SPACE	No	No	No	

CODE TABLES: Enter code from table below into columns above. (same code tables as above)

NOTES TO FIELD — For Building Department Use Only

Run Initiation Time: 07/05/05 16:07:55 Run Code: 1120604875

CERTIFICATE OF COMPLIANCE — Performance MECH-1

PROJECT NAME: Vallejo Center New Classroom Building — DATE: 7/13/2005

SYSTEM FEATURES

SYSTEM NAME	RHP-F (3)	HP-G (4)	HP-C (5)	NOTE TO FIELD
TIME CONTROL	Programmable Switch	Programmable Switch	Programmable Switch	
SETBACK CONTROL	Heating Required	Heating Required	Heating Required	
ISOLATION ZONES	n/a	n/a	n/a	
HEAT PUMP THERMOSTAT?	Yes	Yes	Yes	
ELECTRIC HEAT?	0.0 kW	0.0 kW	0.0 kW	
FAN CONTROL	Constant Volume	Constant Volume	Constant Volume	
VAV MINIMUM POSITION CONTROL?	No	No	No	
SIMULTANEOUS HEAT/COOL?	No	No	No	
HEATING SUPPLY RESET	Constant Temp	Constant Temp	Constant Temp	
COOLING SUPPLY RESET	Constant Temp	Constant Temp	Constant Temp	
HEAT REJECTION CONTROL	n/a	n/a	n/a	
VENTILATION	Air Balance	Air Balance	Air Balance	
OUTDOOR DAMPER CONTROL	Auto	Auto	Auto	
ECONOMIZER TYPE	Fixed Temp (Integrated)	No Economizer	No Economizer	
DESIGN O.A. CFM (MECH-3, COLUMN I)	1411 cfm	1380 cfm	1135 cfm	
HEATING EQUIPMENT TYPE	Heat Pump	Heat Pump	Heat Pump	
HEATING EQUIPMENT EFFICIENCY	4.10 COP	5.20 COP	5.30 COP	
COOLING EQUIPMENT TYPE	Hydronic Heat Pump	Hydronic Heat Pump	Hydronic Heat Pump	
COOLING EQUIPMENT EFFICIENCY	13.5 EER	15.9 EER	17.0 EER	
MAKE AND MODEL NUMBER	RHP-F	HP-G	HP-C	
PIPE INSULATION REQUIRED?	Yes	Yes	Yes	
PIPE/DUCT INSULATION PROTECTED?	Yes	Yes	Yes	
HEATING DUCT LOCATION / R-VALUE	Ducts in Attic / 4.2	Ducts in Attic / 4.2	Ducts in Attic / 4.2	
COOLING DUCT LOCATION / R-VALUE	Ducts in Attic / 4.2	Ducts in Attic / 4.2	Ducts in Attic / 4.2	
VERIFIED SEALED DUCTS IN CEILING/ROOF SPACE	No	No	No	

CODE TABLES: Enter code from table below into columns above. (same code tables as above)

NOTES TO FIELD — For Building Department Use Only

Run Initiation Time: 07/05/05 16:07:55 Run Code: 1120604875

CERTIFICATE OF COMPLIANCE — Performance MECH-1

PROJECT NAME: Vallejo Center New Classroom Building — DATE: 7/13/2005

SYSTEM FEATURES

SYSTEM NAME	HP-C (1-10)	HP-H (1-8/1-13)	HP-G (1-9/1-12)	NOTE TO FIELD
TIME CONTROL	Programmable Switch	Programmable Switch	Programmable Switch	
SETBACK CONTROL	Heating Required	Heating Required	Heating Required	
ISOLATION ZONES	n/a	n/a	n/a	
HEAT PUMP THERMOSTAT?	Yes	Yes	Yes	
ELECTRIC HEAT?	0.0 kW	0.0 kW	0.0 kW	
FAN CONTROL	Constant Volume	Constant Volume	Constant Volume	
VAV MINIMUM POSITION CONTROL?	No	No	No	
SIMULTANEOUS HEAT/COOL?	No	No	No	
HEATING SUPPLY RESET	Constant Temp	Constant Temp	Constant Temp	
COOLING SUPPLY RESET	Constant Temp	Constant Temp	Constant Temp	
HEAT REJECTION CONTROL	n/a	n/a	n/a	
VENTILATION	Air Balance	Air Balance	Air Balance	
OUTDOOR DAMPER CONTROL	Auto	Auto	Auto	
ECONOMIZER TYPE	No Economizer	No Economizer	No Economizer	
DESIGN O.A. CFM (MECH-3, COLUMN I)	84 cfm	430 cfm	335 cfm	
HEATING EQUIPMENT TYPE	Heat Pump	Heat Pump	Heat Pump	
HEATING EQUIPMENT EFFICIENCY	5.30 COP	5.20 COP	5.20 COP	
COOLING EQUIPMENT TYPE	Hydronic Heat Pump	Hydronic Heat Pump	Hydronic Heat Pump	
COOLING EQUIPMENT EFFICIENCY	17.0 EER	16.4 EER	15.9 EER	
MAKE AND MODEL NUMBER	HP-C	HP-H	HP-G	
PIPE INSULATION REQUIRED?	Yes	Yes	Yes	
PIPE/DUCT INSULATION PROTECTED?	Yes	Yes	Yes	
HEATING DUCT LOCATION / R-VALUE	Ducts in Attic / 4.2	Ducts in Attic / 4.2	Ducts in Attic / 4.2	
COOLING DUCT LOCATION / R-VALUE	Ducts in Attic / 4.2	Ducts in Attic / 4.2	Ducts in Attic / 4.2	
VERIFIED SEALED DUCTS IN CEILING/ROOF SPACE	No	No	No	

CODE TABLES: Enter code from table below into columns above. (same code tables as above)

NOTES TO FIELD — For Building Department Use Only

Run Initiation Time: 07/05/05 16:07:55 Run Code: 1120604875

CERTIFICATE OF COMPLIANCE — Performance MECH-1

PROJECT NAME: Vallejo Center New Classroom Building — DATE: 7/13/2005

SYSTEM FEATURES

SYSTEM NAME	HP-A (1-11)	HP-A (1-6)	HP-I (1-12)	NOTE TO FIELD
TIME CONTROL	Programmable Switch	Programmable Switch	Programmable Switch	
SETBACK CONTROL	Heating Required	Heating Required	Heating Required	
ISOLATION ZONES	n/a	n/a	n/a	
HEAT PUMP THERMOSTAT?	Yes	Yes	Yes	
ELECTRIC HEAT?	0.0 kW	0.0 kW	0.0 kW	
FAN CONTROL	Constant Volume	Constant Volume	Constant Volume	
VAV MINIMUM POSITION CONTROL?	No	No	No	
SIMULTANEOUS HEAT/COOL?	No	No	No	
HEATING SUPPLY RESET	Constant Temp	Constant Temp	Constant Temp	
COOLING SUPPLY RESET	Constant Temp	Constant Temp	Constant Temp	
HEAT REJECTION CONTROL	n/a	n/a	n/a	
VENTILATION	Air Balance	Air Balance	Air Balance	
OUTDOOR DAMPER CONTROL	Auto	Auto	Auto	
ECONOMIZER TYPE	No Economizer	No Economizer	No Economizer	
DESIGN O.A. CFM (MECH-3, COLUMN I)	98 cfm	86 cfm	474 cfm	
HEATING EQUIPMENT TYPE	Heat Pump	Heat Pump	Heat Pump	
HEATING EQUIPMENT EFFICIENCY	5.90 COP	5.90 COP	5.00 COP	
COOLING EQUIPMENT TYPE	Hydronic Heat Pump	Hydronic Heat Pump	Hydronic Heat Pump	
COOLING EQUIPMENT EFFICIENCY	16.8 EER	16.8 EER	15.2 EER	
MAKE AND MODEL NUMBER	HP-A	HP-A	HP-I	
PIPE INSULATION REQUIRED?	Yes	Yes	Yes	
PIPE/DUCT INSULATION PROTECTED?	Yes	Yes	Yes	
HEATING DUCT LOCATION / R-VALUE	Ducts in Attic / 4.2	Ducts in Attic / 4.2	Ducts in Attic / 4.2	
COOLING DUCT LOCATION / R-VALUE	Ducts in Attic / 4.2	Ducts in Attic / 4.2	Ducts in Attic / 4.2	
VERIFIED SEALED DUCTS IN CEILING/ROOF SPACE	No	No	No	

CODE TABLES: Enter code from table below into columns above. (same code tables as above)

NOTES TO FIELD — For Building Department Use Only

Run Initiation Time: 07/05/05 16:07:55 Run Code: 1120604875

CERTIFICATE OF COMPLIANCE — Performance MECH-1

PROJECT NAME: Vallejo Center New Classroom Building — DATE: 7/13/2005

SYSTEM FEATURES

SYSTEM NAME	HP-E (1-4/1-5/1-7)	HP-A (1-3)	HP-B (1-1/1-2)	NOTE TO FIELD
TIME CONTROL	Programmable Switch	Programmable Switch	Programmable Switch	
SETBACK CONTROL	Heating Required	Heating Required	Heating Required	
ISOLATION ZONES	n/a	n/a	n/a	
HEAT PUMP THERMOSTAT?	Yes	Yes	Yes	
ELECTRIC HEAT?	0.0 kW	0.0 kW	0.0 kW	
FAN CONTROL	Constant Volume	Constant Volume	Constant Volume	
VAV MINIMUM POSITION CONTROL?	No	No	No	
SIMULTANEOUS HEAT/COOL?	No	No	No	
HEATING SUPPLY RESET	Constant Temp	Constant Temp	Constant Temp	
COOLING SUPPLY RESET	Constant Temp	Constant Temp	Constant Temp	
HEAT REJECTION CONTROL	n/a	n/a	n/a	
VENTILATION	Air Balance	Air Balance	Air Balance	
OUTDOOR DAMPER CONTROL	Auto	Auto	Auto	
ECONOMIZER TYPE	No Economizer	No Economizer	No Economizer	
DESIGN O.A. CFM (MECH-3, COLUMN I)	1365 cfm	70 cfm	294 cfm	
HEATING EQUIPMENT TYPE	Heat Pump	Heat Pump	Heat Pump	
HEATING EQUIPMENT EFFICIENCY	5.80 COP	5.90 COP	5.90 COP	
COOLING EQUIPMENT TYPE	Hydronic Heat Pump	Hydronic Heat Pump	Hydronic Heat Pump	
COOLING EQUIPMENT EFFICIENCY	17.6 EER	16.8 EER	16.8 EER	
MAKE AND MODEL NUMBER	HP-E	HP-A	HP-B	
PIPE INSULATION REQUIRED?	Yes	Yes	Yes	
PIPE/DUCT INSULATION PROTECTED?	Yes	Yes	Yes	
HEATING DUCT LOCATION / R-VALUE	Ducts in Attic / 4.2	Ducts in Attic / 4.2	Ducts in Attic / 4.2	
COOLING DUCT LOCATION / R-VALUE	Ducts in Attic / 4.2	Ducts in Attic / 4.2	Ducts in Attic / 4.2	
VERIFIED SEALED DUCTS IN CEILING/ROOF SPACE	No	No	No	

CODE TABLES: Enter code from table below into columns above. (same code tables as above)

NOTES TO FIELD — For Building Department Use Only

Run Initiation Time: 07/05/05 16:07:55 Run Code: 1120604875

APPROVAL STAMP
IDENTIFICATION STAMP
DIVISION OF THE STATE ARCHITECT
APPL 02- 107417
AC [signature] FLS PH SS PVC
DATE: 12/21/05

NO.	ISSUED FOR	DATE
1	DSA APPROVAL SET	12/08/05

REGISTERED PROFESSIONAL ENGINEER — GEORGE L. ARELLANO — No. M29691 Exp. 06-30-06 — Mechanical — STATE OF CALIFORNIA

Date Signed 12/06/05
CERTIFIED BY

K M D
KAPLAN McLAUGHLIN DIAZ
ARCHITECTURE PLANNING
222 VALLEJO SAN FRANCISCO, CA 94111
(415) 398-5191 FAX (415) 394-7158

ALFATECH
120 MONTGOMERY STREET, SUITE 715 415-403-3000
SAN FRANCISCO, CALIFORNIA 94104 FAX: 415-788-6040
SAN JOSE • NEW JERSEY • SINGAPORE • AUSTRALIA
AT Project No. 204231

SOLANO COMMUNITY COLLEGE

SCCD
VALLEJO CENTER
Contract # A003.6123.01.V1

PROJECT NO. 419-201 — DATE 12-08-05

MECHANICAL
TITLE 24
AS BUILTS

M0.03

PLOT DATE:

COPYRIGHT © 2004 BY KMD (KAPLAN McLAUGHLIN DIAZ). ALL RIGHTS RESERVED.

ENVELOPE MANDATORY MEASURES — ENV-MM

PROJECT NAME: Vallejo Center New Classroom Building — DATE: 7/13/2005

	DESCRIPTION	Designer	Enforcement
[X]	1106(a) Installed insulating material shall have been certified by the manufacturer to comply with the California Quality Standards for insulating material, Title 20, Chapter 4, Article 3.		
[X]	1106(c) All insulating materials shall be installed in compliance with the flame spread rating and smoke density requirements of Sections 2602 and 707 of Title 24, Part 2.		
[X]	1116(a) All Exterior Joints and openings in the building that are observable sources of air leakage shall be caulked, gasketed, weatherstripped or otherwise sealed.		
[X]	1116(b) Site Constructed Doors, Windows and Skylights shall be caulked between the unit and the building, and shall be weatherstripped (except for unframed glass doors and fire doors).		
[X]	1116(d) Manufactured Doors and Windows installed shall have air infiltration rates not exceeding those shown in Table Number I-C of the Standards. Manufactured fenestration products must be labeled for U-value according to NFRC procedures.		
[X]	1116(e) Demising Walls in Nonresidential Buildings The opaque portions of framed demising walls in nonresidential buildings shall have insulation with an installed R-value of no less than R-11 between framing members.		

MECHANICAL MANDATORY MEASURES — Part 1 of 2 — MECH-MM

PROJECT NAME: Vallejo Center New Classroom Building — DATE: 7/13/2005

	DESCRIPTION	Designer	Enforcement
	Equipment and Systems Efficiencies		
[X]	111 Any appliance for which there is a California standard established in the Appliance Efficiency Regulations will comply with the applicable standard.		
[ ]	115(c) Fan type central furnaces shall not have a pilot light.		
[X]	123 Piping, except that conveying fluids at temperatures between 60 and 105 degrees Fahrenheit, or within HVAC equipment, shall be insulated in accordance with Standards Section 123.		
[X]	124 Air handling duct systems shall be installed and insulated in compliance with Sections 601, 603 and 604 of the Uniform Mechanical Code.		
	Controls		
	122(a) Each space conditioning system shall be installed with one of the following		
[X]	122(a)1A Each space conditioning system serving building types such as offices and manufacturing facilities (and all others not explicitly exempt from the requirements of Section 112 (d)) shall be installed with an automatic time switch with an accessible manual override that allows operation of the system during off-hours for up to 4 hours. The time switch shall be capable of programming different schedules for weekdays and weekends and have program backup capabilities that prevent the loss of the device's program and time setting for at least 10 hours if power is interrupted; or		
[X]	122(a)1B An occupancy sensor to control the operating period of the system; or		
[ ]	122(a)1C A 4-hour timer that can be manually operated to control the operating period of the system.		
[X]	122(a)2 Each space conditioning system shall be installed with controls that temporarily restart and temporarily operate the system as required to maintain a setback heating and/or a setup cooling thermostat setpoint.		
[ ]	122(g) Each space conditioning system serving multiple zones with a combined conditioned floor area more than 25,000 square feet shall be provided with isolation zones. Each zone shall not exceed 25,000 square feet; shall be provided with isolation devices, such as valves or dampers, that allow the supply of heating or cooling to be setback or shut off independently of other isolation area(s) and shall be controlled by a time control device as described above.		
[X]	122(a)3 Each space conditioning system shall be controlled by an individual thermostat that responds to temperature within the zone. Where used to control heating, the control shall be adjustable down to 55 degrees F or lower. For cooling, the control shall be adjustable up to 85 degrees F or higher. Where used for both heating and cooling, the control shall be capable of providing a deadband of at least 5 degrees F within which the supply of heating and cooling is shut off or reduced to a minimum.		
[X]	122(c) Thermostats shall have numeric setpoints in degrees Fahrenheit (F) and adjustable setpoint steps accessible only to authorized personnel.		
[ ]	123(b) Heat pumps shall be installed with controls to prevent electric resistance supplementary heater operation when the heating load can be met by the heat pump alone.		

MECHANICAL MANDATORY MEASURES — Part 2 of 2 — MECH-MM

PROJECT NAME: Vallejo Center New Classroom Building — DATE: 7/13/2005

	Description	Designer	Enforcement
	Ventilation		
[X]	121(a) Controls shall be provided to allow outside air dampers or devices to be operated at the ventilation rates as specified on these plans.		
[ ]	121(f) Gravity or automatic dampers interlocked and closed on fan shutdown shall be provided on the outside air intakes and discharges of all space conditioning and exhaust systems.		
[ ]	121(f) All gravity ventilating systems shall be provided with automatic or readily accessible manually operated dampers in all openings to the outside, except for combustion air openings.		
[ ]	121(f)1 Air Balancing. The system shall be balanced in accordance with the National Environmental Balancing Bureau (NEBB) Procedural Standards (1983), or Associated Air Balance Council (AABC) National Standards (1989); or		
[X]	121(f)2 Outside Air Certification. The system shall provide the minimum outside air as shown on the mechanical drawings, and shall be measured and certified by the installing licensed C-20 mechanical contractor and certified by (1) the design mechanical engineer, (2) the installing licensed C-20 mechanical contractor, or (3) the person with overall responsibility for the design of the ventilation system; or		
[ ]	121(f)3 Outside Air Measurement. The system shall be equipped with a calibrated local or remote device capable of measuring the quantity of outside air on a continuous basis and displaying that quantity on a readily accessible display device; or		
[ ]	121(f)4 Another method approved by the Commission.		
	Service Water Heating Systems		
[ ]	113(a)2 If a circulating hot water system is installed, it shall have a control capable of automatically turning off the circulating pump(s) when hot water is not required.		
[X]	113(a)3B Lavatories in restrooms of public facilities shall be equipped with controls to limit the outlet temperature to 110 degrees F.		
[X]	113(a)3C Lavatories in restrooms of public facilities shall be equipped with one of the following Outlet devices that limit the flow of hot water to a maximum of 0.5 gallons per minute. Foot actuated control valves, and outlet devices that limit the flow of hot water to a maximum of 0.75 gallons per minute. Proximity sensor actuated control valves, and outlet devices that limit the flow of hot water to a maximum of 0.75 gallons per minute. Self-closing valves, and outlet devices that limit the flow of hot water to a maximum of 2.5 gallons per minute, and 0.25 gallons/cycle (circulating system). Self-closing valves, and outlet devices that limit the flow of hot water to a maximum of 2.5 gallons per minute, and 0.50 gallons/cycle (non-circulating system). Self-closing valves, and outlet devices that limit the flow of hot water to a maximum of 2.5 gallons per minute, and 0.75 gallons/cycle (foot switches and proximity sensor controls).		

APPROVAL STAMP — IDENTIFICATION STAMP
DIVISION OF THE STATE ARCHITECT
APP. 107417
AC FLS TH SS MLC
DATE: 12/21/05

NO.	ISSUED FOR	DATE
1	DSA APPROVAL SET	12/08/05

REGISTERED PROFESSIONAL ENGINEER — GEORGE L. ARBULARIO — No. M29691 — Exp. 06-30-06 — Mechanical — STATE OF CALIFORNIA

CERTIFIED BY: Date Signed 12/06/05

K M D
KAPLAN McLAUGHLIN DIAZ
ARCHITECTURE PLANNING
222 VALLEJO SAN FRANCISCO, CA 94111
(415) 398-5191 FAX (415) 394-7158

ALFATECH
120 MONTGOMERY STREET, SUITE 715 415-403-3000
SAN FRANCISCO, CALIFORNIA 94104 FAX: 415-788-8040
SAN JOSE • NEW JERSEY • SINGAPORE • AUSTRALIA
AT Project No. 30431

SOLANO COMMUNITY COLLEGE

SCCD
VALLEJO CENTER
Contract # A003.6123.01.V1

PROJECT NO. 419-201 — DATE 12-08-05

MECHANICAL
TITLE 24

AS BUILTS

M0.04

PLOT DATE:

COPYRIGHT © 2004 BY KMD (KAPLAN McLAUGHLIN DIAZ). ALL RIGHTS RESERVED.

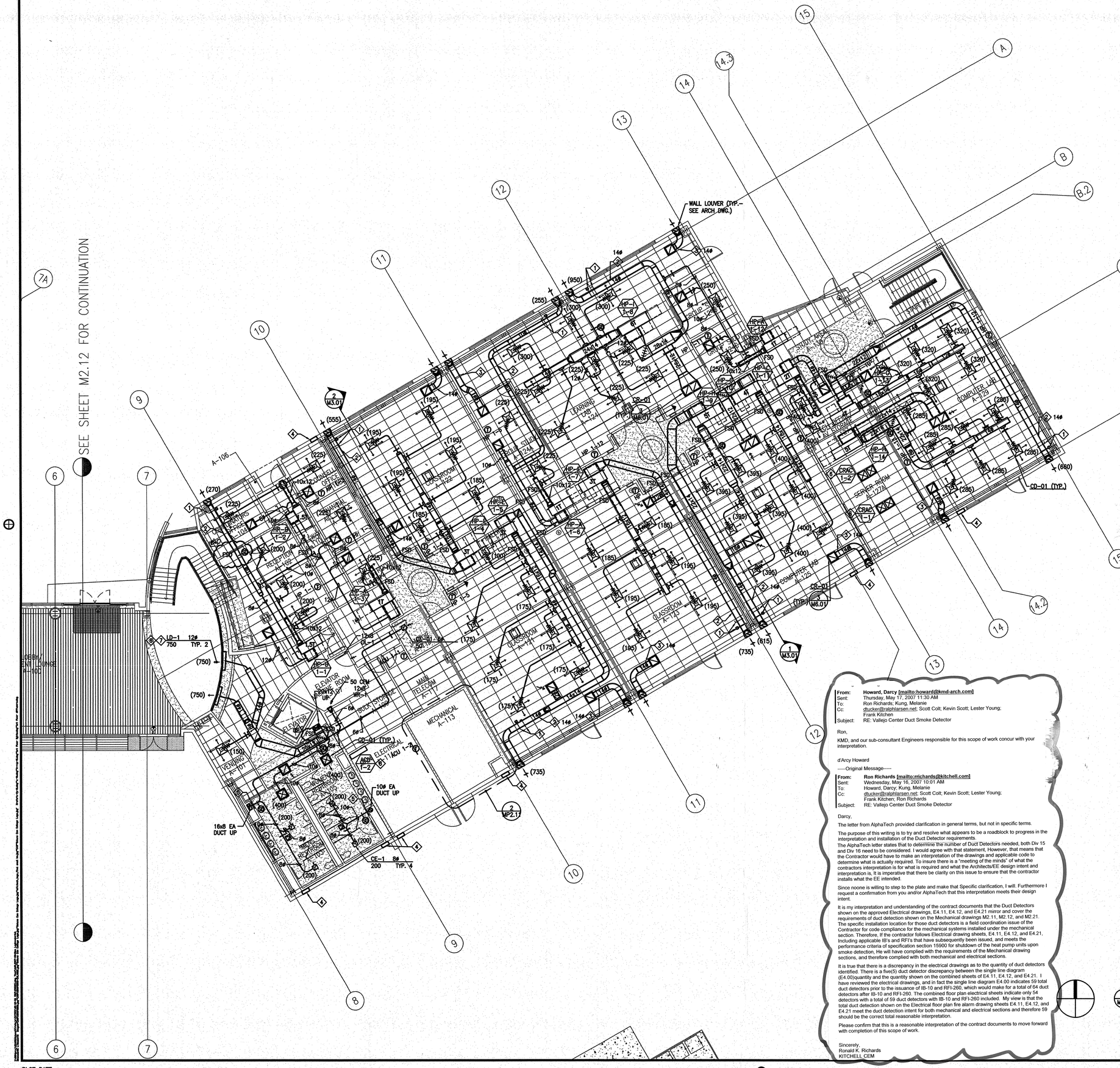

NOTES:

1. FOR GENERAL NOTES, SEE M0.1.
2. PROVIDE VOLUME DAMPER AT EACH BRANCH DUCT TO DIFFUSER (SEE DAMPER SCHEDULE).
3. CONTRACTOR SHALL COORDINATE MECHANICAL SHOP DRAWINGS WITH ALL TRADES SO AS TO NOT ROUTE ANY CONDUIT, WIRING PIPING DUCTWORK, OR OTHER BUILDING SYSTEM UNDER HEAT PUMPS OR HEAT PUMP ACCESS LOCATIONS.
4. SEE TITLE 24 VENTILATION SHEETS FOR BALANCING HEAT PUMP RETURN/OUTSIDE AIR.

KEY NOTES:

1. TWO-POSITON 24-V CONTROL DAMPER AND BALANCING DAMPER (TYP. AT EACH O/A LOUVER).
2. O.A. DUCT, ROUTE TO RETURN AIR PLENUM BOX, TYP.
3. RELIEF AIR DUCT TO RELIEF LOUVER, PROVIDE COUNTER BALANCING BDD (SET AT 0.025" H20)
4. BLANK-OFF LOUVER (SAD).
5. FIRE SMOKE DAMPER WITH DUCT ACCESS PANEL. PROVIDE CEILING ACCESS PANEL IN LOCATIONS OF INACCESSIBLE CEILING (SAD),
6. INSTALL AND ROUTE REFRIGERANT PIPING TO ROOF. REFER TO MP2.11 & P2.11.
7. CONTINUOUS CURVED SLOT WITH 4'-0" PLENUM BOXES AND WEIR GATES (AIR FACTORS OF EQUAL).
8. LINEAR SLOT GRILLE AND DIFFUSSERS

From: Howard, Darcy [mailto:howard@kmd-arch.com]
Sent: Thursday, May 17, 2007 11:30 AM
To: Ron Richards; Kung, Melanie
Cc: dtucker@ralphlarsen.net; Scott Colt; Kevin Scott; Lester Young; Frank Kitchen
Subject: RE: Vallejo Center Duct Smoke Detector

Ron,

KMD, and our sub-consultant Engineers responsible for this scope of work concur with your interpretation.

d'Arcy Howard

-----Original Message-----

From: Ron Richards [mailto:rrichards@kitchell.com]
Sent: Wednesday, May 16, 2007 10:01 AM
To: Howard, Darcy; Kung, Melanie
Cc: dtucker@ralphlarsen.net; Scott Colt; Kevin Scott; Lester Young; Frank Kitchen; Ron Richards
Subject: RE: Vallejo Center Duct Smoke Detector

Darcy,

The letter from AlphaTech provided clarification in general terms, but not in specific terms.

The purpose of this writing is to try and resolve what appears to be a roadblock to progress in the interpretation and installation of the Duct Detector requirements.
The AlphaTech letter states that to determine the number of Duct Detectors needed, both Div 15 and Div 16 need to be considered. I would agree with that statement, However, that means that the Contractor would have to make an interpretation of the drawings and applicable code to determine what is actually required. To insure there is a "meeting of the minds" of what the contractors interpretation is for what is required and what the Architects/EE design intent and interpretation is, It is imperative that there be clarity on this issue to ensure that the contractor installs what the EE intended.

Since noone is willing to step to the plate and make that Specific clarification, I will. Furthermore I request a confirmation from you and/or AlphaTech that this interpretation meets their design intent.

It is my interpretation and understanding of the contract documents that the Duct Detectors shown on the approved Electrical drawings, E4.11, E4.12, and E4.21 mirror and cover the requirements of duct detection shown on the Mechanical drawings M2.11, M2.12, and M2.21.
The specific installation location for those duct detectors is a field coordination issue of the Contractor for code compliance for the mechanical systems installed under the mechanical section. Therefore, if the contractor follows Electrical drawing sheets, E4.11, E4.12, and E4.21, Including applicable IB's and RFI's that have subsequently been issued, and meets the performance criteria of specification section 15900 for shutdown of the heat pump units upon smoke detection, He will have complied with the requirements of the Mechanical drawing sections, and therefore complied with both mechanical and electrical sections.

It is true that there is a discrepancy in the electrical drawings as to the quantity of duct detectors identified. There is a five(5) duct detector discrepancy between the single line diagram (E4.00)quantity and the quantity shown on the combined sheets of E4.11, E4.12, and E4.21. I have reviewed the electrical drawings, and in fact the single line diagram E4.00 indicates 59 total duct detectors prior to the issuance of IB-10 and RFI-260, which would make for a total of 64 duct detectors after IB-10 and RFI-260. The combined floor plan electrical sheets indicate only 54 detectors with a total of 59 duct detectors with IB-10 and RFI-260 included. My view is that the total duct detection shown on the Electrical floor plan fire alarm drawing sheets E4.11, E4.12, and E4.21 meet the duct detection intent for both mechanical and electrical sections and therefore 59 should be the correct total reasonable interpretation.

Please confirm that this is a reasonable interpretation of the contract documents to move forward with completion of this scope of work.

Sincerely,
Ronald K. Richards
KITCHELL CEM

DIFFUSER AND REGISTER SIZING TABLE

TAG	NECK SIZE	CFM RANGE
CD-01	8"ø	0-210
CD-01	10"ø	211-325
CD-01	12"ø	326-425
CD-01	14"ø	426-600
CD-01	16"ø	601-800

NOTES:

ALL CEILING SUPPLY DIFFUSERS SHALL BE OF TYPE CD-01 UNLESS OTHERWISE NOTED. SEE SHEET M4.01 FOR DIFFUSER, GRILLE AND REGISTER SCHEDULE.

1 M2.11 **FIRST FLOOR MECHANICAL PLAN-BUILDING A**
1/8"=1'-0"

APPROVAL STAMP
IDENTIFICATION STAMP FB-10
DIVISION OF THE STATE ARCHITECT
APPL 02- 107417
AC FLS EL SS
DATE: 4/27/07

NO.	ISSUED FOR	DATE
IB#0	INFORMATION BULLETIN # 10	05/22/07
1	DSA APPROVAL SET	12/08/05

REGISTERED PROFESSIONAL ENGINEER DARCY D. CLAYCOMB M20617 Exp. 6/30/07 MECHANICAL STATE OF CALIFORNIA
CERTIFIED SPECIAL INSPECTOR

K M D
KAPLAN McLAUGHLIN DIAZ
ARCHITECTURE PLANNING
222 VALLEJO SAN FRANCISCO, CA 94111
(415) 398-5191 FAX (415) 394-7158

alfatech_logo_Final small bw.jpg

130 MONTGOMERY STREET, SUITE 715 415-403-3000
SAN FRANCISCO, CALIFORNIA 94104 FAX:415-788-8040
SAN JOSE • NEW JERSEY • SINGAPORE • AUSTRALIA
All Projects. Since

SCCD
VALLEJO CENTER
Contract # A003.6123.01.V1

PROJECT NO. 419-201
DATE 12-08-05

FIRST FLOOR MECHANICAL PLAN BUILDING A
AS BUILTS

M2.11

PLOT DATE:

COPYRIGHT © 2004 BY KMD (KAPLAN McLAUGHLIN DIAZ). ALL RIGHTS RESERVED

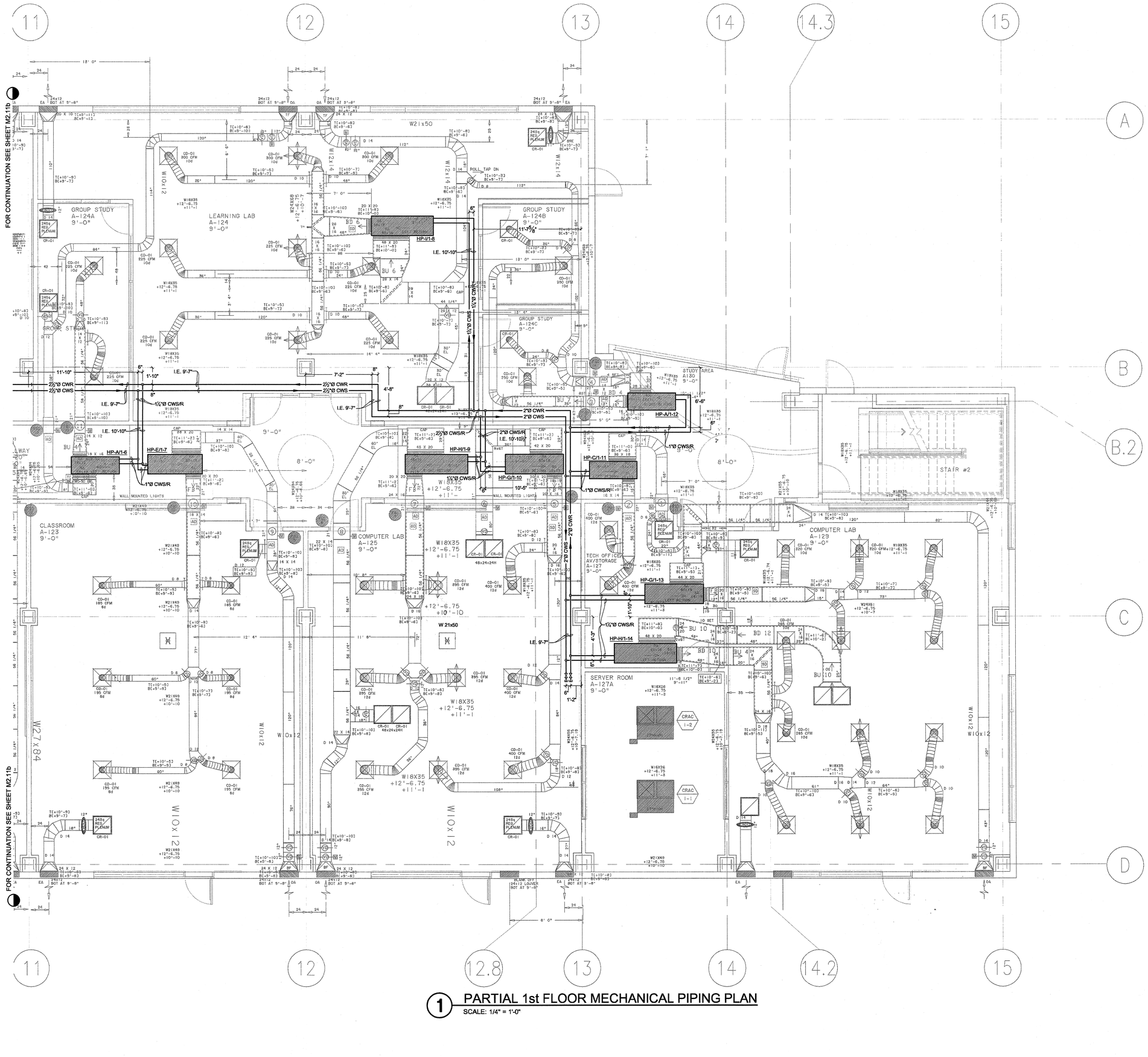

1 PARTIAL 1st FLOOR MECHANICAL PIPING PLAN
SCALE: 1/4" = 1'-0"

DOWDLE & SONS MECHANICAL
100 TOWER ROAD
AMERICAN CANYON, CA. 94503
STATE CONTRACTORS LICENSE NO. 542743
PHONE (707) 224-6968

NO.	DATE:	REVISION:

PARTIAL FIRST FLOOR MECHANICAL PIPING PLAN BUILDING 'A'

VALLEJO EDUCATION CENTER
SLOANL COMMUNITY COLLEGE DISTRICT

545 COLUMBUS PARKWAY
VALLEJO, CALIFORNIA 94591

DATE: SEPTEMBER 17, 2006
SCALE: 1/4" = 1'-0"
DRAWN BY: AJ
REF DWG: MP2.11
JOB NO.: AS BUILTS
DRAWING NO.: M2.11a

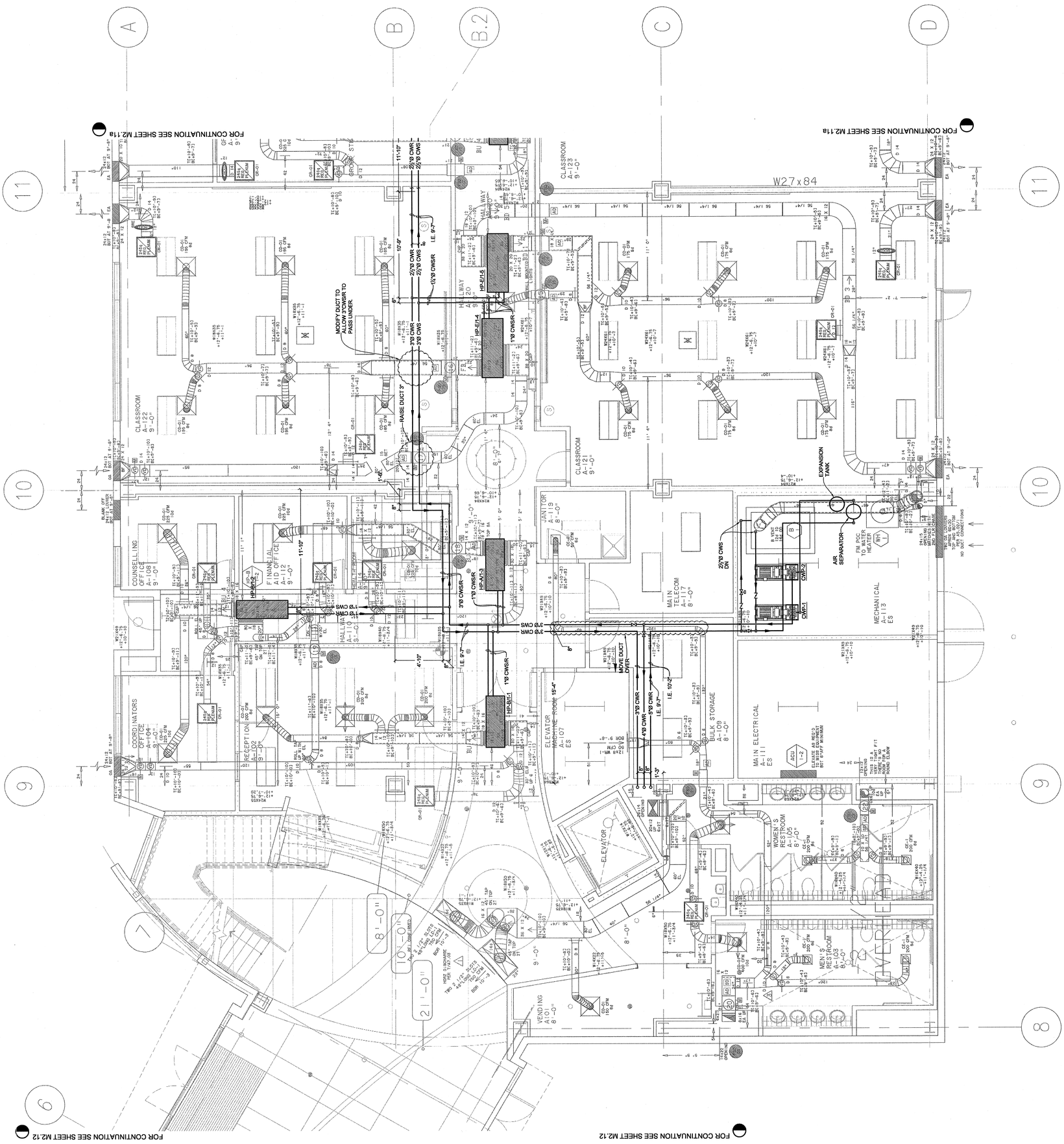

1 PARTIAL 1st FLOOR MECHANICAL PIPING PLAN

SCALE: 1/4" = 1'-0"

NO.	DATE:	REVISION:

PARTIAL FIRST FLOOR MECHANICAL PIPING PLAN BUILDING 'A'

VALLEJO EDUCATION CENTER
SLOANL COMMUNITY COLLEGE DISTRICT
545 COLUMBUS PARKWAY
VALLEJO, CALIFORNIA 94591

DATE: SEPTEMBER 17, 2006
SCALE: 1/4" = 1'-0"
DRAWN BY: AJ
REF DWG: MP2.11
JOB NO.: AS BUILTS
DRAWING NO.: M2.11b

DOWDLE & SONS MECHANICAL
100 TOWER ROAD
AMERICAN CANYON, CA. 94503
STATE CONTRACTORS LICENSE NO. 542743
PHONE (707) 224-6968

INDUSTRIAL • COMMERCIAL • PIPING • PLUMBING
Dowdle & Sons MECHANICAL INC.
License No. 542743

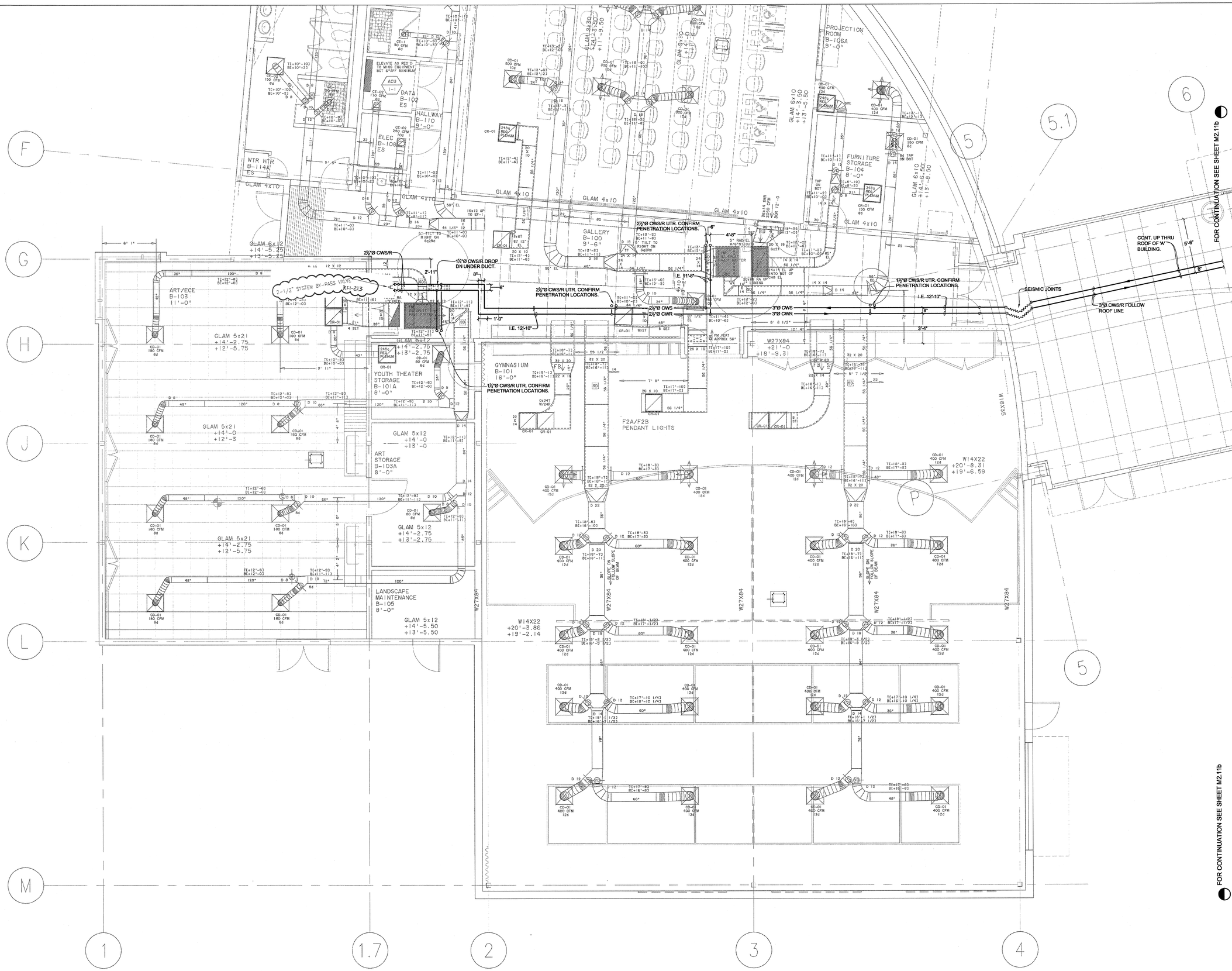

1 PARTIAL 1st FLOOR MECHANICAL PIPING PLAN

SCALE: 1/4" = 1'-0"

DOWDLE & SONS MECHANICAL
100 TOWER ROAD
AMERICAN CANYON, CA. 94503
STATE CONTRACTORS LICENSE NO. 542743
PHONE (707) 224-6988

NO.	DATE:	REVISION:

PARTIAL FIRST FLOOR MECHANICAL
PIPING PLAN BUILDING 'B'

VALLEJO EDUCATION CENTER
SLOANL COMMUNITY COLLEGE DISTRICT

545 COLUMBUS PARKWAY
VALLEJO, CALIFORNIA 94591

DATE:	SEPTEMBER 17, 2006
SCALE:	1/4" = 1'-0"
DRAWN BY:	AJ
REF DWG:	MP2.12
JOB NO.	AS BUILTS
DRAWING NO.:	M2.12

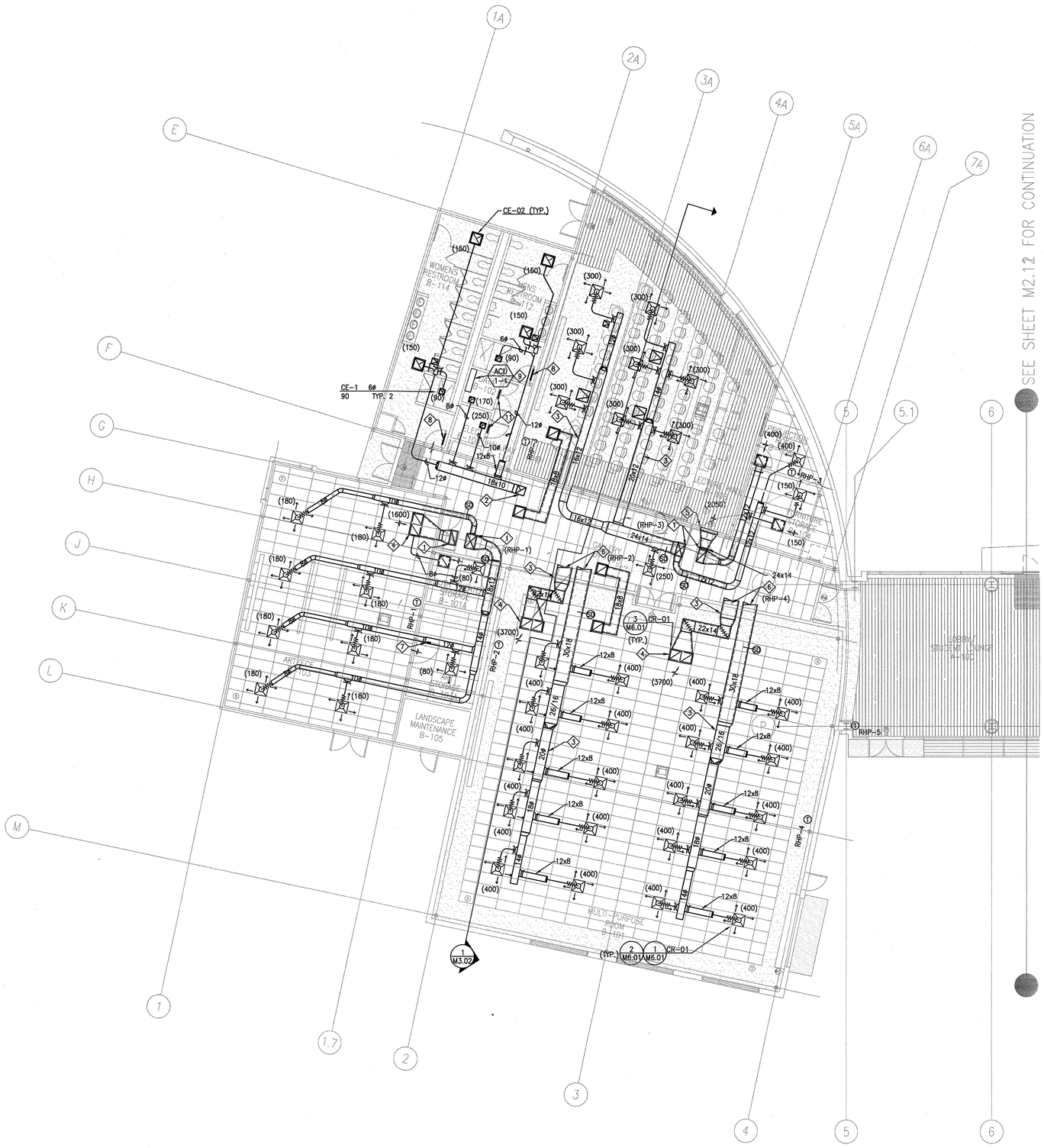

NOTES:

1. FOR GENERAL NOTES, SEE M0.1.
2. PROVIDE VOLUME DAMPER AT EACH BRANCH DUCT TO DIFFUSER (SEE DAMPER SCHEDULE).
3. CONTRACTOR SHALL COORDINATE MECHANICAL SHOP DRAWINGS WITH ALL TRADES SO AS TO NOT ROUTE ANY CONDUIT, WIRING PIPING DUCTWORK, OR OTHER BUILDING SYSTEM UNDER HEAT PUMPS OR HEAT PUMP ACCESS LOCATIONS.
4. SEE TITLE 24 VENTILATION SHEETS FOR BALANCING HEAT PUMP RETURN/OUTSIDE AIR.

KEY NOTES:

1. SUPPLY/RETURN DUCT UP THROUGH ROOF TO HEAT PUMP CURB (COORDINATE WITH CURB MFR.)
2. EXHAUST DUCT UP THROUGH ROOF TO EXHAUST FAN.
3. ROUTE DUCTWORK BETWEEN GLULAMS, FOR COORDINATION, SSD.
4. RETURN AIR GRILLES WITH SHEETMETAL PLENUM.
5. 36x14, TITUS MODEL 30RS, SIDEWALL RETURN AIR GRILLE.
6. ROUTE DUCTWORK THROUGH EXTERIOR WALL (WEATHERPROOF AND SEAL PENETRATION) AND TO ROOFTOP UNITS' HORIZONTAL DISCHARGE ROOF CURB. RFI-024 HORIZONTAL DISCHARGE
7. TITUS, MODEL CT-700L, 8x8 DOOR GRILL.
8. TITUS, MODEL CT-700L, 24X16 DOOR GRILL.
9. INSTALL AND ROUTE REFRIGERANT PIPING TO CU 1-1 ON ROOF.
10. INSTALL AND ROUTE REFRIGERANT PIPING TO ROOF.
11. 18x10 DL-1

DIFFUSER AND REGISTER SIZING TABLE

TAG	NECK SIZE	CFM RANGE
CD-01	8"ø	0-210
CD-01	10"ø	211-325
CD-01	12"ø	326-425
CD-01	14"ø	426-600
CD-01	16"ø	601-800

NOTES:
ALL CEILING SUPPLY DIFFUSERS SHALL BE OF TYPE CD-01 UNLESS OTHERWISE NOTED. SEE SHEET M4.01 FOR DIFFUSER, GRILLE AND REGISTER SCHEDULE.

1 / M2.12 **FIRST FLOOR MECHANICAL PLAN-BUILDING B**
1/8"=1'-0"

APPROVAL STAMP
IDENTIFICATION STAMP
DIVISION OF THE STATE ARCHITECT
APP 02- 107417
AC FLS TH SS
DATE: 12/21/05

NO.	ISSUED FOR	DATE
1	DSA APPROVAL SET	12/06/05

CERTIFIED BY
Date Signed 12/06/05

K M D
KAPLAN McLAUGHLIN DIAZ
ARCHITECTURE PLANNING
222 VALLEJO SAN FRANCISCO, CA 94111
(415) 398-5191 FAX (415) 394-7158

ALFATECH
120 MONTGOMERY STREET, SUITE 715 415-403-3000
SAN FRANCISCO, CALIFORNIA 94104 FAX: 415-788-6040
SAN JOSE • NEW JERSEY • SINGAPORE • AUSTRALIA
AT Project No. 20431

SOLANO COMMUNITY COLLEGE

SCCD
VALLEJO CENTER
Contract # A003.6123.01.V1

PROJECT NO. 419-201
DATE 12-08-05

FIRST FLOOR MECHANICAL PLAN BUILDING B
AS BUILTS

M2.12

PLOT DATE:
COPYRIGHT © 2004 BY KMD (KAPLAN McLAUGHLIN DIAZ). ALL RIGHTS RESERVED.

SEE SHEET M2.22 FOR CONTINUATION

Ralph Larsen & Son, Inc.
General Contractors License No. 189341
300 9th Avenue
San Mateo, CA 94401-4221
Phone: (650) 579-0335
Fax: (650) 579-0349

Request for Information 037

Detailed, RFIs Grouped by RFI Number

Subject: Wall louvers appear to be in conflict with columns
Discipline:
Category:

Cc: **Company Name** **Contact Name** **Copies** **Notes**

Question **Date Required: 7/8/2006**

Review the attached RFI-4 by Aire Sheet Metal's detailer. There are louvers are shown on AS.02. They are approximately 24x12, bottom at +/- 9'-0". For the most part they have been placed either side of a column with a few exceptions. They are:
South side, 1st & 2nd floor at #15 line.
North side, 1st & 2nd floor at #9 line; 2nd floor at #12 line; and 1st & 2nd floor at #13 line.
These louvers appear to be behind steel columns and cannot be ducted to.
There are no dimensions in the contract drawings to indicate where any of the louvers are located, so its difficult to ascertain which of the louvers clear the columns and wall constructions and which ones are blocked. Detail 1/AS.02 is an enlarged detail of the second floor area where louvers are shown at GRID LINES 12 and 13. This detail may be good back ground to show how to get the 24" X 12" louvers and the required ductwork to fit beside the columns and the inside corner of plaster finish at GRID 13.
1. Will you provide dimensions for the placement of these louvers and resolve the conflicts of the 7 louvers that appear to be blocked?

Suggestion

Answer **Date Answered:**

1) 1st & 2nd fl @ #15 line: (2) louvers, no conflict apparent, ample space appears adjacent to column to locate louver & ductwork, locate louver/ductwork min. dim. away from column, exact dim. not critical
2) 1st & 2nd fl @ #9 line: (2) louvers, no conflict apparent, ample space appears adjacent to column to locate louver/ductwork, locate louver/ductwork min. dim. away from column, exact dim not critical
3) 2nd fl. @ #12 line: (1) louver, no conflict apparent, ample space appears adjacent to column to locate louver/ductwork, locate louver/ductwork min. dim. away from column, exact dim. not critical
4) 1st fl. @ #13 line: (1) louver, no conflict apparent, ample space adjacent to column, locate louver/ductwork, locate louver/ductwork min. dim. away from column, exact dim. not critical
5) 2nd fl @ #13 line: (1) louver, conflict appears, does not appear to be adequate space to locate diffuser, rotate diffuser & transition duct work to vertical louver orientation, locate louver/ductwork min. dim. away from column, exact dim is not critical.

Printed by: Printed on: 8/23/2006 5:41:09 PM

PD/KMD
419-201
07/11/06
3/6

NOTES:

1. FOR GENERAL NOTES, SEE M0.1.
2. CONTRACTOR SHALL COORDINATE MECHANICAL SHOP DRAWINGS WITH ALL TRADES SO AS TO NOT ROUTE ANY CONDUIT, WIRING PIPING DUCTWORK, OR OTHER BUILDING SYSTEM UNDER HEAT PUMPS OR HEAT PUMP ACCESS LOCATIONS.
3. SEE TITLE 24 VENTILATION SHEETS FOR BALANCING HEAT PUMP RETURN/OUTSIDE AIR.

KEY NOTES:

1. 10ø STAINLESS STEEL FUME EXHAUST DUCT UP THROUGH ROOF (900 CFM).
2. 8ø STAINLESS STEEL FUME EXHAUST DUCT UP THROUGH ROOF (600 CFM).
3. TWO-POSITON CONTROL DAMPER AND BALANCING DAMPER (TYP. AT EACH O/A LOUVER).
4. O.A. DUCT, ROUTE TO RETURN AIR PLENUM BOX, TYP.
5. RELIEF AIR DUCT TO RELIEF LOUVER, PROVIDE COUNTER BALANCING BDD (SET AT 0.05" H20)
6. BLANK-OFF LOUVER (SAD).
7. FIRE SMOKE DAMPER WITH DUCT ACCESS PANEL. PROVIDE CEILING ACCESS PANEL IN LOCATIONS OF INACCESSIBLE CEILING (SAD),
8. RETURN AIR GRILLE WITH SHEETMETAL PLENUM (TYP.)
9. EXHAUST GRILLE (XX), CONNECT EXHAUST DUCT UP TO EXHAUST FAN ON ROOF. DUCT SIZE SAME SIZE AS EXHAUST FAN DUCT CONNECTION SIZE.
10. EXHAUST DUCT UP TO EXHAUST FAN ON ROOF DUCT SIZE AME AS EXHAUST FAN DUCT CONNECTION SIZE.
11. SUPPLY/RETURN DUCT UP THROUGH ROOF TO HEAT PUMP CURB (COORDINATE WITH CURB MFR.)
12. CONTINUOUS CURVED SLOT WITH 4'-0" PLENUM BOXES AND WEIR GATES (AIR FACTORS OR EQUAL).
13. FIRE SMOKE DAMPER WITH DUCT ACCESS PANEL. PROVIDE CEILING ACCESS PANEL IN LOCATIONS OF INACCESSIBLE CEILING (SAD).
14. 1" ACOUSTICAL LINING (TYP.)
15. 1-1/2"ø DN TO DRY CHEMICAL STORAGE CABINET.
16. INSTALL LINEAR DIFFUSER UNDER SOFFIT. SEE ARCH DETAIL A8.54 FOR INSTALLATION.
17. INSTALL AND ROUTE REFRIGERANT PIPING TO ROOF.
18. UNDERCUT DOOR 1"

From: Howard, Darcy [mailto:howard@kmd-arch.com]
Sent: Thursday, May 17, 2007 11:30 AM
To: Ron Richards; Kung, Melanie
Cc: dlucker@ralphlarsen.net; Scott Colt; Kevin Scott; Lester Young; Frank Kitchen
Subject: RE: Vallejo Center Duct Smoke Detector

Ron,

KMD, and our sub-consultant Engineers responsible for this scope of work concur with your interpretation.

d'Arcy Howard

-----Original Message-----

From: Ron Richards [mailto:rrichards@kitchell.com]
Sent: Wednesday, May 16, 2007 10:01 AM
To: Howard, Darcy; Kung, Melanie
Cc: dlucker@ralphlarsen.net; Scott Colt; Kevin Scott; Lester Young; Frank Kitchen; Ron Richards
Subject: RE: Vallejo Center Duct Smoke Detector

Darcy,

The letter from AlphaTech provided clarification in general terms, but not in specific terms.

The purpose of this writing is to try and resolve what appears to be a roadblock to progress in the interpretation and installation of the Duct Detector requirements.

The AlphaTech letter states that to determine the number of Duct Detectors needed, both Div 15 and Div 16 need to be considered. I would agree with that statement, However, that means that the Contractor would have to make an interpretation of the drawings and applicable code to determine what is actually required. To insure there is a "meeting of the minds" of what the contractors interpretation is for what is required and what the Architects/EE design intent and interpretation is, It is imperative that there be clarity on this issue to ensure that the contractor installs what the EE intended.

Since noone is willing to step to the plate and make that Specific clarification, I will. Furthermore I request a confirmation from you and/or AlphaTech that this interpretation meets their design intent.

It is my interpretation and understanding of the contract documents that the Duct Detectors shown on the approved Electrical drawings, E4.11, E4.12, and E4.21 mirror and cover the requirements of duct detection shown on the Mechanical drawings M2.11, M2.12, and M2.21. The specific installation location for those duct detectors is a field coordination issue of the Contractor for code compliance for the mechanical systems installed under the mechanical section. Therefore, If the contractor follows Electrical drawing sheets, E4.11, E4.12, and E4.21, Including applicable IB's and RFI's that have subsequently been issued, and meets the performance criteria of specification section 15900 for shutdown of the heat pump units upon smoke detection, He will have complied with the requirements of the Mechanical drawing sections, and therefore complied with both mechanical and electrical sections.

It is true that there is a discrepancy in the electrical drawings as to the quantity of duct detectors identified. There is a five(5) duct detector discrepancy between the single line diagram (E4.00)quantity and the quantity shown on the combined sheets of E4.11, E4.12, and E4.21. I have reviewed the electrical drawings, and in fact the single line diagram E4.00 indicates 59 total duct detectors prior to the issuance of IB-10 and RFI-260, which would make for a total of 64 duct detectors after IB-10 and RFI-260. The combined floor plan electrical sheets indicate only 54 detectors with a total of 59 duct detectors with IB-10 and RFI-260 included. My view is that the total duct detection shown on the Electrical floor plan fire alarm drawing sheets E4.11, E4.12, and E4.21 meet the duct detection intent for both mechanical and electrical sections and therefore 59 should be the correct total reasonable interpretation.

Please confirm that this is a reasonable interpretation of the contract documents to move forward with completion of this scope of work.

Sincerely,
Ronald K. Richards
KITCHELL CEM

DIFFUSER AND REGISTER SIZING TABLE

TAG	NECK SIZE	CFM RANGE
CD-01	8"ø	0-210
CD-01	10"ø	211-325
CD-01	12"ø	326-425
CD-01	14"ø	426-600
CD-01	16"ø	601-800

NOTES:
ALL CEILING SUPPLY DIFFUSERS SHALL BE OF TYPE CD-01 UNLESS OTHERWISE NOTED. SEE SHEET M4.01 FOR DIFFUSER, GRILLE AND REGISTER SCHEDULE.

LOUVER HAD TO BE LOCATED OVER WINDOW IN ORDER TO NOT COMPROMISE ACOUSTIC WALL ON GRID 12.8 DO YOU HAVE ANY OTHER SOLUTION? 12.8

COPY FROM SUBMITTAL E0222-15050-1 COORDINATION SHOP DRAWINGS

RFI-037

1 M2.21 **SECOND FLOOR MECHANICAL PLAN-BUILDING A**
1/8"=1'-0"

APPROVAL STAMP
IDENTIFICATION STAMP 2B-10
DIVISION OF THE STATE ARCHITECT
APPL 02- 107417
AC — FLS EL SS 4/23
DATE: 4/23/07

ADD	INFORMATION BULLETIN #10	03/22/07
1	DSA APPROVAL SET	12/08/05
NO.	ISSUED FOR	DATE

REGISTERED PROFESSIONAL ENGINEER
RONALD D. CLARK
M20617
Exp. 8/30/07
MECHANICAL
STATE OF CALIFORNIA
CERTIFIED BY

K M D
KAPLAN McLAUGHLIN DIAZ
ARCHITECTURE PLANNING
222 VALLEJO SAN FRANCISCO, CA 94111
(415) 398-5191 FAX (415) 394-7158

alfatech_logo_Final small bw.jpg

120 MONTGOMERY STREET, SUITE 715 415-403-3000
SAN FRANCISCO, CALIFORNIA 94104 FAX 415-788-8040
SAN JOSE • NEW JERSEY • SINGAPORE • AUSTRALIA
AT Project No. 20431

SCCD
VALLEJO CENTER
Contract # A003.6123.01.V1

PROJECT NO. 419-201
DATE 12-08-05

SECOND FLOOR MECHANICAL PLAN BUILDING A
AS BUILTS

M2.21

PLOT DATE:

COPYRIGHT © 2004 BY KMD (KAPLAN McLAUGHLIN DIAZ). ALL RIGHTS RESERVED.

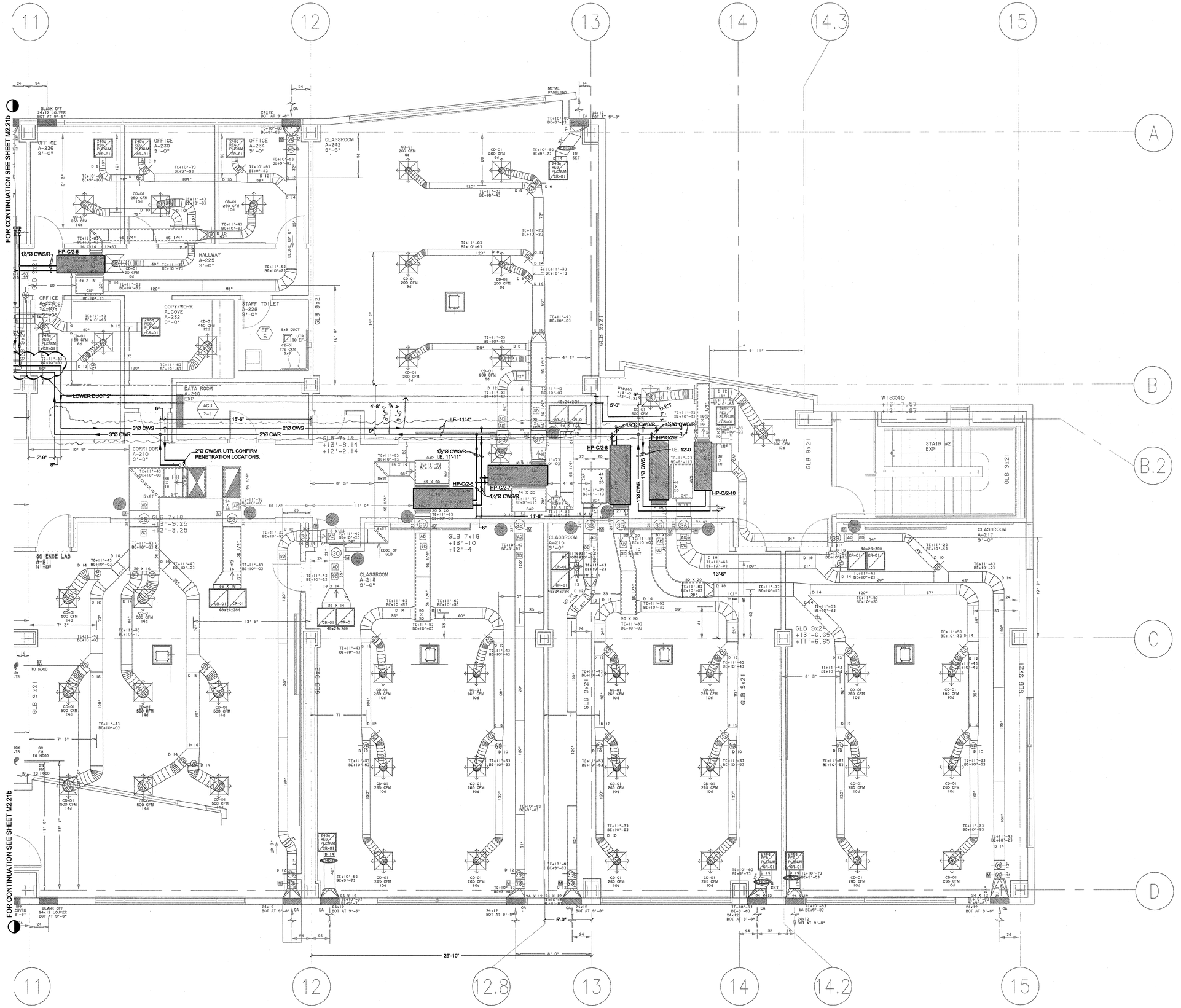

1 PARTIAL 2nd FLOOR MECHANICAL PIPING PLAN

SCALE: 1/4" = 1'-0"

DOWDLE & SONS MECHANICAL
100 TOWER ROAD
AMERICAN CANYON, CA. 94503
STATE CONTRACTORS LICENSE NO. 542743
PHONE (707) 224-6968

NO.	DATE:	REVISION:

PARTIAL SECOND FLOOR MECHANICAL
PIPING PLAN BUILDING 'A'

VALLEJO EDUCATION CENTER
SLOANL COMMUNITY COLLEGE DISTRICT

545 COLUMBUS PARKWAY
VALLEJO, CALIFORNIA 94591

DATE: SEPTEMBER 17, 2006
SCALE: 1/4" = 1'-0"
DRAWN BY: AJ
REF DWG: MP2.11
JOB NO: AS BUILTS
DRAWING NO.: M2.21a

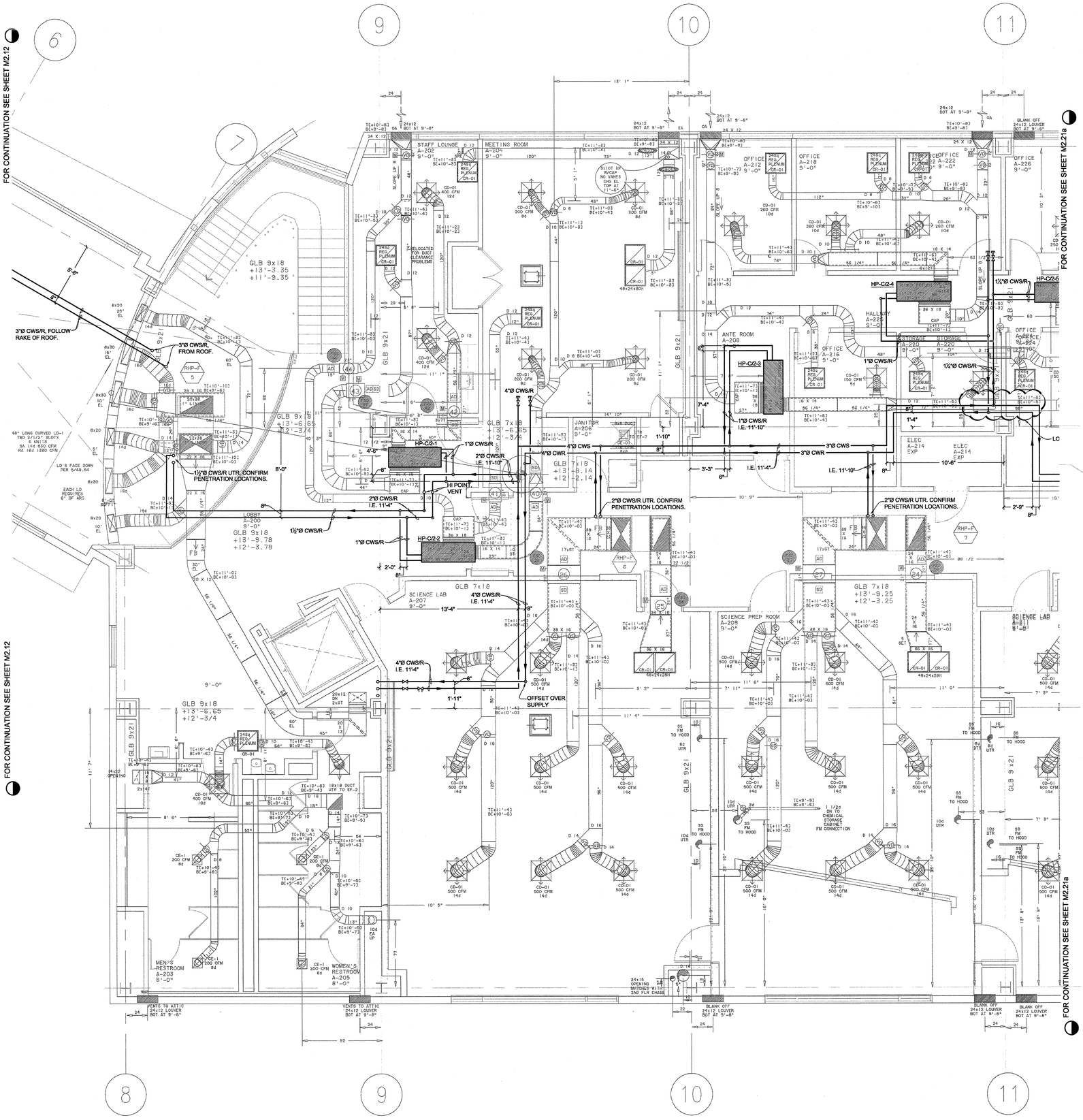

1 PARTIAL 2nd FLOOR MECHANICAL PIPING PLAN BLDG 'A'

SCALE: 1/4" = 1'-0"

Dowdle & Sons Mechanical, Inc.
Industrial • Commercial
License No. 542743
Piping • Plumbing

DOWDLE & SONS MECHANICAL
100 TOWER ROAD
AMERICAN CANYON, CA. 94503
STATE CONTRACTORS LICENSE NO. 542743
PHONE (707) 224-6966

NO.	DATE:	REVISION:

PARTIAL SECOND FLOOR MECHANICAL PIPING PLAN BUILDING 'A'

VALLEJO EDUCATION CENTER
SLOANL COMMUNITY COLLEGE DISTRICT

545 COLUMBUS PARKWAY
VALLEJO, CALIFORNIA 94591

DATE: SEPTEMBER 17, 2006
SCALE: 1/4" = 1'-0"
DRAWN BY: AJ
REF DWG: MP2.21
JOB NO. AS BUILTS
DRAWING NO.: M2.21b

1 PARTIAL ROOF MECHANICAL PIPING PLAN BLDG 'B'
SCALE: 1/4" = 1'-0"

Dowdle & Sons
INDUSTRIAL • COMMERCIAL
License No. 542743
MECHANICAL INC
PIPING • PLUMBING

DOWDLE & SONS MECHANICAL
100 TOWER ROAD
AMERICAN CANYON, CA. 94503
STATE CONTRACTORS LICENSE NO. 542743
PHONE (707) 224-6968

NO.	DATE:	REVISION:

PARTIAL ROOF MECHANICAL PIPING
PLAN BUILDING 'B'

VALLEJO EDUCATION CENTER
SLOANL COMMUNITY COLLEGE DISTRICT

545 COLUMBUS PARKWAY
VALLEJO, CALIFORNIA 94591

DATE: SEPTEMBER 17, 2006
SCALE: 1/4" = 1'-0"
DRAWN BY: AJ
REF DWG: MP2.22
JOB NO. AS BUILTS-
DRAWING NO.: M2.22

NOTES:

1. FOR GENERAL NOTES, SEE M0.1.
2. CONTRACTOR SHALL COORDINATE MECHANICAL SHOP DRAWINGS WITH ALL TRADES SO AS TO NOT ROUTE ANY CONDUIT, WIRING PIPING DUCTWORK, OR OTHER BUILDING SYSTEM UNDER HEAT PUMPS OR HEAT PUMP ACCESS LOCATIONS.

KEY NOTES:

1. SEAL PENETRATION AIR AND WATER TIGHT.
2. 30x18 SUPPLY AIR DUCT FROM ROOF CURB, SEE M2.12 FOR CONTINUATION.
3. 30x18 RETURN AIR DUCT FROM ROOF CURB,SEE M2.12 FOR CONTINUATION.
4. ROOFTOP WATER SOURCE HEAT PUMP (PROVIDE CONDENSER WATER SUPPLY/RETURN CONNECTIONS, CONDENSATE DRAINAGE, 14" ROOF CURB)
5. SUPPLY/RETURN AIR DUCT DOWN THROUGH ROOF, SAME SIZE AS MFR. OUTLET CONNECTION THROUGH ROOF CURB. SSD FOR FRAMING.
6. ROOFTOP WATER SOURCE HEAT PUMP (PROVIDE CONDENSER WATER SUPPLY/RETURN CONNECTIONS, CONDENSATE DRAINAGE, 30" ROOF CURB).

RFI-024

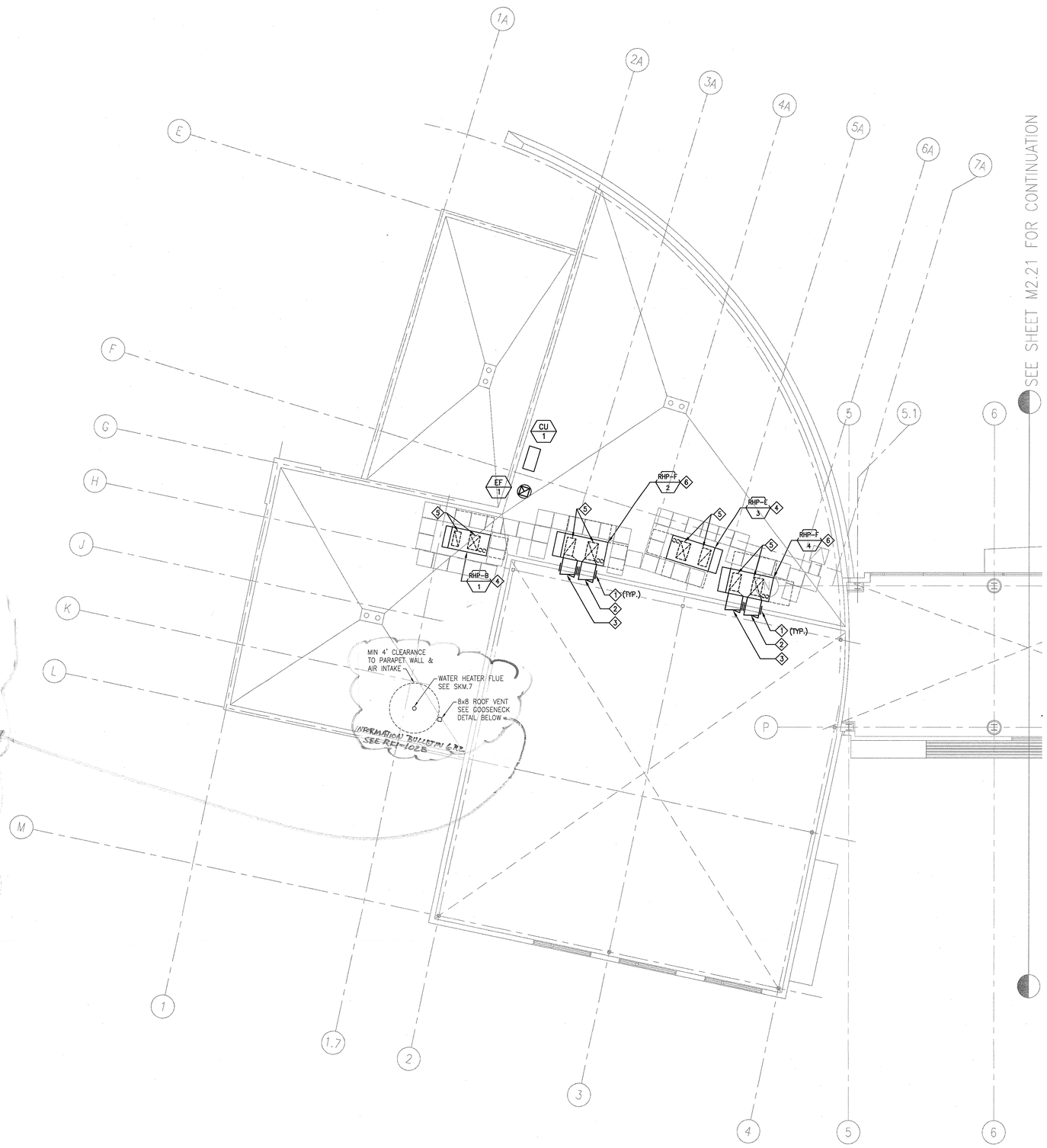

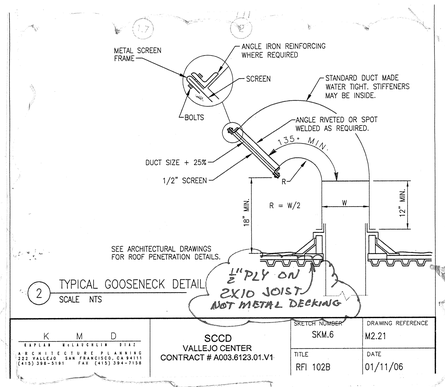

2 TYPICAL GOOSENECK DETAIL
SCALE NTS

K M D KAPLAN McLAUGHLIN DIAZ 222 VALLEJO SAN FRANCISCO, CA 94111 (415) 398-5191 FAX (415) 394-7158	SCCD VALLEJO CENTER CONTRACT # A003.6123.01.V1	SKETCH NUMBER SKM.6	DRAWING REFERENCE M2.21
		TITLE RFI 102B	DATE 01/11/06

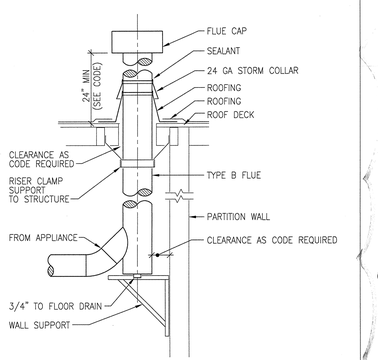

1 BOILER FLUE THRU ROOF SEE RFI-102B
SCALE NTS INFORMATION BULLETIN 6R2

K M D KAPLAN McLAUGHLIN DIAZ 222 VALLEJO SAN FRANCISCO, CA 94111 (415) 398-5191 FAX (415) 394-7158	SCCD VALLEJO CENTER CONTRACT # A003.6123.01.V1	SKETCH NUMBER SKM.7	DRAWING REFERENCE M6.5
		TITLE RFI 102B	DATE 01/10/06

1 / M2.22 MECHANICAL ROOF PLAN- BUILDING B
1/8"=1'-0"

APPROVAL STAMP
IDENTIFICATION STAMP
DIVISION OF THE STATE ARCHITECT
APP. 02- 107417
AC FLS SS
DATE: 12/21/05

NO.	ISSUED FOR	DATE
1	DSA APPROVAL SET	12/08/05

REGISTERED PROFESSIONAL ENGINEER GEORGE A. ARELLANO No. M29691 Exp. 06-30-06 Mechanical STATE OF CALIFORNIA
Date Signed 12/06/05
CERTIFIED BY

K M D
KAPLAN McLAUGHLIN DIAZ
ARCHITECTURE PLANNING
222 VALLEJO SAN FRANCISCO, CA 94111
(415) 398-5191 FAX (415) 394-7158

ALFATECH
120 MONTGOMERY STREET, SUITE 710 415-403-3000
SAN FRANCISCO, CALIFORNIA 94104 FAX: 415-788-0040
SAN JOSE • NEW JERSEY • SINGAPORE • AUSTRALIA
AT Project No. 3K231

SOLANO COMMUNITY COLLEGE

SCCD
VALLEJO CENTER
Contract # A003.6123.01.V1

PROJECT NO.	DATE
419-201	12-08-05

MECHANICAL ROOF PLAN BUILDING B
AS BUILTS

M2.22

PLOT DATE:

COPYRIGHT © 2004 BY KMD (KAPLAN McLAUGHLIN DIAZ). ALL RIGHTS RESERVED.

NOTES:

1. FOR GENERAL NOTES, SEE M0.1.
2. FOR PIPE THRU ROOF DETAIL, SEE DETAIL 6/A8.53.
3. FOR DUCT THRU ROOF DETAIL, SEE DETAIL 1/A8.51.

KEY NOTES:

1. ROOFTOP WATER SOURCE HEAT PUMP (PROVIDE CONDENSER WATER SUPPLY/RETURN CONNECTIONS, CONDENSATE DRAINAGE, 24" ROOF CURB)
2. SUPPLY/RETURN AIR DUCT DOWN THROUGH ROOF, SAME SIZE AS MFR. OUTLET CONNECTION THROUGH ROOF CURB. SSD FOR FRAMING.

SEE SHEET MP2.22 FOR CONTINUATION

VFD (CT-1)
VTR
EF 6
EF 7
RHP-F 8
RHP-F 7
RHP-F 6
RHP-F 5
CT 1
M6.05
3 M6.05 (TYP)
2 (TYP.)
CU 2-1
CU 1-1
CU 1-2
SA 1
SA 2
SA 3
EF 1 (1,500 CFM)
EF 2
EF 3 (1,500 CFM)
EF 4 (1,500 CFM)
EF 5 (1,800 CFM)
8ø DTR
10ø DTR
12ø
3" CWS & CWR DN TO CLG. SPACE. SEE MP2.21 FOR CONT.
2" DRAIN (SPD)
3" OVERFLOW (SPD)
2" MAKE-UP (SPD)
5" COLD CWR (TYP. 2 DOWN LOW)
5" WARM CWR (TYP. 2 UP HIGH)
4" CWR DOWN (285.5 GPM)
5" CWR DOWN (419.5 GPM)
6"ø FLUE
12"ø FLUE

1 M2.31 MECHANICAL ROOF PLAN-BUILDING A
1/8"=1'-0"

APPROVAL STAMP
IDENTIFICATION STAMP
DIVISION OF THE STATE ARCHITECT
APP 10- 107417
AC FLS SS
DATE: 12/21/05

NO.	ISSUED FOR	DATE
1	DSA APPROVAL SET	12/08/05

REGISTERED PROFESSIONAL ENGINEER GEORGE L. AREVALO No. M29691 Exp. 06-30-06 Mechanical STATE OF CALIFORNIA
Date Signed 12/06/05
CERTIFIED BY

K M D
KAPLAN McLAUGHLIN DIAZ
ARCHITECTURE PLANNING
222 VALLEJO SAN FRANCISCO, CA 94111
(415) 398-5191 FAX (415) 394-7158

ALFATECH
120 MONTGOMERY STREET, SUITE 715 415-403-3000
SAN FRANCISCO, CALIFORNIA 94104 FAX: 415-788-6040
SAN JOSE • NEW JERSEY • SINGAPORE • AUSTRALIA
AT Project No. 204231

SOLANO COMMUNITY COLLEGE

SCCD
VALLEJO CENTER
Contract # A003.6123.01.V1

PROJECT NO.	DATE
419-201	12-08-05

MECHANICAL ROOF PLAN BUILDING A
AS BUILTS

M2.31

PLOT DATE:

COPYRIGHT © 2004 BY KMD (KAPLAN McLAUGHLIN DIAZ). ALL RIGHTS RESERVED.

DOWDLE & SONS MECHANICAL
100 TOWER ROAD
AMERICAN CANYON, CA. 94503
STATE CONTRACTORS LICENSE NO. 642743
PHONE (707) 224-6868

Dowdle & Sons MECHANICAL INC. PIPING • PLUMBING INDUSTRIAL • COMMERCIAL License No. 642743

NO.	DATE	REVISIONS:

PARTIAL ROOF MECHANICAL PIPING PLAN BLDG 'A'

VALLEJO EDUCATION CENTER
SLOANE COMMUNITY COLLEGE DISTRICT
545 COLUMBUS PARKWAY
VALLEJO, CALIFORNIA 94591

DATE: SEPTEMBER 17, 2008
SCALE: 1/4" = 1'-0"
DRAWN BY: AJ
REF DWG: M2.31
AS BUILTS:
DRAWING NO: M2.31b

1 PARTIAL ROOF MECHANICAL PIPING PLAN BLDG 'A'
SCALE: 1/4" = 1'-0"

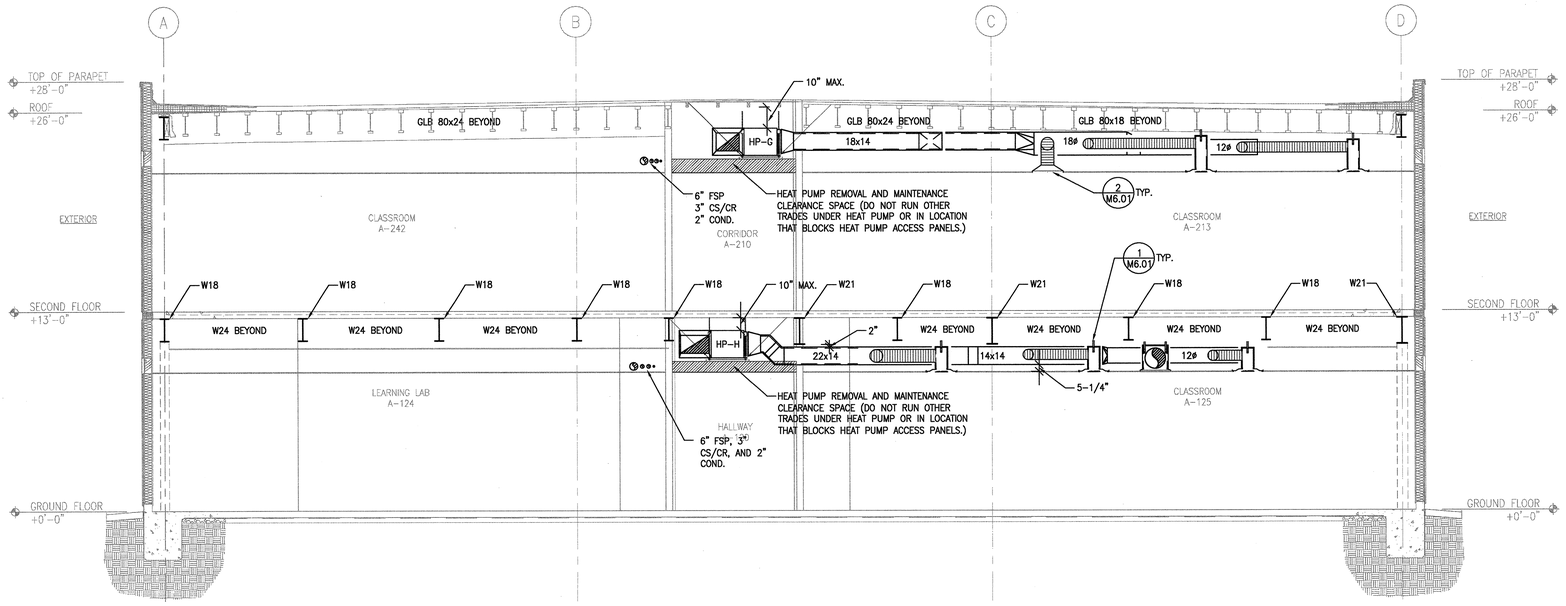

1 M3.01 MECHANICAL SECTION-BUILDING A
1/4"=1'-0"

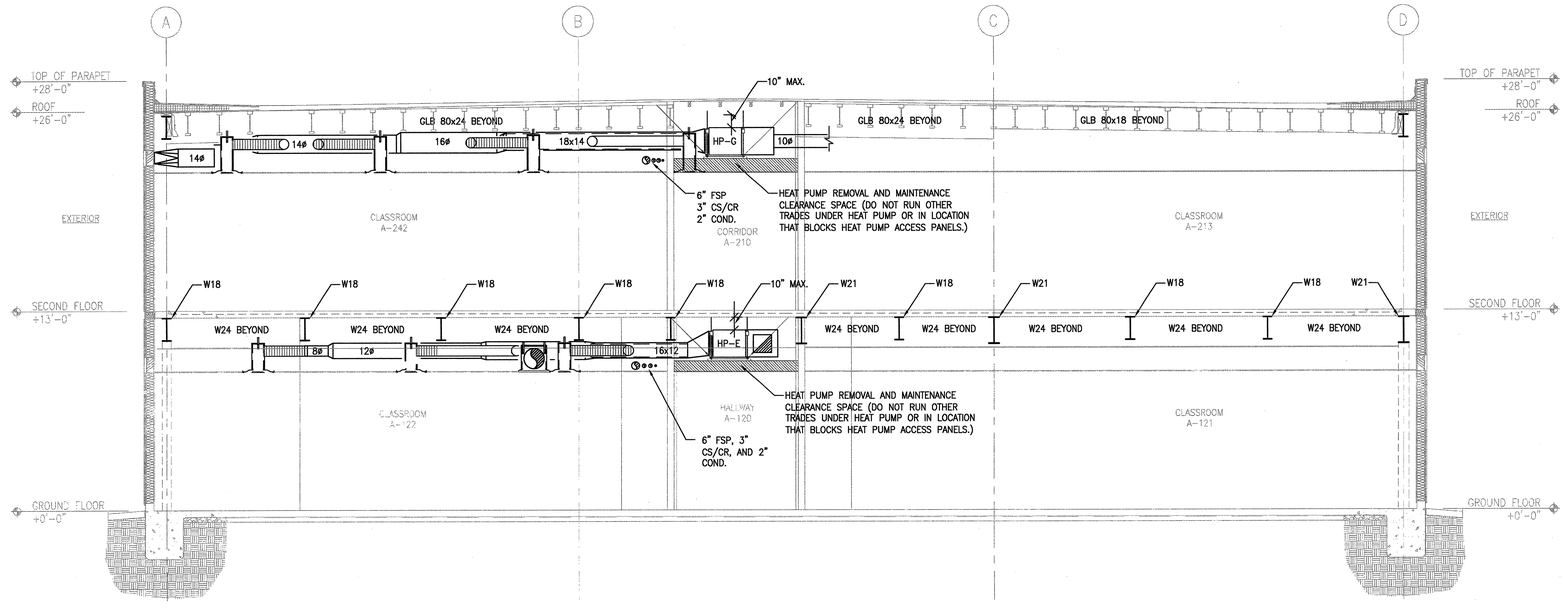

2 M3.01 MECHANICAL SECTION-BUILDING A
1/4"=1'-0"

APPROVAL STAMP
IDENTIFICATION STAMP
DIVISION OF THE STATE ARCHITECT
APPL. NO. 107417
AC FLS TH SS
DATE: 12/21/05

NO.	ISSUED FOR	DATE
1	DSA APPROVAL SET	12/08/05

REGISTERED PROFESSIONAL ENGINEER GEORGE L. ARELLANO No. M29691 Exp. 06-30-06 Mechanical STATE OF CALIFORNIA
Date Signed 12/06/05
CERTIFIED BY

K M D
KAPLAN McLAUGHLIN DIAZ
ARCHITECTURE PLANNING
222 VALLEJO SAN FRANCISCO, CA 94111
(415) 398-5191 FAX (415) 394-7158

ALFATECH
120 MONTGOMERY STREET, SUITE 715 415-403-3000
SAN FRANCISCO, CALIFORNIA 94104 FAX: 415-788-6040
SAN JOSE • NEW JERSEY • SINGAPORE • AUSTRALIA
AT Project No. 204231

SOLANO COMMUNITY COLLEGE

SCCD
VALLEJO CENTER
Contract # A003.6123.01.V1

PROJECT NO.	DATE
419-201	12-08-05

MECHANICAL SECTIONS
BUILDING A
AS BUILTS

M3.01

PLOT DATE:

COPYRIGHT © 2004 BY KMD (KAPLAN McLAUGHLIN DIAZ). ALL RIGHTS RESERVED.

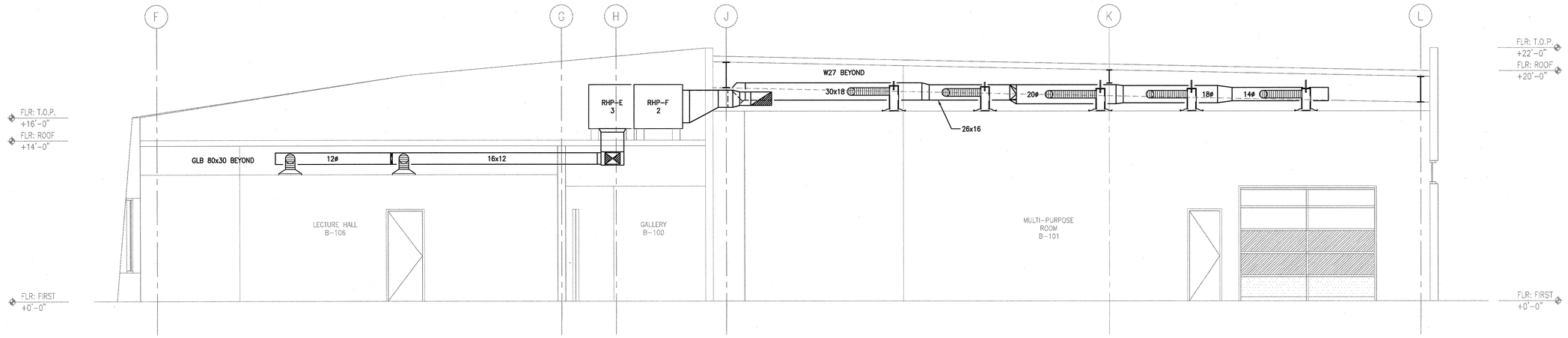

1 M3.02 **MECHANICAL SECTION-BUILDING B**
1/4"=1'-0"

APPROVAL STAMP
IDENTIFICATION STAMP
DIVISION OF THE STATE ARCHITECT
APPL. NO. 107417
AC FLS TH SS
DATE: 12/21/05

NO.	ISSUED FOR	DATE
1	DSA APPROVAL SET	12/08/05

REGISTERED PROFESSIONAL ENGINEER
GEORGE L. ABELLANO
No. M29691
Exp. 06-30-06
Mechanical
STATE OF CALIFORNIA

CERTIFIED BY
Date Signed 12/06/05

K M D
KAPLAN McLAUGHLIN DIAZ
ARCHITECTURE PLANNING
222 VALLEJO SAN FRANCISCO, CA 94111
(415) 398-5191 FAX (415) 394-7158

ALFATECH
120 MONTGOMERY STREET, SUITE 715 415-403-3000
SAN FRANCISCO, CALIFORNIA 94104 FAX 415-788-8040
SAN JOSE • NEW JERSEY • SINGAPORE • AUSTRALIA
AT Project No. 204251

SOLANO COMMUNITY COLLEGE

SCCD
VALLEJO CENTER
Contract # A003.6123.01.V1

PROJECT NO.	DATE
419-201	12-08-05

MECHANICAL SECTIONS
BUILDING B
AS BUILTS

M3.02

PLOT DATE:

COPYRIGHT © 2004 BY KMD (KAPLAN McLAUGHLIN DIAZ). ALL RIGHTS RESERVED.

COMPUTER ROOM AIR CONDITIONING UNITS

DESIGNATION	MANUFACTURER'S MODEL NO.	INTERIOR DESIGN CONDITIONS			FAN DATA				COOLING DATA						ELECTRIC REHEAT COIL DATA			HUMIDIFIER DATA			ELECTRICAL DATA					WEIGHT (LBS)	MINIMUM BRANCH PIPE SIZE (IN.)	REMARKS
		ROOM TEMP. DB (°F)	ROOM TEMP. WB (°F)	RELATIVE HUMIDITY (% RH)	QTY. OF FANS	MINIMUM E.S.P. (IN. H2O)	AIRFLOW (CFM)	MOTOR POWER (HP)	MIN. TOTAL CAPACITY (BTUH)	MIN. SENS. CAPACITY (BTUH)	COMP. TYPE	COMP. QTY.	LIQUID HOT GAS LINES	COND. DRAIN CONN.	MIN. TOTAL CAPACITY (BTUH)	MIN. TOTAL INPUT (KW)	NO. OF STEPS	TYPE	MINIMUM CAPACITY (LBS/HR)	MIN. TOTAL INPUT (KW)	V/ø	FLA	WSA	EMERGENCY POWER (Y/N)			
CRAC-1	STULZ CHS-040-AR	75	62.5	45%	1	0.3	1410	1/2	32,080	29,650	SCROLL	1	1/2"-7/8" ⑧	7/8" ⑧	–	–	–	–	–	–	460/3	7.4	15	N	215	N/A	①②③④⑤⑥⑦⑧ (SERVICES SERVER ROOM) (3 TONS)
CRAC-2	STULZ CHS-040-AR	75	62.5	45%	1	0.3	1410	1/2	32,080	29,650	SCROLL	1	1/2"-7/8" ⑧	7/8" ⑧	–	–	–	–	–	–	460/3	7.4	15	N	215	N/A	①②③④⑤⑥⑦⑧ (SERVICES SERVER ROOM) (3 TONS)

NOTES:
① MFR. SHALL PROVIDE UNIT WITH:
a.) NOT USED
b.) CONDENSATE PUMP WITH SUMP.
c.) UNIT MOUNTED DISCONNECT SWITCH AND SINGLE POINT POWER CONNECTION.
d.) OVERFLOW SAFETY SWITCH ON DRAIN PAN
② CONTRACTOR SHALL INSTALL STRICTLY PER MFR.'S INSTALLATION REQUIREMENTS.
③ CEILING MOUNTED UNITS W1.5" SPRING ISOLATION.
④ PROVIDE INTERLOCK WIRING BETWEEN CRAC UNIT AND CU.
⑤ SEE CONDENSING UNIT SCHEDULE FOR AIR-COOLED CONDENSER.
⑥ ROUTE REFRIGERANT PIPING BETWEEN CRAC UNIT AND CONDENSING UNIT. VERIFY FINAL SIZES WITH MANUFACTURER.
⑦ FOR MOUNTING, SEE DETAIL 5/M6.05.
⑧ CONNECTION SIZE ONLY. CONTRACTOR TO CONFIRM ACTUAL REFRIGERANT PIPE SIZE.

FLUID COOLER SCHEDULE

MARK ⬡	MFR	MODEL	AIR CFM	AIR	WATER			FAN MOTOR				SPRAY PUMP		SUMP HEATER KW	OPER. WT. LBS.	REMARKS
				WB °F	EWT °F	LWT °F	GPM	QTY	RPM	HP	VOLTS- ø	GPM	HP			
CT-1	BAC	VFL072-310	47,640	66	90	80	375	1	1,750	30	460/3	284	1-1/2	7.0	15,190	①②③④⑤⑥

NOTES:
① STAINLESS STEEL SUMP.
② ELECTRIC WATER LEVEL CONTROL
③ PROVIDE UNIT CONTROL PANEL IN NEMA-3R ENCLOSURE.
④ PROVIDE VFD FOR FAN. (SEE ROOF PLAN FOR LOCATION)
⑤ INSTALL ON STEEL RAILS WITH SPRING ISOLATION. (MIN. 3" DEFLECTION)
⑥ SEE DETAIL 1/M6.05 FOR MOUNTING.

WATER SOURCE HEAT PUMP (HIGH EFFECIENCY UNITS)

MARK ⬡	MFR	MODEL	CFM	EXT. S.P. "W.G.	COOLING (80/63 EAT)					HEATING (60°F EAT)						EER AT ARI	COP AT ARI	ELECTRICAL		MAX. OPER. WT. (LBS.)	REMARKS
					TOTAL (MBTUH)	SENSIBLE (MBTUH)	EWT (°F)	LWT (°F)	FLOW (GPM)	P.D. (FT W.G.)	LAT (°F)	TOTAL (MBTUH)	EWT (°F)	LWT (°F)	FLOW (GPM)	P.D. (FT W.G.)	LAT (°F)			V/Ø/HZ	MCA/MFS		
HP-A	CLIMATE MASTER	TS/H018	530	0.75	18.5	15.5	80	90.8	4.2	2.9	52.9	20.7	60	52.0	4.2	2.9	96.2	16.8	5.9	208/1/60	12.8/15	252	① THROUGH ⑥⑧
HP-B	CLIMATE MASTER	TS/H018	620	0.75	18.5	15.5	80	90.8	4.2	2.9	56.9	20.7	60	52.0	4.2	2.9	90.9	16.8	5.9	208/1/60	12.8/15	252	① THROUGH ⑥⑧
HP-C	CLIMATE MASTER	TS/H024	820	0.75	26.2	19.5	80	90.4	6.0	5.1	58.0	28.7	60	52.4	6.0	5.1	92.4	17.0	5.3	208/1/60	20.3/30	266	① THROUGH ⑧
HP-D	CLIMATE MASTER	TS/H030	1,000	0.75	30.4	22.9	80	92.2	6.0	5.1	58.4	33.3	60	51.2	6.0	5.1	91.5	15.6	5.3	460/3/60	9.7/15	268	① THROUGH ⑧
HP-E	CLIMATE MASTER	TS/H036	1,150	0.75	34.8	28.0	80	92.3	6.8	6.4	56.0	37.6	60	51.0	6.8	6.4	92.2	17.6	5.8	460/3/60	9.7/15	327	① THROUGH ⑧
HP-F	CLIMATE MASTER	TS/H042	1,400	0.75	39.4	33.3	80	91.4	8.3	4.4	58.0	45.6	60	51.1	8.3	4.4	90.2	17.1	5.7	460/3/60	10.5/15	414	① THROUGH ⑧
HP-G	CLIMATE MASTER	TS/H048	1,650	0.75	49.8	38.5	80	93.4	9.0	5.3	58.4	56.3	60	50.1	9.0	5.3	91.6	15.9	5.2	460/3/60	15.8/20	416	① THROUGH ⑧
HP-H	CLIMATE MASTER	TS/H060	2050	0.75	63.6	49.6	80	93.6	11.3	4.3	57.6	66.2	60	50.7	11.3	4.3	89.9	16.4	5.2	460/3/60	18.9/23	441	① THROUGH ⑧
HP-I	CLIMATE MASTER	TS/H070	2,230	0.75	71.4	53.7	80	94.0	12.4	8.8	57.7	79.1	60	50.0	12.4	8.8	92.8	15.2	5.0	460/3/60	18.9/23	443	① THROUGH ⑧

NOTES:
① PROVIDE MPC CONTROL PACKAGE.
② PROVIDE "HOSE KIT ASSEMBLY". W/BALL VALVES AND PT PORTS.
③ ULTRA QUIET SOUND PACKAGE "MUTE PACKAGE" (SEE SPECIFICATIONS FOR SOUND RATINGS).
④ WHERE SHOWN ON PLUMBING PLAN, PROVIDE CONDENSATE PUMP FOR HP. PUMP SHALL BE LITTLE GIANT VCC-20. ROUTE CD UP HIGH. (120V POWER BY DIV. 16) CONDENSATE PUMP BY MECHANICAL CONTRACTOR.
⑤ UNIT SHALL BE PROVIDED WITH INTERNAL FACTORY-MOUNTED MOTORIZED TWO-WAY ISOLATION VALVE AND CIRCUIT SETTER.
⑥ PROVIDE ECM VARIABLE SPEED MOTOR
⑦ HANG UNITS WITH SPRING ISOLATORS (MIN. 1" DEFLECTION)
⑧ FOR DUCT SD SEE DETAILS 1&2/M7.01 AND 10/M6.02.

ROOFTOP WATER SOURCE HEAT PUMP (HIGH EFFECIENCY UNITS)

MARK ⬡	MFR	MODEL	CFM	EXT. S.P. "W.G.	COOLING						HEATING (70°F EAT)						EER AT ARI	COP AT ARI	ELECTRICAL		MAX. OPER. WT. (LBS.)	REMARKS
					TOTAL (BTUH)	SENSIBLE (BTUH)	EWT (°F)	LWT (°F)	FLOW (GPM)	P.D. (FT W.G.)	LAT (°F)	TOTAL (BTUH)	EWT (°F)	LWT (°F)	FLOW (GPM)	P.D. (FT W.G.)	LAT (°F)			V/Ø/HZ	MCA/MFS		
RHP-A	CLIMATE MASTER	RE-3	1,200	0.5	32,160	29,675	80	89.9	8	8.9	57.2	35,540	60	53.3	8	8.9	86.9	13.6	4.7	460/3/60	8.1/15	750	① THROUGH ⑥⑧⑨
RHP-B	CLIMATE MASTER	RE-4	1,600	0.5	43,800	40,910	80	89.1	11.5	13.2	56.4	46,500	60	53.7	11.5	13.2	86.4	14.7	5.0	460/3/60	9.8/15	800	① THROUGH ⑥⑧⑨
RHP-C	CLIMATE MASTER	RE-5	2,000	0.35	56,300	50,560	80	89.1	15	18.9	56.7	63,635	60	53.6	15	18.9	88.9	13.6	4.5	460/3/60	11.2/15	850	① THROUGH ⑥⑧⑨
RHP-D	CLIMATE MASTER	RE-7	2,600	0.3	75,565	64,200	80	89.3	20	10.7	57.2	85,700	60	53.6	20	10.7	90.0	13.2	4.3	460/3/60	15.6/25	900	① THROUGH ⑥⑧⑨
RHP-E	CLIMATE MASTER	RE-8	3,200	0.3	88,200	82,000	80	89.6	22	12.7	56.4	91,410	60	53.7	22	12.7	86.0	14.6	4.6	460/3/60	17.5/20	1,100	① THROUGH ⑥⑧⑨
RHP-F	CLIMATE MASTER	RE-10	4,000	0.3	113,800	101,800	80	89.3	30	19.7	56.5	123,055	60	54.0	30	19.7	88.0	13.5	4.1	460/3/60	20/25	1,150	① THROUGH ⑥⑧⑨

NOTES:
① PROVIDE MPC CONTROL PACKAGE. DISCONNECT BY MFR.
② PROVIDE "HOSE KIT ASSEMBLY". W/BALL VALVES AND PT PORTS.
③ ULTRA QUIET SOUND PACKAGE.
④ ROUTE CD TO CODE APPROVED LOCATION.
⑤ UNIT SHALL BE PROVIDED WITH INTERNAL FACTORY-MOUNTED MOTORIZED TWO-WAY ISOLATION VALVE AND CIRCUIT SETTER.
⑥ MOUNT UNIT ON SPRING ISOLATED CURB (2" DEFLECTION); DOWN DISCHARGE, U.O.N.
⑦ PROVIDE 0-100% MODULATING ECONOMIZER.
⑧ FOR DUCT SD SEE 1&2/M7.01.
⑨ SEE DETAIL 3/M6.05 FOR MOUNTING.

CONDENSING BOILER SCHEDULE

MARK ⬡	MFR	MODEL	TYPE	MEDIUM	FLUID	GPM	INPUT (MBH)	OUTPUT (MBH)	COMB. EFF.	WATER TEMP.		△P (FT. W.G.)	GAS PRES. (IN W.C.)	ELECTRICAL		WATER CAPACITY (GAL.)	OPERATING WEIGHT LBS.	REMARKS
										ENT. °F	LVG. °F			AMPS	V/HZ/PH			
B-1	CLEAVER BROOKS	MCF-1500	COPPER FIN FORCED DRAFT	NAT. GAS	WATER	65	1,500	1,450	97%	60	100	0.5	7.0	4	220/60/1	108	2,900	①②③④⑤⑥⑦⑧

NOTES:
① BOILERS SHALL BE COMPLETED WITH:
- CALIFORNIA APPROVED CONTROLS (CSD-D)
- FULL MODULATION BURNER
- START/STOP CONTACTS AND FLOW SWITCH
- HIGH LIMIT AND LOW WATER CUTOFF W/ RESET AND TEST BUTTON
- COMMON ALARM RELAY
- FM APPROVED
- ASME SAFETY VALVE, COMBINATION PRESS./TEMP. GAUGE

② DIVISION 16 SHALL PROVIDE SEPARATE 120V CKT. FOR BOILER CONTROL PANEL.
③ INSTALL ON MIN. 4" HIGH CONC. PAD WITH 1/4" NEOPRENE WAFFLE PADS.
④ PROVIDE BMS INTERFACE.
⑤ PROVIDE TYPE AL29-4C VENT FLUE THROUGH ROOF. (POSITIVE PRESS. CAT. 4)
⑥ INTEGRAL VFD FAN MOTOR.
⑦ PROVIDE 1.5 GALLON NEUTRALIZATION TANK WITH LIME CHIPS FOR BOILER FLUE DRAIN AND BOILER DRAIN (COORDINATE WITH MFR.)
⑧ FOR MOUNTING SEE DETAIL 4/M6.04 & 4/M6.05

SOUND ATTENUATOR SCHEDULE

MARK ⬡	MFR	MODEL	SIZE	INSERTION LOST	SERVICE	REMARKS
SA-1	IAC	–	–		EF-3	①
SA-2	IAC				EF-4	
SA-3	IAC				EF-5	

NOTE: ① PACKLESS, LOW PRESS. DROP

EXPANSION TANK SCHEDULE

MARK ⬡	MFR	MODEL	REQUIRED CAPACITY		PER TANK CAP.		SERVICE	OPERATING WEIGHT LBS.	FILL PRESSURE PSIG	MAXIMUM PRESSURE PSIG	MINIMUM TEMP. (°F)	MAXIMUM TEMP. (°F)	REMARKS
			ACCEPT VOL	TANK VOL	ACCEPT VOL	TANK VOL							
ET-1	TACO	CX30	1.78	4	5	8	CONDENSING WATER	82	60	120	60	90	①② (CONDENSER WATER)

NOTES:
① CONTRACTOR SHALL PROVIDE FINAL CALCULATION AFTER EQUIPMENT SUBMITTALS AND PIPING SHOP DRAWING LAYOUT ARE COMPLETE, TO VERIFY FIELD CONDITIONS MATCH DESIGN ASSUMPTIONS.
② NPT SYSTEM CONNECTIONS, .302"-.32" CHARGING VALVE, CONSTRUCTED PER ASME BOILER/PRESSURE VESSEL CODE.

AIR SEPARATOR SCHEDULE

MARK ⬡	SERVICE	MANUFACTURER MODEL	MIN. GPM	INLET SIZE (IN)	MAX. P.D. (FT. H O)2	MAX. OPER. WEIGHT (LBS)	ANCHOR DETAIL	REMARKS
AS-1	CONDENSER WATER	TACO AC5F	375	5	1.0	–		NO STRAINER

NOTES:

CONDENSING UNIT SCHEDULE

MARK ⬡	AC SYSTEM NUMBER	MFR	MODEL	OUTSIDE AIR T °F	ELECTRIC POWER		FAN MOTOR NO/HP	V/PH	OPERATING WEIGHT (LBS.)	REMARKS
					MCA	MFCB				
CU-1	CRAC-1	STULZ	HES036-L-A	100	2.5	15	1/4	208/1	150	① ② (SERVICES SERVER ROOM)
CU-2	CRAC-2	STULZ	HES036-L-A	100	2.5	15	1/4	208/1	150	① ② (SERVICES SERVER ROOM)

NOTE:
① INSTALL PER MFR'S INSTALLATION INSTRUCTIONS.
② PROVIDE REFRIGERANT PIPING AND ALL REQUIRED APPURTENANCES BETWEEN CONDENSING UNITS AND EVAPORATORS.
③ LOW AMBIENT HEAD PRESSURE CONTROL.
④ NEMA 3-R DISCONNECT SWITCH BY MFR.

PUMP SCHEDULE

MARK ⬡	MFR	MODEL	TYPE	MOTOR (PREM. EFF.)				PERFORMANCE		OPERATING WEIGHT (LBS)	PUMP EFF. (%)	REMARKS
				NOL BHP	NON-OVERLOADING HP	VOLT-ø	RPM	GPM	HEAD FT			
CWP-1	TACO	FI3011	BASE MOUNTED END-SUCTION	10.5	15.0	460/3	1,760	375	70	–	74	①②③
CWP-2	TACO	FI3011	BASE MOUNTED END-SUCTION	10.5	15.0	460/3	1,760	375	70	–	74	①②③
HWP-1	TACO	KV2011	IN-LINE	1.3	1-1/2	460/3	1,160	65	40	–	74	②③ VFD

NOTES:
① VFD FURNISHED BY DIV. 15, WIRED BY DIV. 16. (PROVIDE INVERTER DUTY MOTOR)
② PREMIUM EFFICIENT MOTOR.
③ OPEN DRIP PROOF MOTORS.

DIFFUSER, GRILLE AND REGISTER SCHEDULE

MARK ⬡	MFR	MODEL	SIZE	NECK	FINISH	SERVICE	BORDER	MATERIAL	REMARKS
CD-1	TITUS	PSS	24"x24" OR 12"x12"	SEE FLOOR PLANS	WHITE	SUPPLY	COORD. W/ RCP	STEEL	①②④
LD-1	TITUS	FL-25-JT	2.5" SLOT WIDTH 2 SLOT, 4'-0" LENGTH	SEE FLOOR PLANS	WHITE	SUPPLY	COORD. W/ RCP	STEEL	①②④
CR-1/CE-1	TITUS	PAR	24"x24" OR 12"x12"	SEE FLOOR PLANS	WHITE	RETURN	COORD. W/ RCP	STEEL	①②
DL-1	TITUS	T-700	SEE FLOOR PLANS	SEE FLOOR PLANS	WHITE	RETURN	COORD. W/ RCP	STEEL	③④
WR-1	TITUS	350 FL	SEE FLOOR PLANS	SEE FLOOR PLANS	WHITE	EXHAUST	COORD. W/ RCP	STEEL	③④

NOTE:
① COORDINATE EXACT LOCATION WITH LIGHTS, SPRINKLER HEADS, AND ARCH. RCP.
② USE BORDER TYPE 2 FOR SURFACE MOUNT IN HARD CEILINGS, BORDER TYPE 3 FOR LAY-IN.
③ COORDINATE WITH WALL ELEVATIONS
④ SEE FLOOR PLANS FOR NECK SIZES.

APPROVAL STAMP
IDENTIFICATION STAMP 16-10
DIVISION OF THE STATE ARCHITECT
APPL 02- 107417
AC ___ FLS EL SS
DATE: 4/23/07

NO.	ISSUED FOR	DATE
1	DSA APPROVAL SET	12/08/06
1	INFORMATION BULLETIN #10	02/22/07

REGISTERED PROFESSIONAL ENGINEER
JOHN D. CLARK
M20617
Exp. 6/30/07
MECHANICAL
STATE OF CALIFORNIA
CERTIFIED

K M D
KAPLAN McLAUGHLIN DIAZ
ARCHITECTURE PLANNING
222 VALLEJO SAN FRANCISCO, CA 94111
(415) 398-5191 FAX (415) 394-7158

alfatech_logo_Final small bw.jpg

120 MONTGOMERY STREET, SUITE 715 415-403-3000
SAN FRANCISCO, CALIFORNIA 94104 FAX 415-788-8040
SAN JOSE • NEW JERSEY • SINGAPORE • AUSTRALIA

AT Project No. 20021

SCCD
VALLEJO CENTER
Contract # A003.6123.01.V1

PROJECT NO. 419-201
DATE 12-08-05

MECHANICAL SCHEDULES
AS BUILTS

M4.01

PLOT DATE:

COPYRIGHT © 2004 BY KMD (KAPLAN McLAUGHLIN DIAZ). ALL RIGHTS RESERVED.

SPLIT-SYSTEM AIR CONDITIONING UNIT SCHEDULE

MARK ⬡	MANUFACTURER	SERVICE	EER	CAPACITY (BTUH)	INDOOR ("A") FAN-COIL UNIT									OUTDOOR ("B") CONDENSING UNIT									REMARKS
					MODEL	CFM (LOW–MED–HIGH)	SOUND (dB–A)	WEIGHT (LBS.)	ELECTRICAL					MODEL	AMBIENT TEMP. (°F)	SOUND (dB–A)	WEIGHT (LBS.)	ELECTRICAL					
									FLA	MAX. FUSE SIZE	VOLT	PH	HZ					MCA	MAX. FUSE SIZE	VOLT	PH	HZ	
ACU1–1/CU1–1	MITSUBISHI	I.T. CLOSET	10.5	22,800	MS24WN	400–485–565	–	40	1.1	15	115	1	60	MU24WN	95	46	160	22	25	208	1	60	①②③
ACU1–2/CU1–2	MITSUBISHI	ELECTRICAL ROOM	10.5	22,800	MS24WN	400–485–565	–	40	1.1	15	115	1	60	MU24WN	95	46	160	22	25	208	1	60	①②③
ACU2–1/CU2–1	MITSUBISHI	I.T. CLOSET	10.5	22,800	MS24WN	400–485–565	–	40	1.1	15	115	1	60	MU24WN	95	46	160	22	25	208	1	60	①②③

NOTES:

① PROVIDE UNIT WITH REMOTE CONTROLS AND WASHABLE FILTERS.

② COORDINATE REFRIGERANT PIPING AND CONDENSATE DRAIN WITH OTHER TRADES.

③ DISCONNECT/STARTER BY DIV. 16.

VIBRATION ISOLATION SCHEDULE

DESIGNATION	BASE AND ISOLATION			ANCHOR DETAIL	UNIT WEIGHT LBS.	REMARKS
	MFR.	MODEL	DEFLN. (IN.)			
CT–1	VIBREX	"RMLS–SB–EQ"	2"	–	SEE EQUIP SCH.	FULLY WELDED WF SUPPORT FRAME & SEISMIC SPRING ISOLATORS
RHP–A,B,C,D,E,G,H, & I	VIBREX	"VIC–EQ"	2"	–	SEE EQUIP SCH.	FULLY WELDED SEISMIC SPRING ISOLATED ROOF CURB
RHP–F	VIBREX	"RMUR–EQ–SH"	2"	–	SEE EQUIP SCH.	SEISMIC SPRING ISOLATORS W/STRUCTURAL SUPPORT RAILS
CU–1 & CU–2	VIBREX	"ICPG–EQ"	.20"	–	SEE EQUIP SCH.	NEOPRENE ISOLATION PAD W/ BEARING PLATE, RUBBER GROMMETS & ANCHORAGE
HP–A,B,C,D,E,F,G,H, & I	VIBREX	"HXA"	1"	–	SEE EQUIP SCH.	SPRING & RUBBER HANGERS W/SEISMIC CABLE RESTRAINTS
B–1, CWP–1, CWP–2, CU1–1,2,3 & CU2–1	VIBREX	"ICPG"	1/8"	–	SEE EQUIP SCH.	3/4" NEOPRENE PAD W/BEARING PLATE AND ANCHOR BOLT GROMMET
EF–3,4, & 5	VIBREX	"RMU–EQ–SH"	2"	–	SEE EQUIP SCH.	SEISMIC SPRING ISOLATORS

NOTES:

1. PROVIDE NEOPRENE GROMMET AND LOCK NUTS FOR ALL RESTRAINING BOLTS.
2. SEISMIC BRACE UNIT PER SMACNA GUIDELINES.
3. INSTALL PER MFR.'S DETAILS.
4. PROVIDE ALL DIRECTIONAL SNUBBERS FOR ALL SPRING MOUNTED EQUIPMENT.
5. PADS FOR BOILERS UNITS MUST HAVE GROMMETS SIMILAR TO VIBREX RG.
6. ISOLATION MFG. TO PROVIDE ALL ISOLATION AND GUIDES WITH TSEISMIC CALCULATION STAMPED BY CIVIL OR STRUCTURAL P.E.
7. INSPECTOR TO VERIFY ISOLATOR MODEL MATCHES REQUIRED LOADS.

FIRE/SMOKE DAMPER - AND VOLUME DAMPER SCHEDULE

MARK	MFR	MODEL	SLEEVE	U.L. RATING	REMARKS
FSD–1	RUSKIN	FSD–60	17"	UL555/555S	①②③④⑤⑥ (COMBINATION FIRE SMOKE DAMPER) (PROVIDE IN SUPPLY, RETURN, NON–HAZARDOUS EXHAUST DUCTS PENETRATING RATED PARTITIONS)
FSD–2	RUSKIN	FSD–36	17"	UL555/555S	①②③④⑤⑦ (COMBINATION FIRE SMOKE DAMPER) (PROVIDE IN SUPPLY, RETURN, NON–HAZARDOUS EXHAUST DUCTS PENETRATING RATED PARTITIONS)

NOTES:

① 165 °F LINKAGE

② SMOKE LEAKAGE CLASS ii, 1–1/2 HR. DAMPER

③ 120V ACTUATOR (POWER BY DIV. 16); PROVIDE END SWITCH

④ PROVIDE SMOKE DETECTORS WHERE INDICATED WITHIN 5'–0" OF FSD PER NFPA 72.

⑤ TIE–IN TO BUILDING LIFE SAFETY SYTEM BY DIV. 16.

⑥ PROVIDE IN MEDIUM PRESSURE DUCTWORK.

⑦ PROVIDE IN LOW PRESSURE DUCTWORK.

FAN SCHEDULE

MARK ⬡	MFR	MODEL	CFM	RPM	TSP	TYPE	BRAKE HP	ELECTRICAL		SERVICE	OPERATING WEIGHT LBS	REMARKS	EMERG. POWER (Y/N)
								HP	VOLT–ø				
EF–1	GREENHECK	GB161HP–5	1,200	1725	1.0	BELT DRIVE ROOF EXHAUST	0.36	1/2	208–1	RESTROOM	100	①②④⑤⑥⑦⑪⑬	N
EF–2	GREENHECK	GB180HP–7	1,700	1725	1.0	BELT DRIVE ROOF EXHAUST	0.46	1/2	208–1	RESTROOM	110	①②④⑤⑥⑦⑪⑬	N
EF–3	GREENHECK	SWB–212–15	1,500	2,341	2.5	BACKWARD INCLINED UTILITY FAN	0.92	1–1/2	460–3	HOODS	200	①②③④⑤⑦⑧⑨⑫	N
EF–4	GREENHECK	SWB–212–15	1,500	2,341	2.5	BACKWARD INCLINED UTILITY FAN	0.92	1–1/2	460–3	HOODS	200	①②③④⑤⑦⑧⑨⑫	N
EF–5	GREENHECK	SWB–213	1,800	2,082	2.5	BACKWARD INCLINED UNTILITY FAN	1.07	1–1/2	460–3	HOODS	200	①②③④⑤⑦⑧⑨⑫	N
EF–6	GREENHECK	G–065–G	100	1,300	0.25	DIRECT DRIVE ROOF EXHAUST	0.01	1/60	120–1	RESTROOM	14	①②④⑤⑥⑦⑩⑬	N
EF–7	GREENHECK	G–065–G	100	1,300	0.25	DIRECT DRIVE ROOF EXHAUST	0.01	1/60	120–1	JANITOR'S CLOSET	14	①②④⑤⑥⑦⑩⑬	N
EF–8	GREENHECK												N

NOTE:

① 5% BELT LOSS IS INCLUDED.

② AMCA CERTIFIED FOR AIRFLOW AND SOUND.

③ CONTRACTOR SHALL PROVIDE SPRING VIBRATION ISOLATION (1.5" MINIMUM) WITH BASE.

④ PROVIDE THERMAL OVERLOAD PROTECTION AND PREMIUM EFFICENT MOTORS.

⑤ PROVIDE EXTENDED LUBE LINES AND DRAIN CONNECTION.

⑥ PROVIDE HINGED ROOF CURB, TIE–DOWNS, ALUMINUM BIRD SCREEN, COUNTER BALANCING BDD.

⑦ DISCONNECT/STARTER BY DIV. 16.

⑧ ALUMINUM WHEEL CONSTRUCTION, SCROLL HOUSING, AND INLET CONE.

⑨ HINGED ACCESS DOORS.

⑩ ACOUSTICALLY LINE ENTIRE DUT RUN WITH 1" ACOUSTICAL LINING

⑪ MIN. 10'–0" OF 1" ACOUSTICAL DUCT LINING BETWEEN FAN AND FIRST GRILLE.

⑫ SEE DETAIL 10/M6.03 FOR MOUNTING.

⑬ SEE DETAIL 10/M6.04 FOR MOUNTING.

APPROVAL STAMP
IDENTIFICATION STAMP
DIVISION OF THE STATE ARCHITECT
APP. NO. 107417
AC FLS THE SS BVC
DATE: 12/21/05

NO.	ISSUED FOR	DATE
1	DSA APPROVAL SET	12/08/05

REGISTERED PROFESSIONAL ENGINEER
GEORGE L. ARELLANO
No. M29691
Exp. 06-30-06
Mechanical
STATE OF CALIFORNIA

Date Signed 12/06/05
CERTIFIED BY

K M D
KAPLAN McLAUGHLIN DIAZ
ARCHITECTURE PLANNING
222 VALLEJO SAN FRANCISCO, CA 94111
(415) 398–5191 FAX (415) 394–7158

ALFATECH
120 MONTGOMERY STREET, SUITE 710 415-403-3000
SAN FRANCISCO, CALIFORNIA 94104 FAX: 415-788-8040
SAN JOSE • NEW JERSEY • SINGAPORE • AUSTRALIA
AT Project No. 20431

SOLANO COMMUNITY COLLEGE

SCCD
VALLEJO CENTER
Contract # A003.6123.01.V1

PROJECT NO.	DATE
419–201	12–08–05

MECHANICAL SCHEDULES

AS BUILTS

M4.02

PLOT DATE:

COPYRIGHT © 2004 BY KMD (KAPLAN McLAUGHLIN DIAZ). ALL RIGHTS RESERVED.

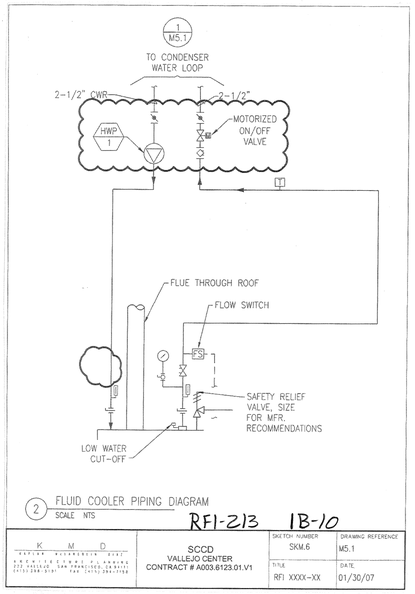

2 FLUID COOLER PIPING DIAGRAM
SCALE NTS

RFI-213 1B-10

K M D KAPLAN McLAUGHLIN DIAZ ARCHITECTURE PLANNING 222 VALLEJO SAN FRANCISCO, CA 94111 (415) 398-5191 FAX (415) 394-7158	SCCD VALLEJO CENTER CONTRACT # A003.6123.01.V1	SKETCH NUMBER SKM.6	DRAWING REFERENCE M5.1
		TITLE RFI XXXX-XX	DATE 01/30/07

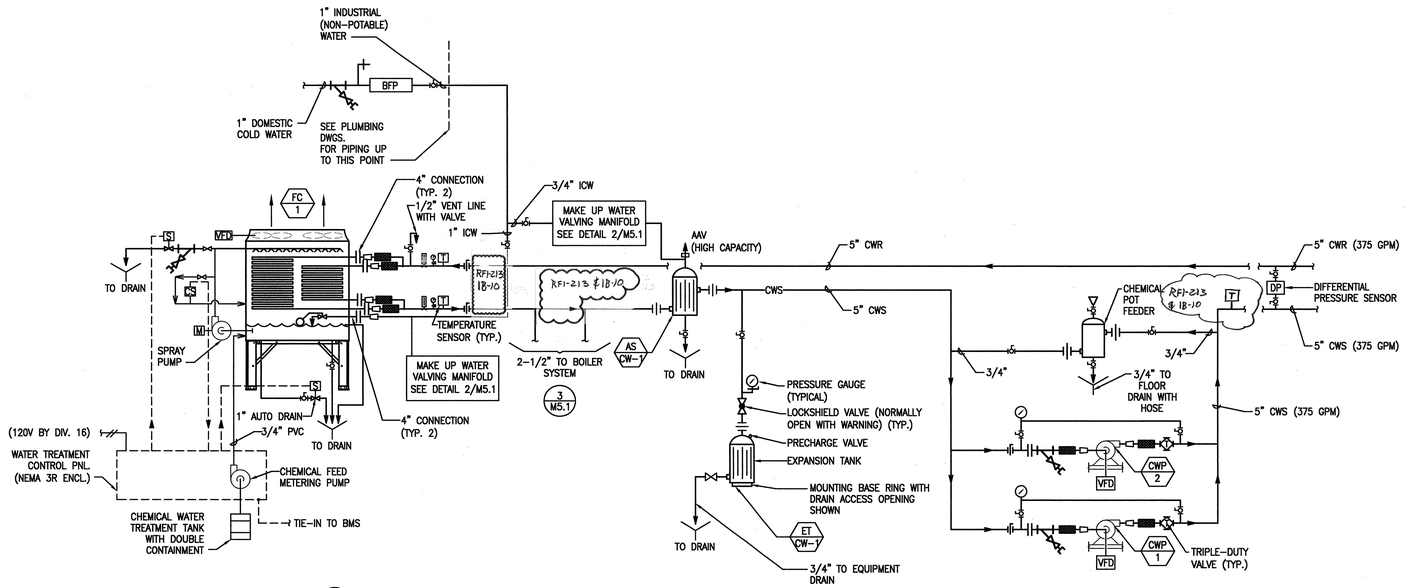

1 M5.1 FLUID COOLER PIPING DIAGRAM
NO SCALE

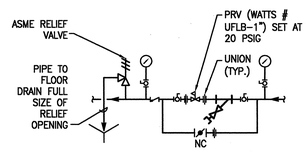

2 M5.1 MAKE-UP WATER AND SYSTEM FILL VALVING MANIFOLD
NO SCALE

SHEET NOTES:

1. COORDINATE MIN./MAX. FLOW RATES WITH MFR. OF BOILER.
2. 2-32 PSI CALIBRATED FLOW CONTROL VALVE (345 GPM).

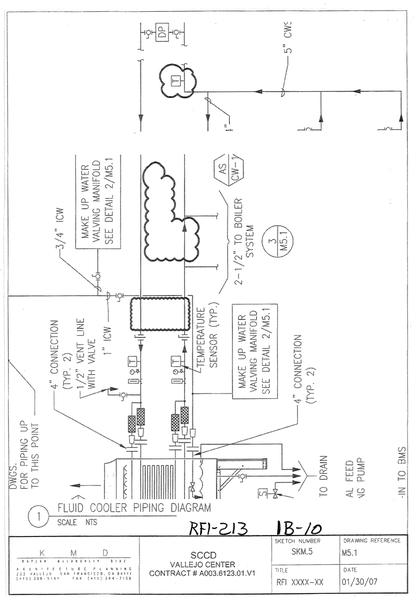

1 FLUID COOLER PIPING DIAGRAM
SCALE NTS

RFI-213 1B-10

K M D KAPLAN McLAUGHLIN DIAZ ARCHITECTURE PLANNING 222 VALLEJO SAN FRANCISCO, CA 94111 (415) 398-5191 FAX (415) 394-7158	SCCD VALLEJO CENTER CONTRACT # A003.6123.01.V1	SKETCH NUMBER SKM.5	DRAWING REFERENCE M5.1
		TITLE RFI XXXX-XX	DATE 01/30/07

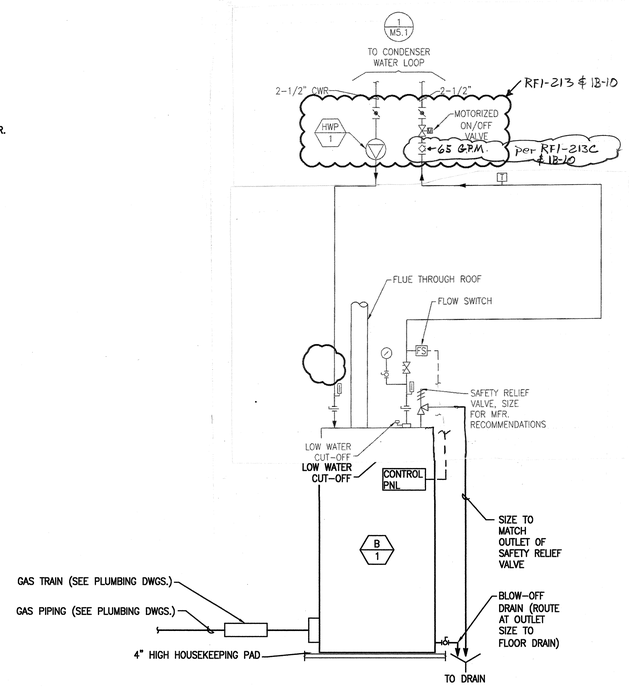

3 M5.1 HEAT PUMP BOILER SYSTEM PIPING DIAGRAM
NO SCALE

Dowdle & Sons Mechanical, Inc.
P.O. Box 3316
Napa, CA 94558
Ph: (707)224-6968

SEE Ralph Larsen & Son RFI-213
RFI

To: Jay Tucker
Ralph Larsen & Son, Inc.
300 8th Avenue
San Mateo, CA 94401-4221
Ph: 650 579-0339 Fax: 650 579-0349

RFI #: 3
Date: 12/14/2006
Job: 438 Vallejo Center for Solano CC
Phone: 707-649-8327

CC:

Subject: Bypass on 5" CWS & CWR

Drawing: 1/M5.01 and 1/M7.02
Cost Impact: Subject to Response

Spec Section:
Schedule Impact: Subject to Response

Request: Date Required: 12/21/2006
Detail #1 on M4.01 shows a Bypass on the ¾" CWS and CWR. On 1/M7.02 the Bypass is shown without a valve. Will a three way control valve at this location be required? DSM also has concerns that when the Condenser Water is in Bypass the water is not being treated through the Fluid Cooler. Is a Bypass necessary at the location shown? Please advise.

Requested by: Staci Freeman
Dowdle & Sons Mechanical, Inc

Response:
The bypass at cooling tower along with associated controls was eliminated per previous response to this RFI. A system bypass valve is added per attached sketch SKM.1 and associated controls are indicated on attached sketch SKM.4A. See attached sketch SKM.4 for sensor locations. These locations are now consistent with the piping diagram. Also the sketch SKM.4 reflects equipment locations that are consistent with the piping diagram.

A detailed revised operating sequence shall be submitted shortly.

The differential pressure transmitter DPT shall be located per attached sketch SKM.1A.

Dowdle & Sons Mechanical, Inc.
P.O. Box 3316
Napa, CA 94558
Ph: (707)224-6968

SEE Ralph Larsen & Son RFI-213
RFI

To: Jay Tucker
Ralph Larsen & Son, Inc.
300 8th Avenue
San Mateo, CA 94401-4221
Ph: 650 579-0339 Fax: 650 579-0349

RFI #: 4
Date: 12/14/2006
Job: 438 Vallejo Center for Solano CC
Phone: 707-649-8327

CC:

Subject: Calibrated Flow Control Valves

Drawing: Sheet Note 2/M5.01 and Detail 1/M5.01 and Others
Cost Impact: Subject to Response

Spec Section:
Schedule Impact: Subject to Response

Request: Date Required: 12/21/2006
Sheet Note 2 on M5.01 describes a 345 GPM Calibrated Flow Controls Valve. Detail 1 on the same page shows the 345 GPM Valve location. Sheet Note 1 on M5.01 shows a 20-65 GPM Modulating Control Valve. On M/P2.11 Detail 2 shows a plan view of the valves described above. DSM has a concern that the water will not be diverted through the boiler when heating is required. Please confirm that the drawing is correct and the system will function with the depicted valves.

Requested by: Staci Freeman
Dowdle & Sons Mechanical, Inc

Response:
345 GPM Calibrated Flow Control valve and 20-65 GPM Modulating Control Valve are deleted. A new hot water pump HWP-1 is added per sketches SKM.1A, SKM.2, and SKM.6. A motorized on/off valve is added per sketch SKM.6. The sketch also reflects a circuit setter. This scheme appears to assure required flow through the boiler loop. The controls are revised per attached sketch SKM.4.

A revised operating sequence shall be submitted shortly.

APPROVAL STAMP
IDENTIFICATION STAMP
DIVISION OF THE STATE ARCHITECT
APPL # 107417
AC FLS TH SS AL
DATE: 12/21/05

NO.	ISSUED FOR	DATE
1	DSA APPROVAL SET	12/08/05

REGISTERED PROFESSIONAL ENGINEER GEORGE L. ABELARD No. M29691 Exp. 06-30-06 STATE OF CALIFORNIA
Date Signed 12/06/05
CERTIFIED BY

K M D
KAPLAN McLAUGHLIN DIAZ
ARCHITECTURE PLANNING
222 VALLEJO SAN FRANCISCO, CA 94111
(415) 398-5191 FAX (415) 394-7158

ALFATECH
120 MONTGOMERY STREET, SUITE 715 415-403-5000
SAN FRANCISCO, CALIFORNIA 94104 FAX: 415-788-8040
SAN JOSE • NEW JERSEY • SINGAPORE • AUSTRALIA
ATProjects. 3021

SOLANO COMMUNITY COLLEGE

SCCD
VALLEJO CENTER
Contract # A003.6123.01.V1

PROJECT NO.	DATE
419-201	12-08-05

MECHANICAL DIAGRAMS

AS BUILTS

M5.01

PLOT DATE:

COPYRIGHT © 2004 BY KMD (KAPLAN McLAUGHLIN DIAZ). ALL RIGHTS RESERVED.

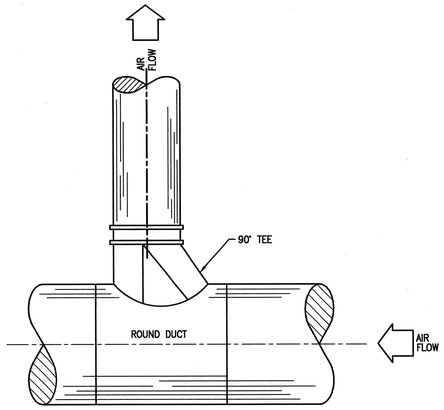

NOTE:
1. ALL BRANCH TAKE-OFFS SHALL HAVE A LOW LOSS FITTING WHETHER SHOW ON THE FLOOR PLAN OR NOT.

LOW-LOSS FITTING ROUND TO ROUND (10)

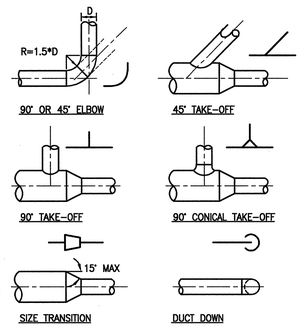

NOTES
1. SINGLE-LINE ILLUSTRATIONS ARE SYMBOLS USED ON DRAWINGS

ROUND DUCT DETAIL (7)

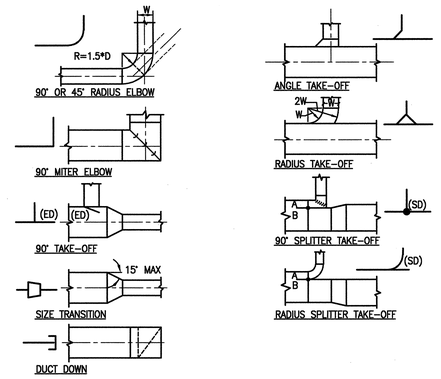

NOTES
1. SINGLE-LINE ILLUSTRATIONS ARE SYMBOLS USED ON DRAWINGS
2. SIZE A&B DIMENSIONS IN PROPORTION TO AIR QUANTITIES IN EACH LEG SPLIT

RECTANGULAR DUCT DETAIL (4)

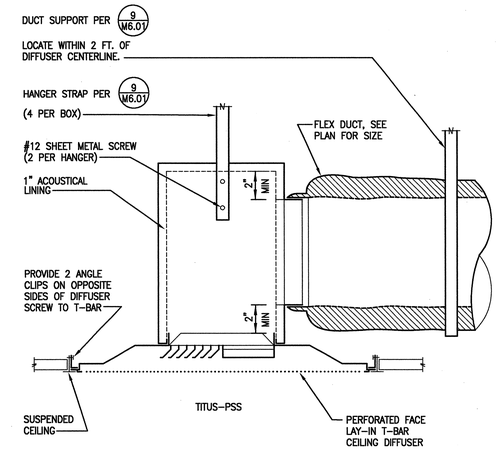

CEILING DIFFUSER CONNECTION (1)

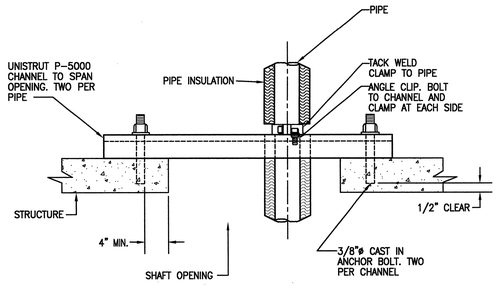

NOTES:
1. TYPICAL SUPPORT AT EACH FLOOR.
2. FOR MULTIPLE PIPES INSTALL CHANNELS IN PARALLEL AND PROVIDE ADDITIONAL FRAMING. SIZES OF FRAMING MEMBERS AS REQUIRED TO SUPPORT TOTAL WEIGHT OF PIPE.
3. INSULATE CLAMP AT CHILLED WATER PIPE ONLY.

PIPE RISER SUPPORT (11)

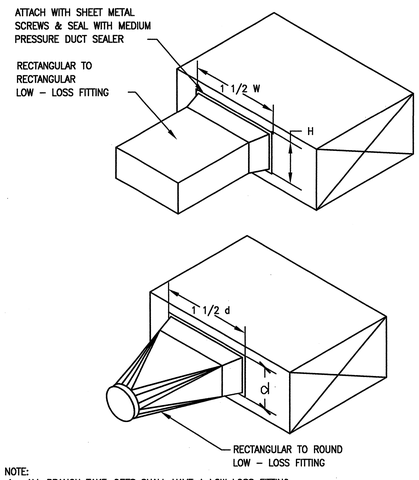

NOTE:
1. ALL BRANCH TAKE-OFFS SHALL HAVE A LOW LOSS FITTING WHETHER SHOW ON THE FLOOR PLAN OR NOT.

LOW-LOSS BRANCH DUCT CONNECTION (8)

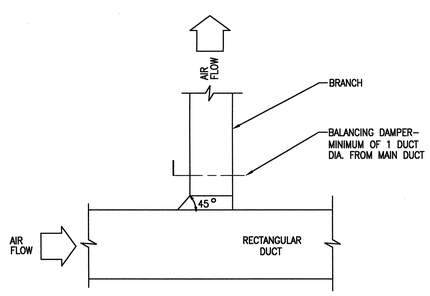

NOTE: 1. SHALL BE USED ON ALL DUCTS DOWNSTREAM AND UPSTREAM OF HEAT PUMPS

RETANGULAR SUPPLY BRANCH/LOW PRESSURE (5)

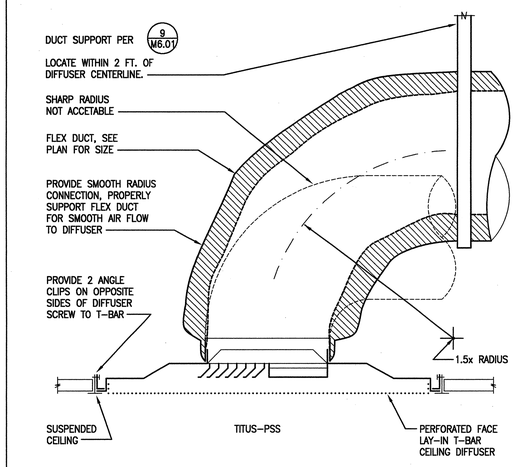

CEILING DIFFUSER CONNECTION (2)

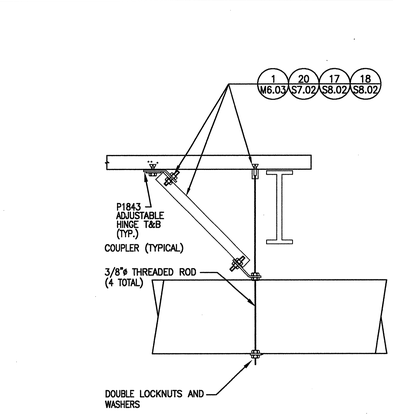

DUCT SUPPORT (9)

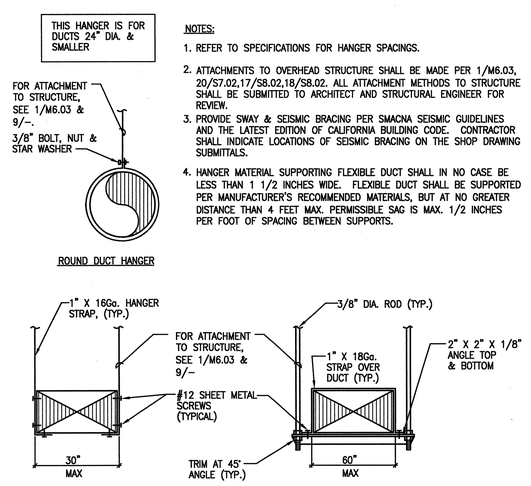

NOTES:
1. REFER TO SPECIFICATIONS FOR HANGER SPACINGS.
2. ATTACHMENTS TO OVERHEAD STRUCTURE SHALL BE MADE PER 1/M6.03, 20/S7.02,17/S8.02,18/S8.02. ALL ATTACHMENT METHODS TO STRUCTURE SHALL BE SUBMITTED TO ARCHITECT AND STRUCTURAL ENGINEER FOR REVIEW.
3. PROVIDE SWAY & SEISMIC BRACING PER SMACNA SEISMIC GUIDELINES AND THE LATEST EDITION OF CALIFORNIA BUILDING CODE. CONTRACTOR SHALL INDICATE LOCATIONS OF SEISMIC BRACING ON THE SHOP DRAWING SUBMITTALS.
4. HANGER MATERIAL SUPPORTING FLEXIBLE DUCT SHALL IN NO CASE BE LESS THAN 1 1/2 INCHES WIDE. FLEXIBLE DUCT SHALL BE SUPPORTED PER MANUFACTURER'S RECOMMENDED MATERIALS, BUT AT NO GREATER DISTANCE THAN 4 FEET MAX. PERMISSIBLE SAG IS MAX. 1/2 INCHES PER FOOT OF SPACING BETWEEN SUPPORTS.

DUCT SUPPORT (9)

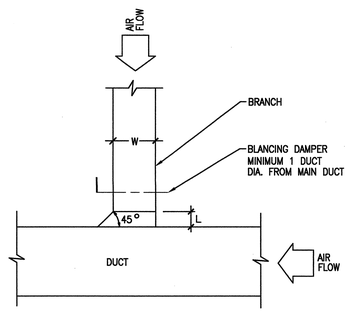

L=W/4 (4" MIN.)

LOW-LOSS FITTING RECTANGULAR TO RECTANGULAR (6)

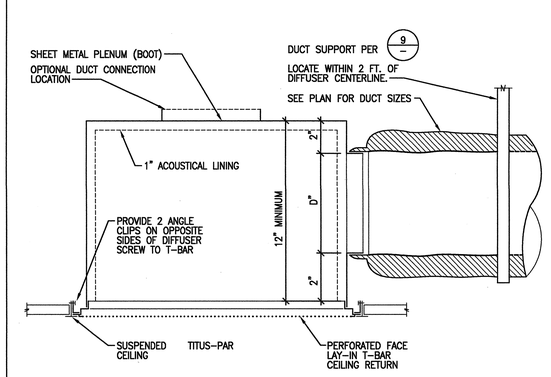

CEILING RETURN AND/OR RELIEF AIR CONNECTION (3)

APPROVAL STAMP
IDENTIFICATION STAMP
DIVISION OF THE STATE ARCHITECT
APP'D: 107417
AC: FLS SS
DATE: 12/21/05

NO.	ISSUED FOR	DATE
1	DSA APPROVAL SET	12/06/05

REGISTERED PROFESSIONAL ENGINEER GEORGE L. AREVALO No. M29691 Exp. 08-30-06 CIVIL STATE OF CALIFORNIA

Date Signed 12/06/05
CERTIFIED BY

K M D
KAPLAN McLAUGHLIN DIAZ
ARCHITECTURE PLANNING
222 VALLEJO SAN FRANCISCO, CA 94111
(415) 398-5191 FAX (415) 394-7158

ALFATECH
120 MONTGOMERY STREET, SUITE 715 415-403-3000
SAN FRANCISCO, CALIFORNIA 94104 FAX: 415-788-8040
SAN JOSE • NEW JERSEY • SINGAPORE • AUSTRALIA
ATProject No. 20431

SOLANO COMMUNITY COLLEGE

SCCD
VALLEJO CENTER
Contract # A003.6123.01.V1

PROJECT NO. 419-201
DATE 12-08-05

MECHANICAL DETAILS

AS BUILTS

M6.01

PLOT DATE:

COPYRIGHT © 2004 BY KMD (KAPLAN McLAUGHLIN DIAZ). ALL RIGHTS RESERVED.

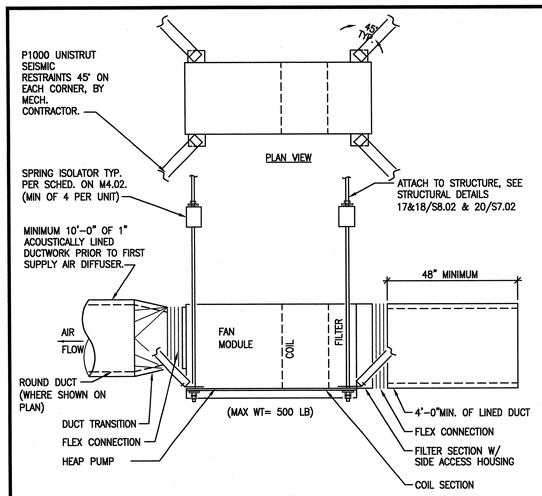

HEAT PUMP UNIT HANGING DETAIL (10)

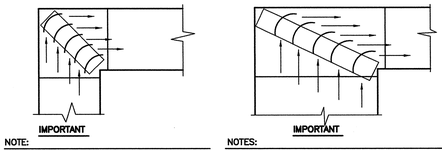

NOTE:
PROPER INSTALLATION OF TURNING VANES FOR RECTANGULAR ELBOW WITHOUT SIZE CHANGE. CAN USE EITHER DOUBLE OR SINGLE THICKNESS TURNING VANES IN THIS APPLICATION.

NOTES:
1. PROPER INSTALLATION OF TURNING VANES WHEN RECTANGULAR MITERED ELBOW CHANGES SIZE FROM INLET TO OUTLET, **DO NOT USE DOUBLE THICKNESS TURNING VANES IN THIS APPLICATION.**
2. VANES DO NOT HAVE "TRAILING EDGES," BUT SHALL BE MOVED IN THE VANE RUNNER TO REMAIN TANGENT TO THE AIRSTREAM.

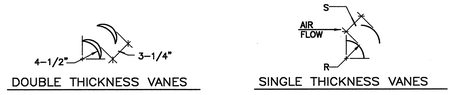

DOUBLE THICKNESS VANES — SINGLE THICKNESS VANES

DIMENSIONS, INCHES	
R	S
2.0	1.5
4.5	3.25

NOTES:
1. THESE DETAILS INDICATE ALLOWED TURNING VANES CONSTRUCTION AND INSTALLATION FOR ALL MITERED ELBOWS.
2. ALL VANES MUST BE INSTALLED. ELIMINATING EVERY OTHER VANE IS NOT ALLOWED.
3. SINGLE THICKNESS VANES CANNOT BE OVER 36" LONG WITHOUT INTERMEDIATE VANE RUNNER.
4. ALL VANES SHALL BE INSTALLED PER SMACNA AND SHALL BE FASTEN/SUPPORTED AS NECESSARY TO PREVENT VIBRATION AND TO MAINTAIN PROPER ALLIGNMENT AT THE DESIGN VELOCITY.

TURNING VANES DETAILS (7)

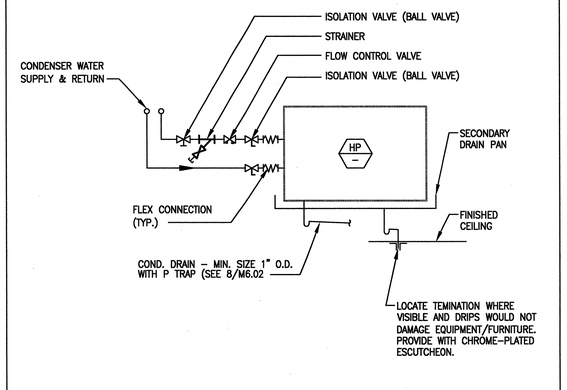

HEAT PUMP PIPING DETAIL (4)

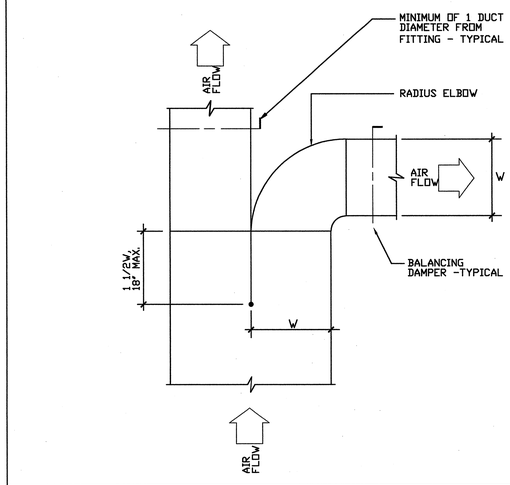

HORIZONTAL/VERTICAL DUCT SPLIT (1)

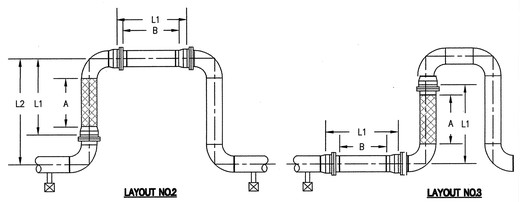

IN-LINE ARRANGEMENT

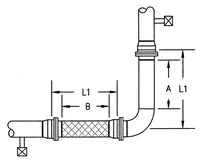

CORNER ARRANGEMENT

SCHEDULE FOR PIPING CROSSING SEISMIC JOINT WITH 4" MOVEMENT		
PIPE SIZE	MILMAC MODEL NUMBER	"L" DIMENSION
4"	BB 31533-64-II (3 REQUIRED PER LINE)	17"
3"	BB 31533-48-II (3 REQUIRED PER LINE)	21"
2"	BB 32006-32-24/FDA (3 REQUIRED PER LINE)	15"
1-1/2"	BB 32006-24-24/FDA	12"
1"	BB 32006-16-24/FDA	12"
3/4"	BB 32006-12-24/FDA	12"

SEISMIC JOINT WITH 4" MOVEMENT DETAIL (11)

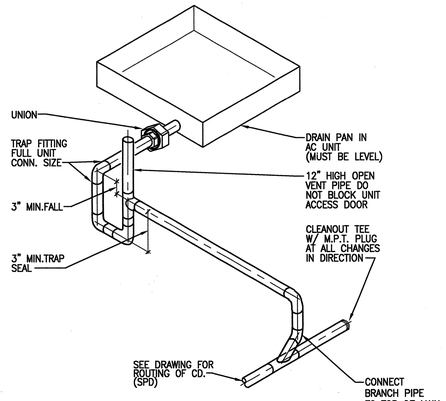

NOTE:
1. DRAIN LINE TO BE GALVANIZED STEEL IN MECHANICAL ROOMS AND WHERE EXPOSED AND MAY BE COPPER IN CONCEALED AREAS (ABOVE HUNG CEILINGS).
2. USE DWV FITTINGS.
3. CONNECT TO SANITARY SEWER THROUGH AIR GAP FITTING AND TRAP PRIMER (SPD).

CONDENSATE DRAIN (8)

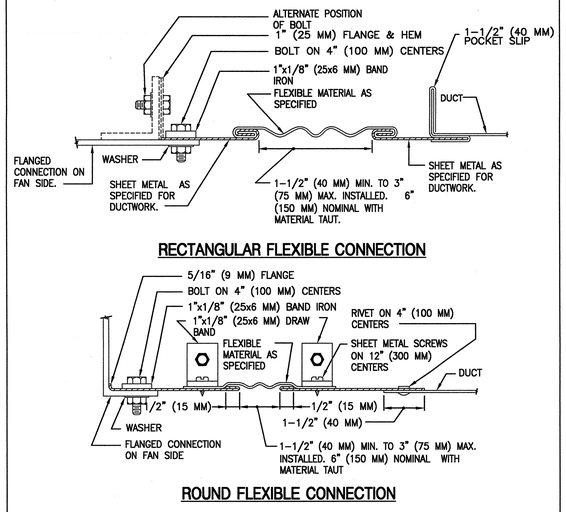

RECTANGULAR FLEXIBLE CONNECTION

ROUND FLEXIBLE CONNECTION

FLEXIBLE CONNECTION DETAILS (5)

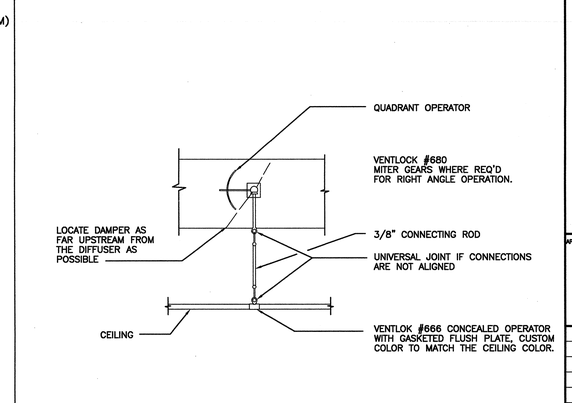

DUCTWORK REMOTE DAMPER OPERATOR (2)

A-1 MILMAC MULTIPLANE FLEXIBLE CONNETOR
FEMALE COPPER TUBE ENDS

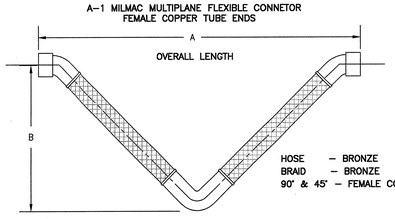

HOSE – BRONZE
BRAID – BRONZE
90° & 45° – FEMALE COPPER SWEAT

SCHEDULE FOR PIPING CROSSING SEISMIC JOINT WITH 4" MOVEMENT			
PIPE SIZE	MILMAC MODEL NUMBER	DIMENSION "A"	DIMENSION "B"
6"	V 206.0-4	69-5/8"	33-7/8"
4"	V 204.0-4	53-5/8"	26-1/4"
3"	V 203.0-4	46-7/8"	23"
2"	V 202.0-4	38-3/8"	18-3/4"
1-1/2"	V 51.5-4	34-1/2"	16-3/8"
1"	V 51.25-4	31-1/8"	14-3/4
3/4"	V 51.75-4	28-1/2"	13-5/8"

SEISMIC JOINT WITH 4" MOVEMENT DETAIL (12)

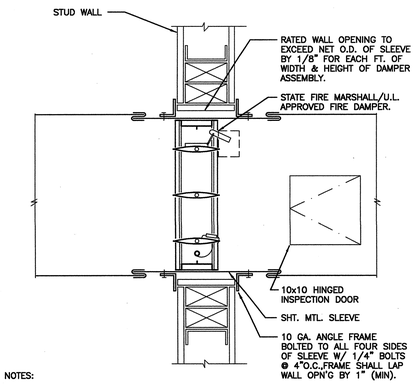

NOTES:
1. USE "UNITED DUCT SEALER" OR EQUAL WHERE DUCTS CONNECT TO SLEEVE.
2. IF ROUND DUCT, PROVIDE WELDED ROUND DUCT COLLAR ON BOTH SIDES. SIMILAR TO HIGH VELOCITY FIRE DAMPER. OPENING SIZE = DUCT SIZE + 1".

FIRE AND SMOKE DAMPER (9)

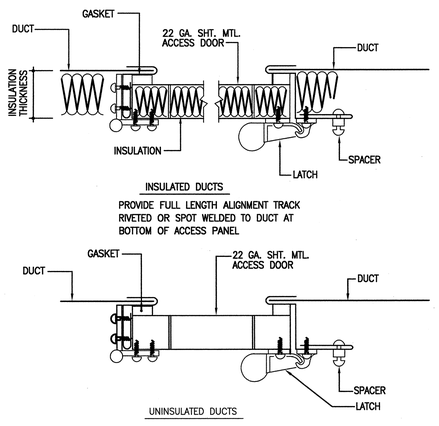

INSULATED DUCTS

PROVIDE FULL LENGTH ALIGNMENT TRACK RIVETED OR SPOT WELDED TO DUCT AT BOTTOM OF ACCESS PANEL

UNINSULATED DUCTS

DUCT ACCESS DOOR DETAIL (6)

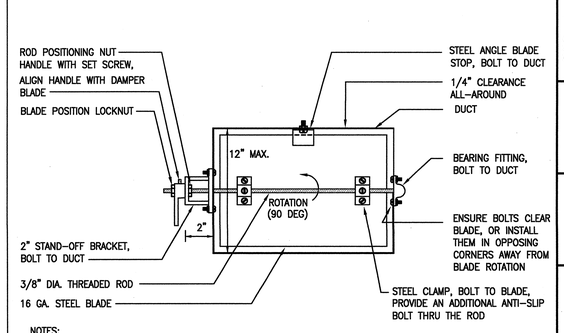

NOTES:
1. DAMPERS FOR ROUND DUCTS SHALL BE SIMILAR TO THE DAMPER SHOWN ABOVE.
2. ENSURE THAT FULL 90° DAMPER BLADE MOVEMENT IS UNOBSTRUCTED.
3. FOR DUCT HEIGHTS MORE THAN 12", PROVIDE FACTORY-FABRICATED OPPOSED BLADE DAMPERS
4. A MINIMUM OF 5'-0" OF LINED DUCT SHALL BE INSTALLED BETWEEN EACH DIFFUSER AND DAMPER.

MANUAL DAMPER (ADJUSTABLE SINGLE-BLADE BALANCING TYPE) (3)

APPROVAL STAMP
IDENTIFICATION STAMP
DIVISION OF THE STATE ARCHITECT
APP/APP- 107417
AC FLS SS
DATE: 12/21/05

NO.	ISSUED FOR	DATE
1	DSA APPROVAL SET	12/06/05

REGISTERED PROFESSIONAL ENGINEER GEORGE A. ARELLANO No. M29691 Exp. 09-30-06 MECHANICAL STATE OF CALIFORNIA
Date Signed 12/06/05
CERTIFIED BY

K M D
KAPLAN McLAUGHLIN DIAZ
ARCHITECTURE PLANNING
222 VALLEJO SAN FRANCISCO, CA 94111
(415) 398-5191 FAX (415) 394-7158

ALFATECH
120 MONTGOMERY STREET, SUITE 715 415-403-3000
SAN FRANCISCO, CALIFORNIA 94104 FAX 415-788-8040
SAN JOSE • NEW JERSEY • SINGAPORE • AUSTRALIA
AT Project No. 20031

SOLANO COMMUNITY COLLEGE

SCCD
VALLEJO CENTER
Contract # A003.6123.01.V1

PROJECT NO.	DATE
419-201	12-08-05

MECHANICAL DETAILS

AS BUILTS

M6.02

PLOT DATE:

COPYRIGHT © 2004 BY KMD (KAPLAN McLAUGHLIN DIAZ). ALL RIGHTS RESERVED.

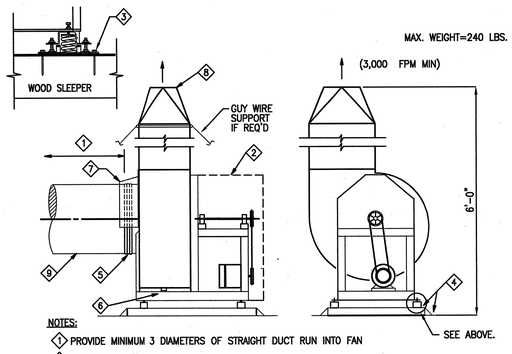

NOTES:

1. PROVIDE MINIMUM 3 DIAMETERS OF STRAIGHT DUCT RUN INTO FAN
2. WEATHER COVER
3. VIBRATION ISOLATOR–SEE VIBRATION ISOLATION SCHEDULE. PROVIDE 4–3/8"ø x4" LAG SCREW AS REQUIRED.
4. FOR FAN SUPPORT ATTACHMENT TO ROOF SEE ARCH. DRAWINGS 7/A8.51.
5. FLEXIBLE DUCT CONNECTION
6. SCROLL DRAIN
7. WEATHER SHIELD OVER FLEXIBLE DUCT CONNECTION. FASTEN TO FAN HOUSING
8. DISCHARGE WITH 1/2" BIRDSCREEN. PROVIDE DISCHARGE CONE FOR EF SERVING FUMEHOODS AND HAZARDOUS EXHAUST ONLY (SEE EF SCHEDULES). VELOCITY AT DISCHARGE CONE WILL BE ABOVE 3,000 FPM. TOP OF CONE SHALL EXTEND ONE DUCT DIAMETER ABOVE ROOF SCREEN OR 10FT. ABOVE ROOF IF THERE IS NO SCREEN.

EXAUST FAN DETAIL (10)

NOTES:

1. PROVIDE SUPPORT MINIMUM 4'–0" ON CENTER OR AS SHOWN ON DRAWINGS.

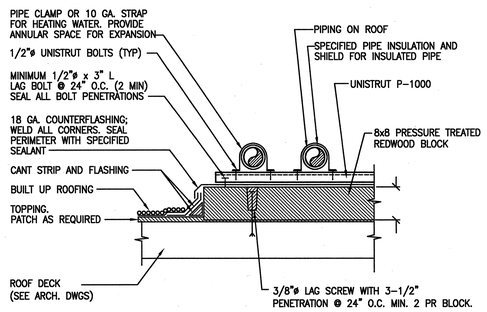

NOTE:
FOR ATTACHMENT TO ROOF DECK, SEE ARCH. DETAIL 1/A8.53

PIPE SUPPORT ON ROOF DETAIL (7)

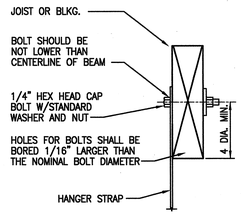

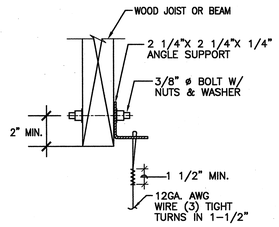

NOTE:
ATTACHMENTS TO OVERHEAD STRUCTURE SHALL BE MADE IN ACCORDANCE WITH STRUCTURAL ENGINEERS REQUIREMENTS AND WEIGHT LIMITATIONS. ALL ATTACHMENT METHODS TO STRUCTURE SHALL BE SUBMITTED TO ARCHITECT AND STRUCTURAL ENGINEER FOR REVIEW.

FOR OTHER ATTACHMENTS TO DECK/WOOD JOIST, SEE DETAILS AND ARCHITECTURAL DETAILSON SHEETS A8.51 & A8.52. (17 S8.02) (18 S8.02)

ATTACHMENT TO STRUCTURE (1)

NOT USED (8)

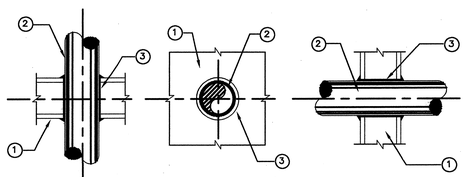

PACK SPACE BETWEEN PIPING AND PENETRATION OPENING WITH MATERIAL APPROVED BY UNDERWRITERS LABORATORIES FOR THROUGH PENETRATION FIRE STOP SYSTEMS. MATERIALS, METHODS, AND INSTALLATION SHALL BE IN ACCORDANCE WITH UL APPROVED LISTING AND SHALL BE DESIGNED TO ACT AS A FIRESTOP AS WELL AS A COLD SMOKE, NOXIOUS GAS AND WATER SEALANT. SUBMIT LISTING NUMBERS AND DETAILS FROM UL FIRE RESISTANT DIRECTORY FOR ALL SUCH SYSTEMS TO BE USED. INSULATE PIPES 3 FEET TO EITHER SIDE OF PENETRATION WITH MATERIAL SPECIFIED IN THE UL FIRE RESISTANCE DIRECTORY IF REQUIRED TO OBTAIN THE T– AND F– RATINGS.

1. WALL AND FLOOR
2. PIPE OR INSULATED PIPE
3. FIRE BARRIER – "3M PRODUCTS INC." FIRE BARRIER CAULK CP25 WB+, CP 25WB, CP 25 N/S AND S/L, FIRE BARRIER 2000+, 2000 AND 2003 SILICONE SEALANTS, MOLDABLE PUTTY.

USE FOLLOWING APPLICABLE UL SYSTEMS FOR THE CONSTRUCTION TYPES LISTED.

CONSTRUCTION TYPE	THROUGH PENETRATION FIRESTOP SYSTEM NUMBERS
CONCRETE FLOORS	CAJ1007 (F–2, 3, 4 HR; T–0 HR), CAJ1010 (F–2 HR; T–0 HR), CAJ1012 (F–1 HR; T–0 HR), CAJ1017 (F–2, 3 HR; T–0 HR), CAJ1021 (F–3 HR; T–0, 1.5 HR), CAJ1027 (F–3 HR; T–0 HR), CAJ1044 (F–2, 3, 4 HR; T–0 HR), CAJ1058 (F–3 HR; T–3 HR), CAJ1063 (F–3 HR; T–0.5 HR), CAJ1112 (F–2 HR; T–0 HR), CAJ1175 (F–2 HR; T–0 HR), CAJ5001 (F–1.5, 2, 3 HR; T–0, 0.5, 0.75, 1 HR), CAJ5002 (F–2, 3 HR; T–0, 0.5, 1 HR), CAJ5003 (F–2 HR; T–0.5, 1 HR), CAJ5024 (F–2, 3 HR; T–1, 1.5 HR), CAJ5060 (F–2, 3 HR; T–0, 0.75, 1, 1.5 HR), CBJ1020 (F–4 HR; T–0, 0.75, 1.5 HR)
CONCRETE OR MASONRY WALLS	CAJ1001 (F–3 HR; T–0 HR), CAJ1017 (F–2, 3 HR; T–0 HR), CAJ1021 (F–3 HR; T–0, 1.5 HR), CAJ1027 (F–3 HR; T–0 HR), CAJ1044 (F–2, 3, 4 HR; T–0 HR), CAJ1058 (F–3 HR; T–0 HR), CAJ1063 (F–3 HR; T–0.5 HR), CAJ1112 (F–2 HR; T–0 HR), CAJ1175 (F–2 HR; T–0 HR), CAJ5001 (F–1.5, 2, 3 HR; T–0, 0.5, 0.75, 1 HR), CAJ5002 (F–2, 3 HR; T–0, 0.5, 1 HR), CAJ5003 (F–2 HR; T–0.5, 1 HR), CAJ5024 (F–2, 3 HR; T–1, 1.5 HR), CAJ5060 (F–2, 3 HR; T–0, 0.75, 1, 1.5 HR), CBJ1020 (F–4 HR; T–0, 0.75, 1.5 HR)
GYPSUM WALLBOARD/ STUD WALLS	WL1001 (F–1, 2, 3, 4 HR; T–0, 1, 2, 3, 4 HR), WL1002 (F–1, 2 HR; T–0 HR), WL1003 (F–1, 2 HR; T–0 HR), WL2002 (F–1, 1.5, 2 HR, T–0.75, 1, 1.5, 2 HR), WL2003 (F–1, 2 HR; T–1, 2 HR), WL2004 (F–2 HR; T–0.75, 1.5, 2 HR), WL2005 (F–1, 2 HR; T–0, 0.75, 1, 1.5, 2 HR), WL5001 (F–1, 2 HR; T–1, 1.5 HR), WL5002 (F–1, 2 HR; T–1, 2 HR)

PIPE PENETRATION THRU FIRE RATED BARRIER DETAIL (9)

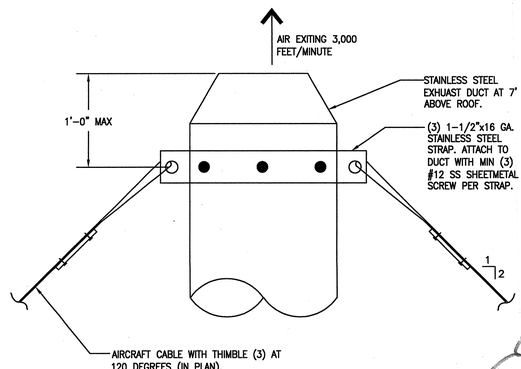

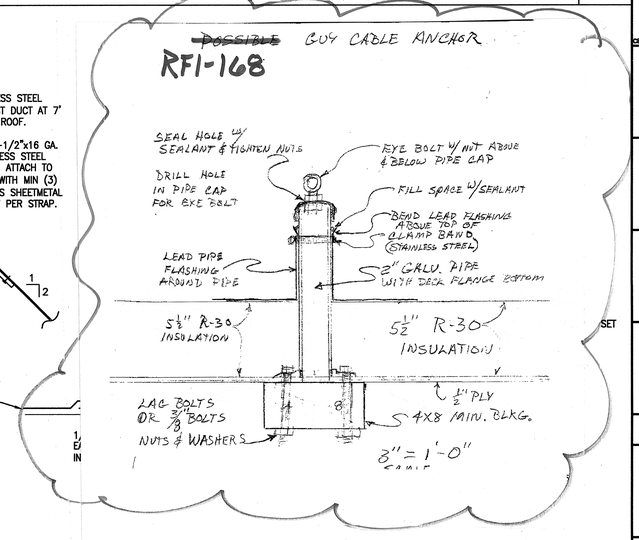

FUME HOOD EXHAUST STACK DETAIL (3)

APPROVAL STAMP
IDENTIFICATION STAMP
DIVISION OF THE STATE ARCHITECT
APP'D 107417
ACC'D FLS TH SS NC
DATE: 12/7/05

NO.	ISSUED FOR	DATE
1	DSA APPROVAL SET	12/08/05

REGISTERED PROFESSIONAL ENGINEER GEORGE L ABELLARD No. M29691 Exp. 06-30-06 Mechanical STATE OF CALIFORNIA

Date Signed 12/06/05
CERTIFIED BY

K M D
KAPLAN McLAUGHLIN DIAZ
ARCHITECTURE PLANNING
222 VALLEJO SAN FRANCISCO, CA 94111
(415) 398-5191 FAX (415) 394-7158

ALFATECH
120 MONTGOMERY STREET, SUITE 710 415-403-3000
SAN FRANCISCO, CALIFORNIA 94104 FAX: 415-788-8040
SAN JOSE • NEW JERSEY • SINGAPORE • AUSTRALIA
All Projects, Static

SOLANO COMMUNITY COLLEGE

SCCD
VALLEJO CENTER
Contract # A003.6123.01.V1

PROJECT NO.	DATE
419–201	12–08–05

MECHANICAL DETAILS
AS BUILTS

M6.03

PLOT DATE:

COPYRIGHT © 2004 BY KMD (KAPLAN McLAUGHLIN DIAZ). ALL RIGHTS RESERVED.

CURB MOUNTED EXHAUST FAN (10)

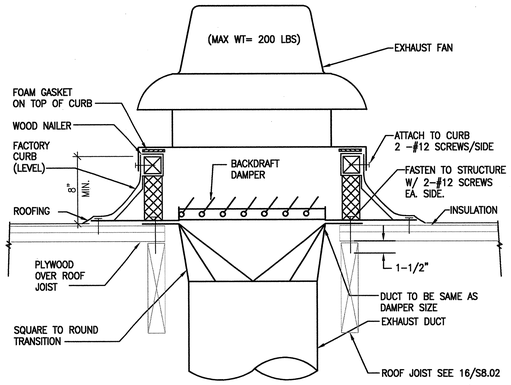

NOTE: EXHAUST FAN SHALL BE MOUNTED ON A PRE-FABRICATED ROOF CURB. SEE ARCH. AND STRUCT. DWGS FOR ROOF PENETRATION, FLASHING & ROOFING DETAILS.

TYPICAL DRAIN VALVE CONNECTION (7)

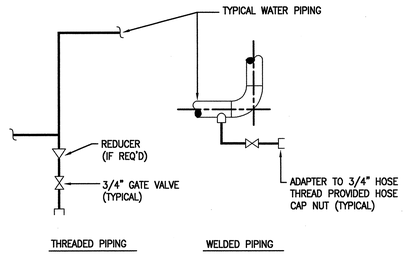

NOTES:
1. DRAIN ALL LOW POINTS AS INDICATED ABOVE.
2. WHERE SCALE POCKETS ARE SHOWN ON PIPE RISERS DIAGRAMS AND/OR PLANS. LOCATE DRAIN AT BOTTOM OF SCALE POCKETS.

EQUIPMENT RESTRAINED BY RESILIENT PADS (BOILER) (4)

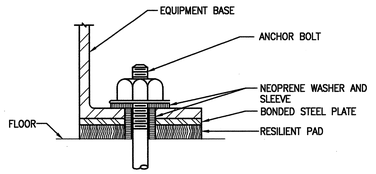

NOTE:
SEE DETAIL 4/M6.05 FOR ADDITIONAL INFORMATION.

DUCT THRU ROOF (1)

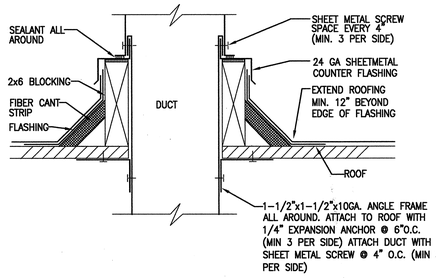

NOTE:
THIS DETAIL IS FOR REFERENCE ONLY. SEE ARCH DETAIL 1/A8.51.

PUMP MOUNTING DETAIL (11)

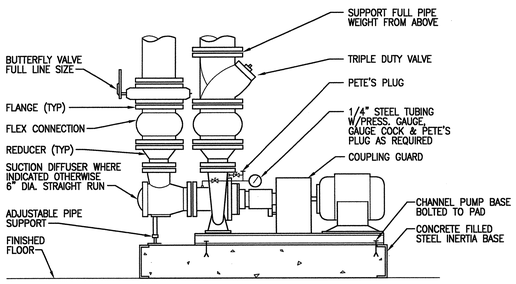

TYPICAL AIR VENT DETAIL (8)

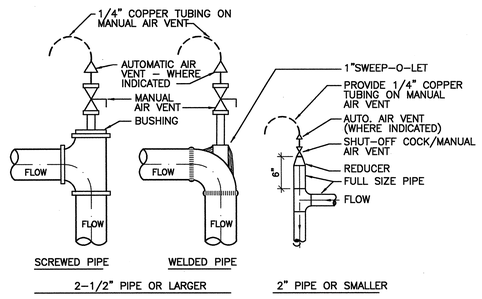

NOTES:
1. PROVIDE MANUAL AIR VENTS AT ALL PIPING HIGH POINTS & AT POINTS IN THE SYSTEM WHERE AIR CAN GET TRAPPED.
2. LOCATE AIR VENTS IN ELBOWS AS INDICATED ABOVE. WATER FLOW SHOULD ALWAYS BE HORRIZONTAL TOWARD THE ELBOW & THEN VERTICALLY DOWN.
3. PROVIDE A 1/4" MINIMUM TUBE ON THE DISCHARGE OF BOTH MANUAL & AUTOMATIC VENTS. TERMINATE TUBING WHERE ACCESSABLE FOR VENTING INTO A CAN OR AT NEAREST AIR GAP WASTE.
4. ALL AIR VENTS SHALL BE ACCESSABLE. PROVIDE ACCESS DOOR AS NECESSARY.
5. PROVIDE AUTOMATIC AIR VENTS WHERE VENTS WHERE INDICATED AND/OR SPECIFIED. PROVIDE AT LEAST TWO AIR VENTS IN EACH PIPING SYSTEM.

WEATHER PROTECTION AT FLEX CONNECTION (5)

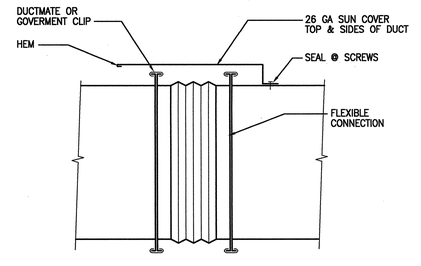

NOTE: TYPICAL @ ALL EXPOSED FLEXIBLE CONNECTIONS

PIPE ISOLATION AT FLOOR PENETRATION (2)

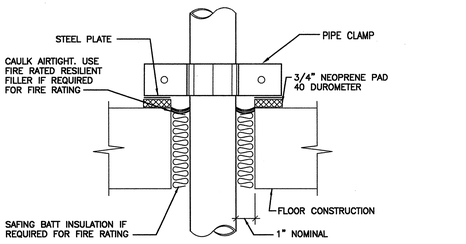

NOTE: IF PIPE IS SUSPENDED FROM OR DIRECTLY ATTACHED TO STRUCTURE OR OTHER BUILDING ELEMENTS, USE 1/2" THICK, 40-DUROMETER NEOPRENE AS SLEEVE BETWEEN PIPE AND PIPE COLLAR.

TYPICAL PIPE HANGERS DETAIL (9)

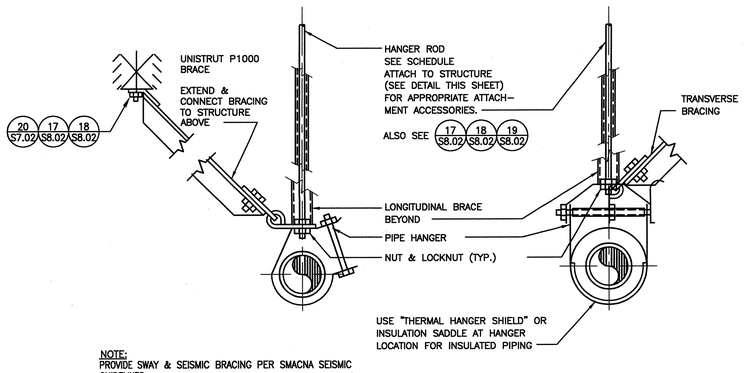

PIPE SIZE (IN)	MAX SUPPORT SPAN (FT)	MIN. ROD SIZE (IN)
UP TO 1"	7	3/8"
1-1/2"	9	3/8"
2 TO 2-1/2"	10	3/8"
3"	12	1/2"
3-1/2"	13	1/2"
4	14	5/8"
5	16	5/8"
6	17	3/4"

NOTE:
PROVIDE SWAY & SEISMIC BRACING PER SMACNA SEISMIC GUIDELINES.
SPACE BRACES AT EVERY OTHER ROD SUPPORT.

VERTICAL PIPE SUPPORT AT BOTTOM OF RISER (6)

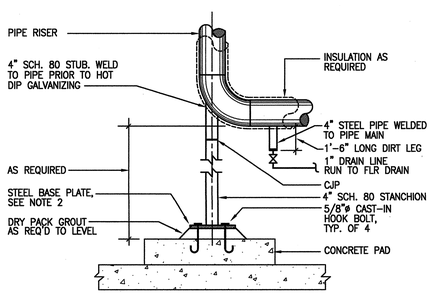

NOTES:
1. HOT DIP GALVANIZE STANCHION & BASE PLATE AFTER FABRICATION.
2. BASE PLATE TO BE 14"X14"X3/4"

CHEMICAL POT FEEDER MOUNTING DETAIL (3)

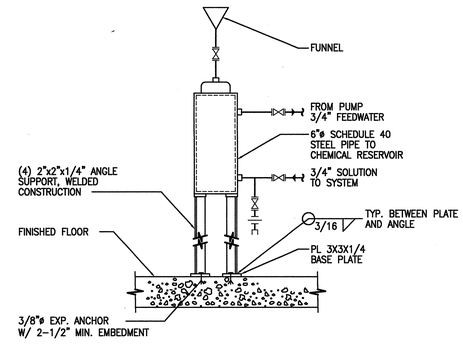

APPROVAL STAMP
IDENTIFICATION STAMP
DIVISION OF THE STATE ARCHITECT
APP. NO. 107417
FLS SS
DATE: 12/21/05

NO.	ISSUED FOR	DATE
1	DSA APPROVAL SET	12/08/05

REGISTERED PROFESSIONAL ENGINEER DOUGLAS L. ABELAND No. M29691 Exp. 06-30-06 dlabeland.com STATE OF CALIFORNIA
Date Signed 12/06/05
CERTIFIED BY

K M D
KAPLAN McLAUGHLIN DIAZ
ARCHITECTURE PLANNING
222 VALLEJO SAN FRANCISCO, CA 94111
(415) 398-5191 FAX (415) 394-7158

ALFATECH
120 MONTGOMERY STREET, SUITE 715 415-403-3000
SAN FRANCISCO, CALIFORNIA 94104 FAX: 415-788-8040
SAN JOSE • NEW JERSEY • SINGAPORE • AUSTRALIA
AT Project No. 20431

SOLANO COMMUNITY COLLEGE

SCCD
VALLEJO CENTER
Contract # A003.6123.01.V1

PROJECT NO. 419-201
DATE 12-08-05

MECHANICAL DETAILS
AS BUILTS

M6.04

PLOT DATE:

COPYRIGHT © 2004 BY KMD (KAPLAN McLAUGHLIN DIAZ). ALL RIGHTS RESERVED.

-

(10)

BOILER MOUNTING DETAIL

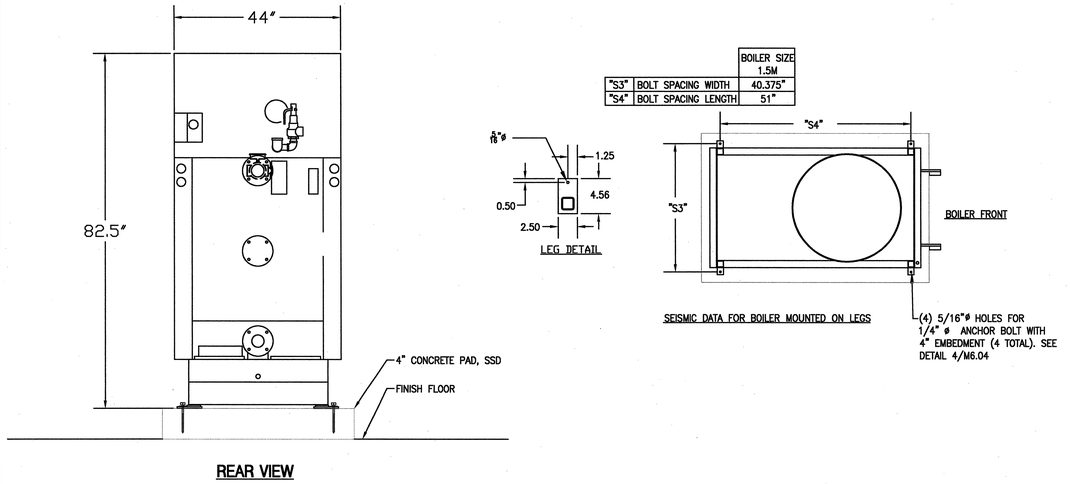

(4)

FLUID COOLER VIBRATION ISOLATOR (CT-1)

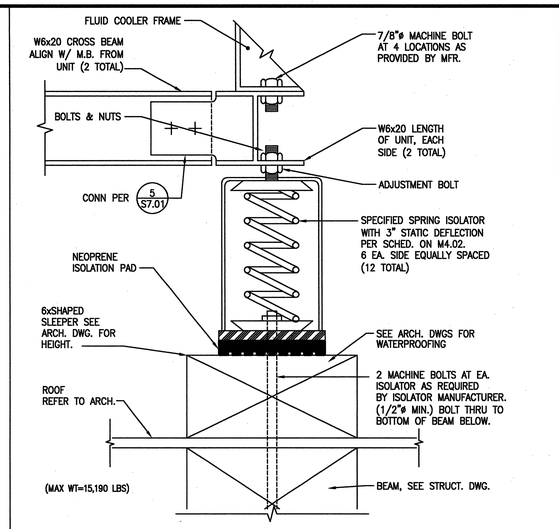

(1)

-

(11)

-

(8)

COMPUTER ROOM AC UNIT HANGING DETAIL

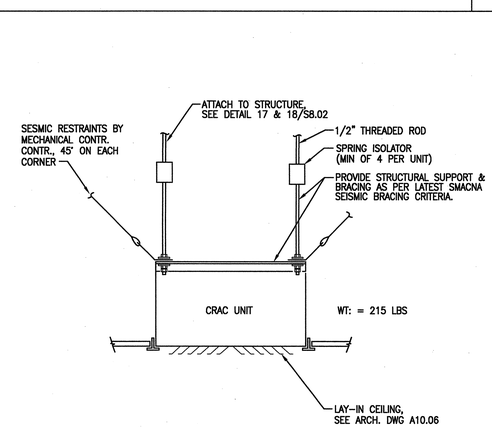

NOTE:
1. PROVIDE SEISMIC BRACING AT ALL FAN COILS. SEE SPECIFICATIONS.FOR SEISMIC DESIGN CRITERIA.

(5)

DUCT SUPPORT ON ROOF

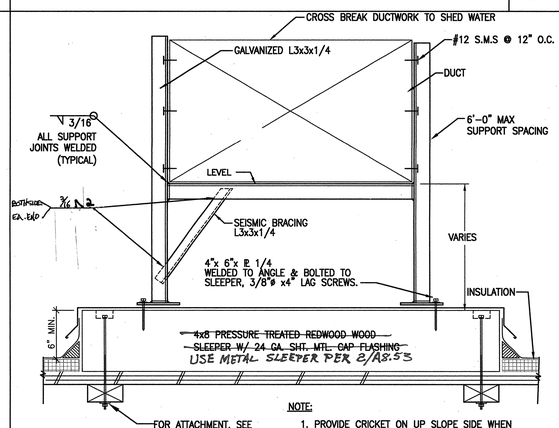

NOTE:
1. PROVIDE CRICKET ON UP SLOPE SIDE WHEN SLEEPERS ARE PERPENDICULAR TO ROOF SLOPE.
2. PROVIDE NEOPRENE–STEEL WASHERS UNDER BOLT HEADS & NEOPRENE PADS UNDER BASE PLATE TO PREVENT WATER LEAKAGE UNDER CAP FLASHING.

(2)

-

(12)

-

(9)

Darrel Jay Tucker

From: Darrel Jay Tucker [dtucker@ralphlarsen.net]
Sent: Wednesday, November 07, 2007 9:24 AM
To: Jay Chokahi (E-mail); Stephen Wong (E-mail); Melanie Kung (E-mail); Philip Ruiz (E-mail); Philip Ruiz (E-mail); Donald A. Dumford (E-mail)
Cc: Mark Rohning (E-mail); Darrel J Tucker (E-mail); Richard Castro (E-mail); Ron Richards (E-mail); Kevin Scott (E-mail); Lester Young (E-mail)
Subject: FW: Vallejo Center alternate seismic attachment for 3/M6.05

TO: KMD ARCHITECTURE
The mechanical detail 3/M6.05 shows a seismic tie down strap along the sides of the ROOFTOP HEAT PUMP CURBS. If we fasten the sheet metal straps along the sides of the roof top heat pump the attachment screws into the units the side access panels. Aire Sheet Metal asked for an alternate attachment so that the access panels would not be screwed shut. The attached file contains the alternate detail by SAUSSE so that the sheet metal straps will not be needed. Please advise if the alternate detail is not acceptable for any reason.
Darrel Jay Tucker

-----Original Message-----
From: Mark [mailto:Mark@airesm.com]
Sent: Wednesday, November 07, 2007 8:32 AM
To: dtucker@ralphlarsen.net
Subject: Vallejo Center SKHST_6000711070815O.pdf - Adobe Reader

Please find attached Alt Anchorage

From: "Chris Matthews" <cmatthews@mesausse.com>
To: "Mark" <mark@airesm.com>
Sent: Friday, February 16, 2007 11:27 AM
Attach: ALT ANCHORAGE Model (1).pdf
Subject: Vallejo Center -

Hey Mark,

Here is your alternate attachment detail.

Thanks,
Chris

Should you have any questions please do not hesitate to contact me.

Thank You,
Chris Matthews
Associations Engineer
M.W. Sausse & Co., Inc.
20 Gelli Dr.
Suite C
Novato, Ca. 94949
p 415-883-3377
f 415-883-4639

ALTERNATE UNIT ATTACHMENT METHOD for 3/M6.05

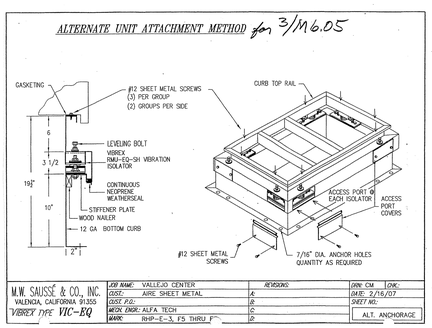

(6)

ROOFTOP HEAT PUMP MOUNTING DETAIL

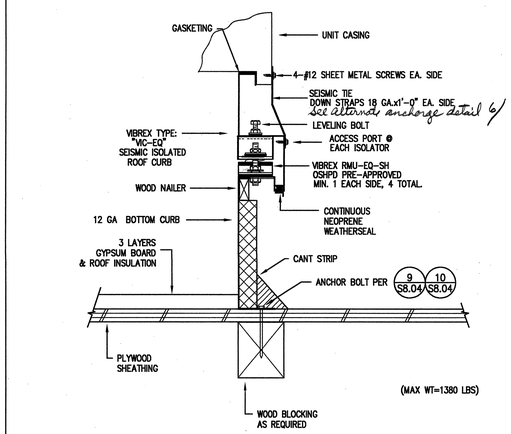

NOTES: 1. VIBRATION ISOLATOR/SEISMIC RESTRAINTS ARE OSHPD PRE-APPROVED, # OPA-0098.

(3)

APPROVAL STAMP
IDENTIFICATION STAMP
DIVISION OF THE STATE ARCHITECT
APP'D 107417
AC FLS TH SS ML
DATE: 12/21/05

NO.	ISSUED FOR	DATE
1	DSA APPROVAL SET	12/08/05

REGISTERED PROFESSIONAL ENGINEER — GEORGE S. ABELLERA — No. M29691 — Exp. 06-30-07 — Mechanical — STATE OF CALIFORNIA

Date Signed 12/06/05
IDENTIFIED BY

K M D
KAPLAN McLAUGHLIN DIAZ
ARCHITECTURE PLANNING
222 VALLEJO SAN FRANCISCO, CA 94111
(415) 398-5191 FAX (415) 394-7158

ALFATECH
120 MONTGOMERY STREET, SUITE 715 415-403-3000
SAN FRANCISCO, CALIFORNIA 94104 FAX: 415-788-2040
SAN JOSE • NEW JERSEY • SINGAPORE • AUSTRALIA
AT Project No. 2K201

SOLANO COMMUNITY COLLEGE

SCCD
VALLEJO CENTER
Contract # A003.6123.01.V1

PROJECT NO.	DATE
419-201	12-08-05

MECHANICAL DETAILS
AS BUILTS

M6.05

PLOT DATE:
COPYRIGHT © 2004 BY KMD (KAPLAN McLAUGHLIN DIAZ). ALL RIGHTS RESERVED.

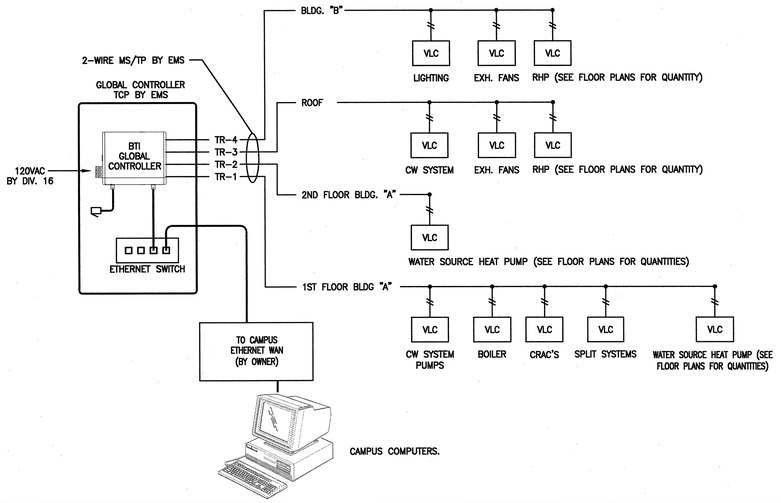

SYSTEM ARCHITECTURE (4)

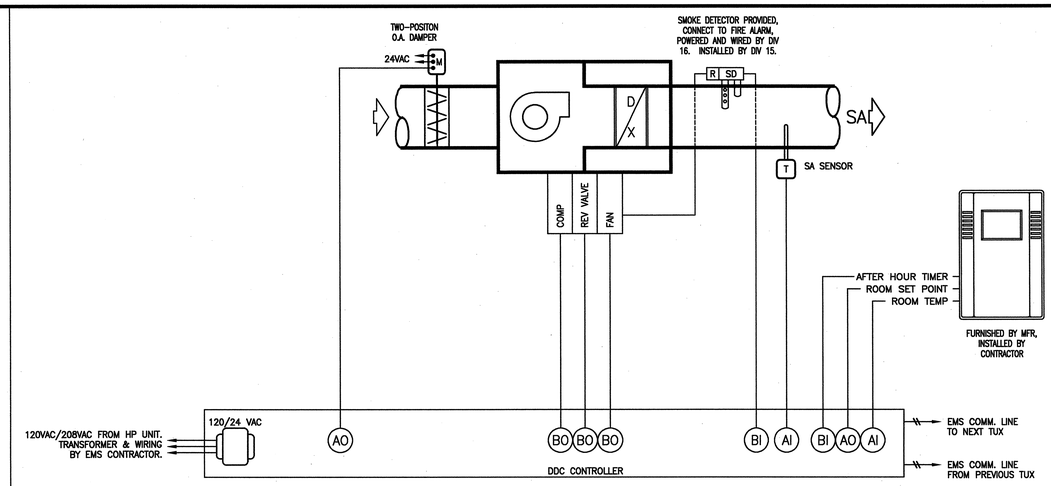

NOTE: SMOKE DETECTOR ONLY FOR UNITS 2,000 CFM AND LARGER

PACKAGE WATER SOURCE HEAT PUMP UNIT W/ SMOKE DETECTOR (1)

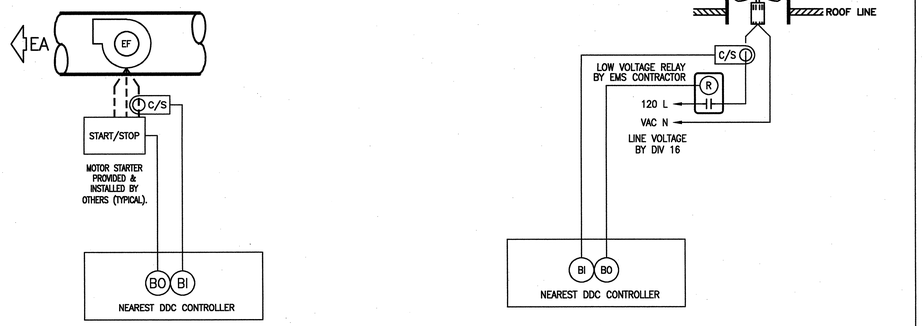

THREE PHASE EF

NO SCALE

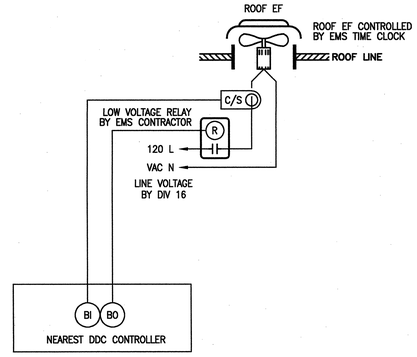

SINGLE PHASE EF

NO SCALE

EXHAUST FAN CONTROLS (5)

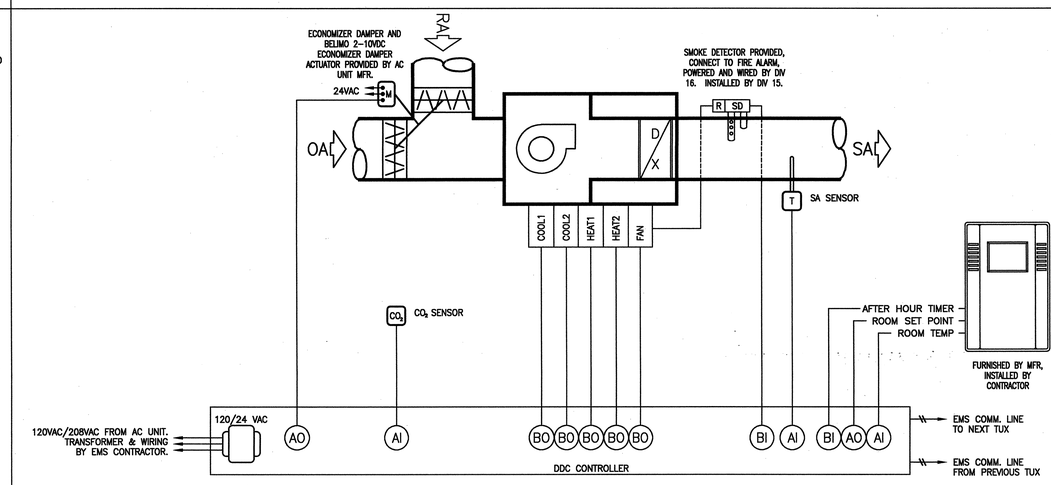

PACKAGE ROOFTOP AC UNIT W/ SMOKE DETECTOR (2)

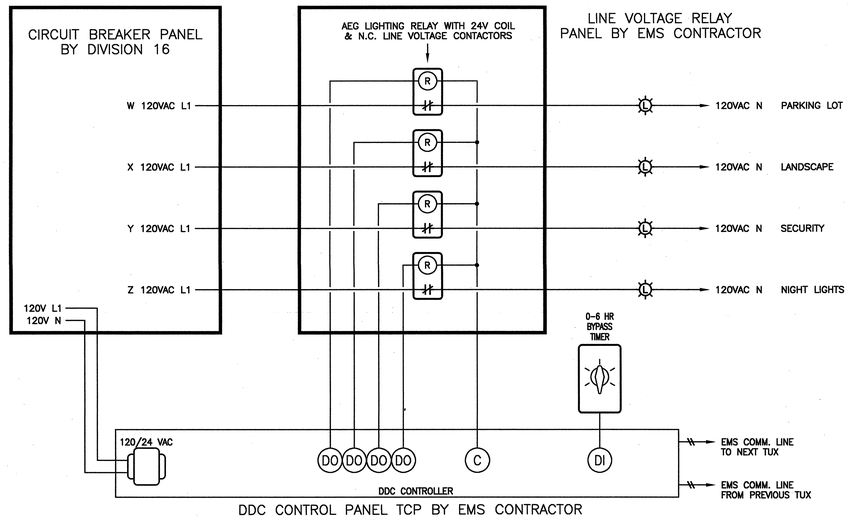

DDC CONTROL PANEL TCP BY EMS CONTRACTOR

LIGHTING CONTROL (3)

APPROVAL STAMP
IDENTIFICATION STAMP
DIVISION OF THE STATE ARCHITECT
APPL NO. 107417
AC FLS SS
DATE: 12/2/05

NO.	ISSUED FOR	DATE
1	DSA APPROVAL SET	12/08/05

GREGORY T. ABELLANO — No. M29691 — Exp. 06-30-06 — Mechanical — STATE OF CALIFORNIA

Date Signed 12/06/05
CERTIFIED BY

K M D
KAPLAN McLAUGHLIN DIAZ
ARCHITECTURE PLANNING
222 VALLEJO SAN FRANCISCO, CA 94111
(415) 398-5191 FAX (415) 394-7158

ALFATECH
120 MONTGOMERY STREET, SUITE 716 415-403-3000
SAN FRANCISCO, CALIFORNIA 94104 FAX 415-795-2040
SAN JOSE • NEW JERSEY • SINGAPORE • AUSTRALIA
AT Project No. 20431

SOLANO COMMUNITY COLLEGE

SCCD
VALLEJO CENTER
Contract # A003.6123.01.V1

PROJECT NO.	DATE
419-201	12-08-05

MECHANICAL
CONTROL DIAGRAMS
AS BUILTS

M7.01

PLOT DATE:

COPYRIGHT © 2004 BY KMD (KAPLAN McLAUGHLIN DIAZ). ALL RIGHTS RESERVED.

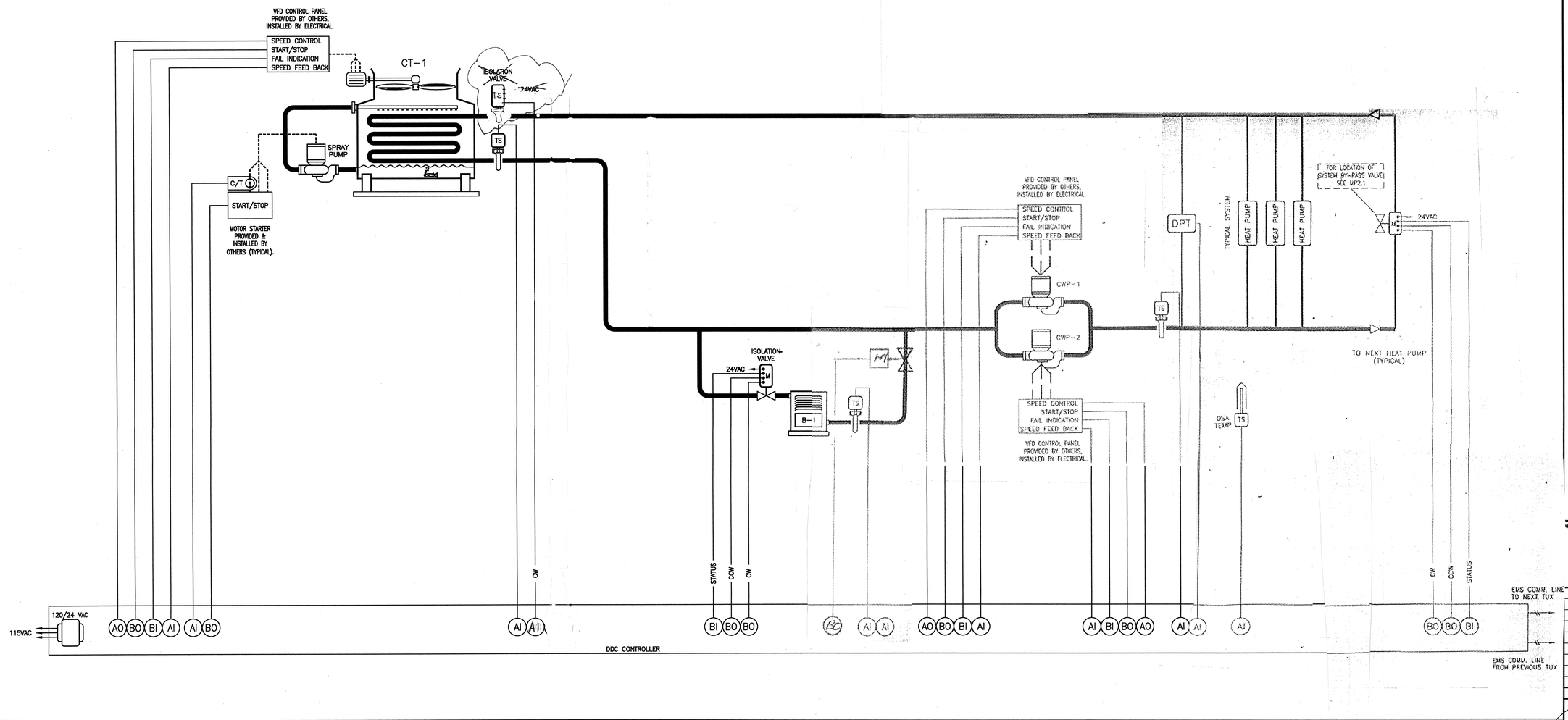

CONDENSER WATER LOOP CONTROL DIAGRAM

1

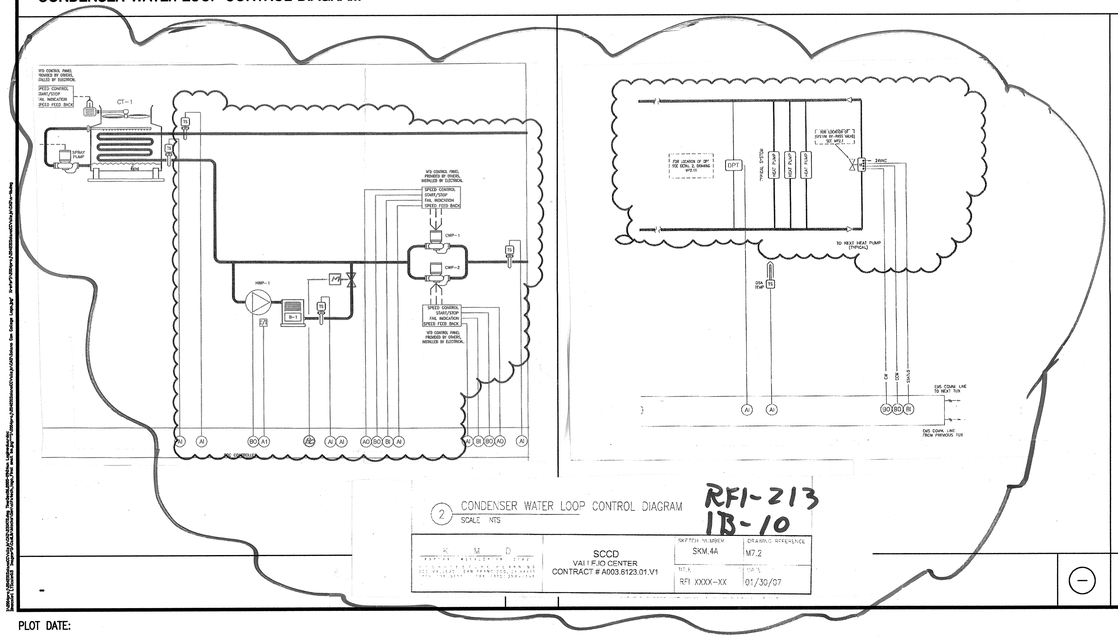

2 CONDENSER WATER LOOP CONTROL DIAGRAM
SCALE NTS

RFI-213
IB-10

K M D	SCCD VALLEJO CENTER CONTRACT # A003.6123.01.V1	SKM.4A	M7.2
		RFI XXXX-XX	01/30/07

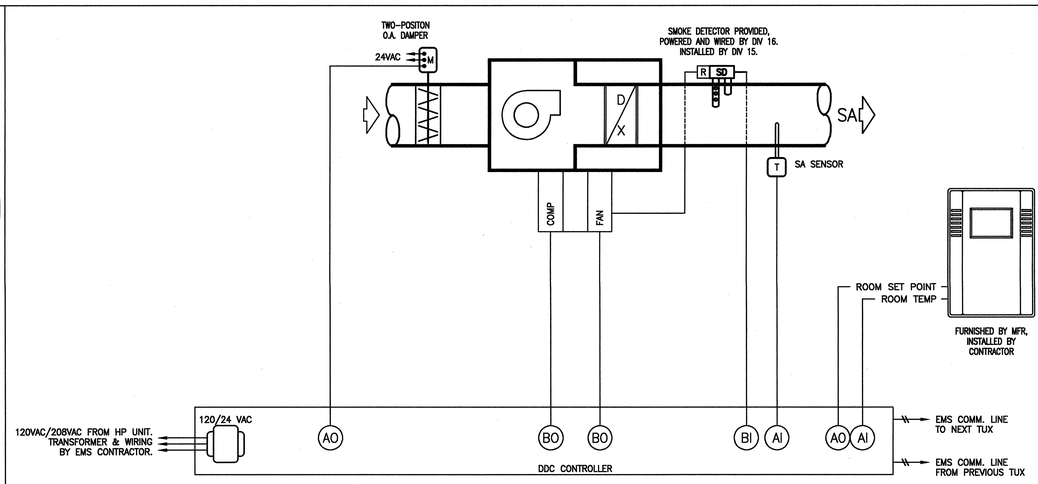

NOTE: SMOKE DETECTOR ONLY FOR UNITS 2,000 CFM AND LARGER

CRAC UNITS AND SPLIT SYSTEMS

2

APPROVAL STAMP
IDENTIFICATION STAMP
DIVISION OF THE STATE ARCHITECT
APPL 02- 107417
ACT FLS TH SS NL
DATE: 12/21/05

NO.	ISSUED FOR	DATE
1	DSA APPROVAL SET	12/08/05

REGISTERED PROFESSIONAL ENGINEER
GEORGE L. ARELLANO
No. M29691
Exp. 06-30-06
Mechanical
STATE OF CALIFORNIA

Date Signed 12/06/05
CERTIFIED BY

K M D
KAPLAN McLAUGHLIN DIAZ
ARCHITECTURE PLANNING
222 VALLEJO SAN FRANCISCO, CA 94111
(415) 398-5191 FAX (415) 394-7158

ALFATECH
120 MONTGOMERY STREET, SUITE 715 415-403-3000
SAN FRANCISCO, CALIFORNIA 94104 FAX: 415-788-6040
SAN JOSE • NEW JERSEY • SINGAPORE • AUSTRALIA
AT Project No. 25421

SOLANO COMMUNITY COLLEGE

SCCD
VALLEJO CENTER
Contract # A003.6123.01.V1

PROJECT NO.	DATE
419-201	12-08-05

MECHANICAL CONTROL DIAGRAMS
AS BUILTS

M7.02

PLOT DATE:

COPYRIGHT © 2004 BY KMD (KAPLAN McLAUGHLIN DIAZ). ALL RIGHTS RESERVED.

NOTES:

1. CONTRACTOR SHALL COORDINATE MECHANICAL SHOP DRAWINGS WITH ALL TRADES SO AS TO NOT ROUTE ANY CONDUIT, WIRING PIPING DUCTWORK, OR OTHER BUILDING SYSTEM UNDER HEAT PUMPS OR HEAT PUMP ACCESS LOCATIONS.

KEY NOTES:

1. BY-PASS MOTORIZED VALVE.
2. PROVIDE CONDENSATE PUMP, SEE HEAT PUMP SCHEDULE FOR MANUFACTURER AND MODEL NUMBER. COORDINATE INSTALLATION WITH PLUMBING AND ELECTRICAL TRADES. 18-14

SEE SHEET MP2.12 FOR CONTINUATION

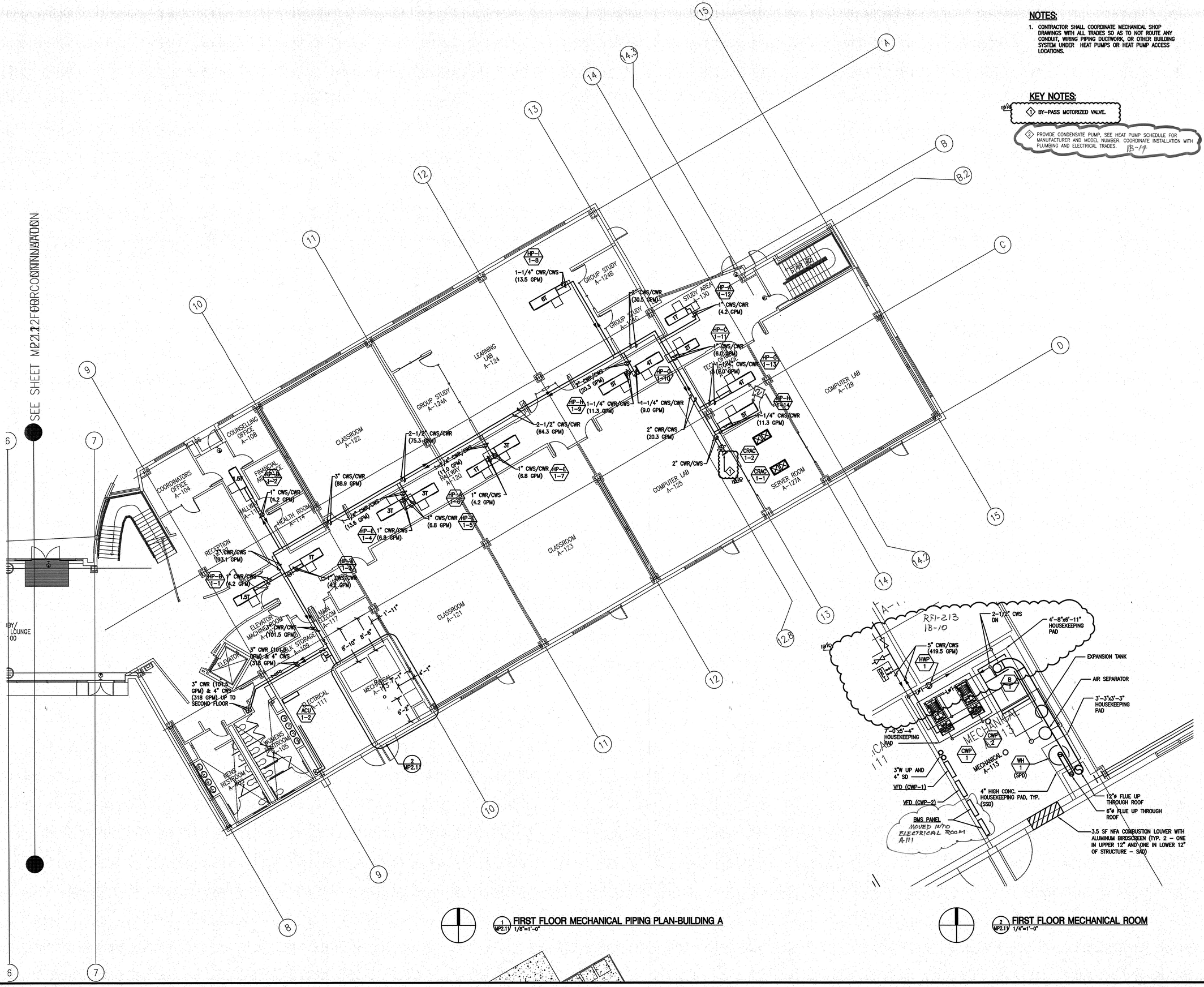

1 MP2.11 **FIRST FLOOR MECHANICAL PIPING PLAN-BUILDING A** 1/8"=1'-0"

2 MP2.11 **FIRST FLOOR MECHANICAL ROOM** 1/4"=1'-0"

APPROVAL STAMP
IDENTIFICATION STAMP 18-10
DIVISION OF THE STATE ARCHITECT
APPL 02- 107417
AC — FLS — SS 4993
DATE: 4/23/07

NO.	ISSUED FOR	DATE
2	INFORMATION BULLETIN #10	04/22/07
1	DSA APPROVAL SET	12/08/05

REGISTERED PROFESSIONAL ENGINEER
BRIAN D. CLASON
M20617
Exp. 6/30/07
MECHANICAL
STATE OF CALIFORNIA
CERTIFIED BY

K M D
KAPLAN McLAUGHLIN DIAZ
ARCHITECTURE PLANNING
222 VALLEJO SAN FRANCISCO, CA 94111
(415) 398-5191 FAX (415) 394-7158

alfatech_logo_Final small bw.jpg

120 MONTGOMERY STREET, SUITE 715 415-403-3000
SAN FRANCISCO, CALIFORNIA 94104 FAX: 415-788-3040
SAN JOSE • NEW JERSEY • SINGAPORE • AUSTRALIA
AlfaTech No. 20031

SCCD
VALLEJO CENTER
Contract # A003.6123.01.V1

PROJECT NO.	DATE
419-201	12-08-05

FIRST FLOOR
MECH. PIPING PLAN
BUILDING A
AS BUILTS

MP2.11

PLOT DATE:

COPYRIGHT © 2004 BY KMD (KAPLAN McLAUGHLIN DIAZ). ALL RIGHTS RESERVED.

Copy sent by e-mail to: Dowdle & Sons on 11/29/06

Ralph Larsen & Son, Inc.
General Contractors License No. 185341
300 8th Avenue
San Mateo, CA 94401-4221
Phone: (650) 579-0339
Fax: (650) 579-9349

Request for Information 166

Detailed, RFIs Grouped by RFI Number

Vallejo Center for Solano Community College Dist
Northgate Business Park
545 Columbus Parkway
Vallejo, CA 94591

Project # 2604
Tel: (707) 648-8327 Fax: (707) 553-9728

Ralph Larsen & Son, Inc.

RFI #: 166

Date Created: 10/23/2006

Answer Company	Answered By	Author Company	Authored By
		Ralph Larsen & Son, Inc. 300 8th Avenue San Mateo, CA 94401	Jay Tucker

Co-Respondent

Author RFI Number

Subject: Confirm CWS & CWR pipe size to roof top units.

Discipline

Category

Cc: Company Name | Contact Name | Copies | Notes

Question

Date Required: 11/4/2006

Review attached RFI-2 from Dowdle & Sons Mechanical. The space available (through the premanufactures curbs) for pipes and conduit to the roof top CLIMATE MASTER UNITS is minimal. Dowdle & Sons Mechanical is proposing to use the piping size for the risers that will match the pipe size connections provided by CLIMATE MASTER at the roof top units. We believe the space problem (at each of the roof top isolation curbs) exist at all of the Roof top units.
1. May Dowdle & Sons Mechanical reduce the CWS and CWR piping to the pipe size provided on the CLIMATE MASTER units at each of the risers to each of the rooftop units?

Suggestion

Answer

Date Answered:

Yes.

Angelo Dominguez - ATCG, Inc. 11/28/06

Copy sent by e-mail to: Dowdle & Sons; Long Electric, Associated Constructors on 11/6/06

Ralph Larsen & Son, Inc.
General Contractors License No. 185341
300 8th Avenue
San Mateo, CA 94401-4221
Phone: (650) 579-0339
Fax: (650) 579-9349

Request for Information 174

Detailed, RFIs Grouped by RFI Number

Copy sent by email to: East Bay on 2/3/07

Vallejo Center for Solano Community College Dist
Northgate Business Park
545 Columbus Parkway
Vallejo, CA 94591

Project # 2604
Tel: (707) 648-8327 Fax: (707) 553-9728

Ralph Larsen & Son, Inc.

RFI #: 174

Date Created: 11/2/2006

Answer Company	Answered By	Author Company	Authored By
		Ralph Larsen & Son, Inc. 300 8th Avenue San Mateo, CA 94401	Jay Tucker

Co-Respondent

Author RFI Number

Subject: Need hanger detail for pipe support at LOBBY ROOF

Discipline

Category

Cc: Company Name | Contact Name | Copies | Notes

Question

Date Required: 11/9/2006

The Contract Drawings show several pipe systems that must be supported from the roof structure between GRID LINES 5 TO 7 and between GRIDS N to P. Detail S/M6.04 is the only detail we have found that provides information on support of pipes from the structure. We have not found any details for support from the roof structure that apply to the structure in this area. Note 2 on the roof structure has metal decking (type D) with no concrete fill) over the steel beams. Detail S/M6.04 refers us to detail 20/S7.02 for connection to metal decking. We are unable to utilize attachment detail 20/S7.02 for support of pipes in this area.
1. Have we overlooked a detail within the Contract Documents that could be used in this area?
Review the attached details showing the supports that we have already installed for the pipe supports in this areas. The attached details are consistent with the requirements of the structure to be reviewed by the Architect and Structural Engineer. See NOTE 2 of detail S/M6.01. Our understanding is that this note is being applied to all supports (not just duct supports, and between GRID N to P?
2. Is the support method shown in the attached sketches acceptable for support of all piping between GRID LINES 5 to 7

Suggestion

Answer

- DASSE TAKES EXCEPTION TO THE SUPPORT OF M/E/P PIPES AS SHOWN ON THIS RFI.
- CCC TO COORDINATE BRACING PER SMACNA GUIDELINES.

Chih-Hung Cheng / DASSE

Date Answered:

Printing Manager | Printed on: 11/2/2006 | RALPH | Page 1

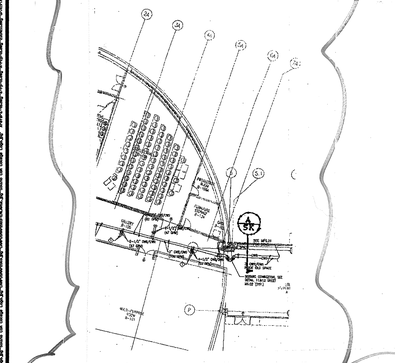

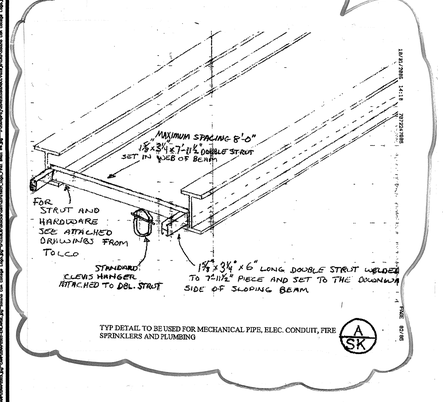

TYP DETAIL TO BE USED FOR MECHANICAL PIPE, ELEC. CONDUIT, FIRE SPRINKLERS AND PLUMBING

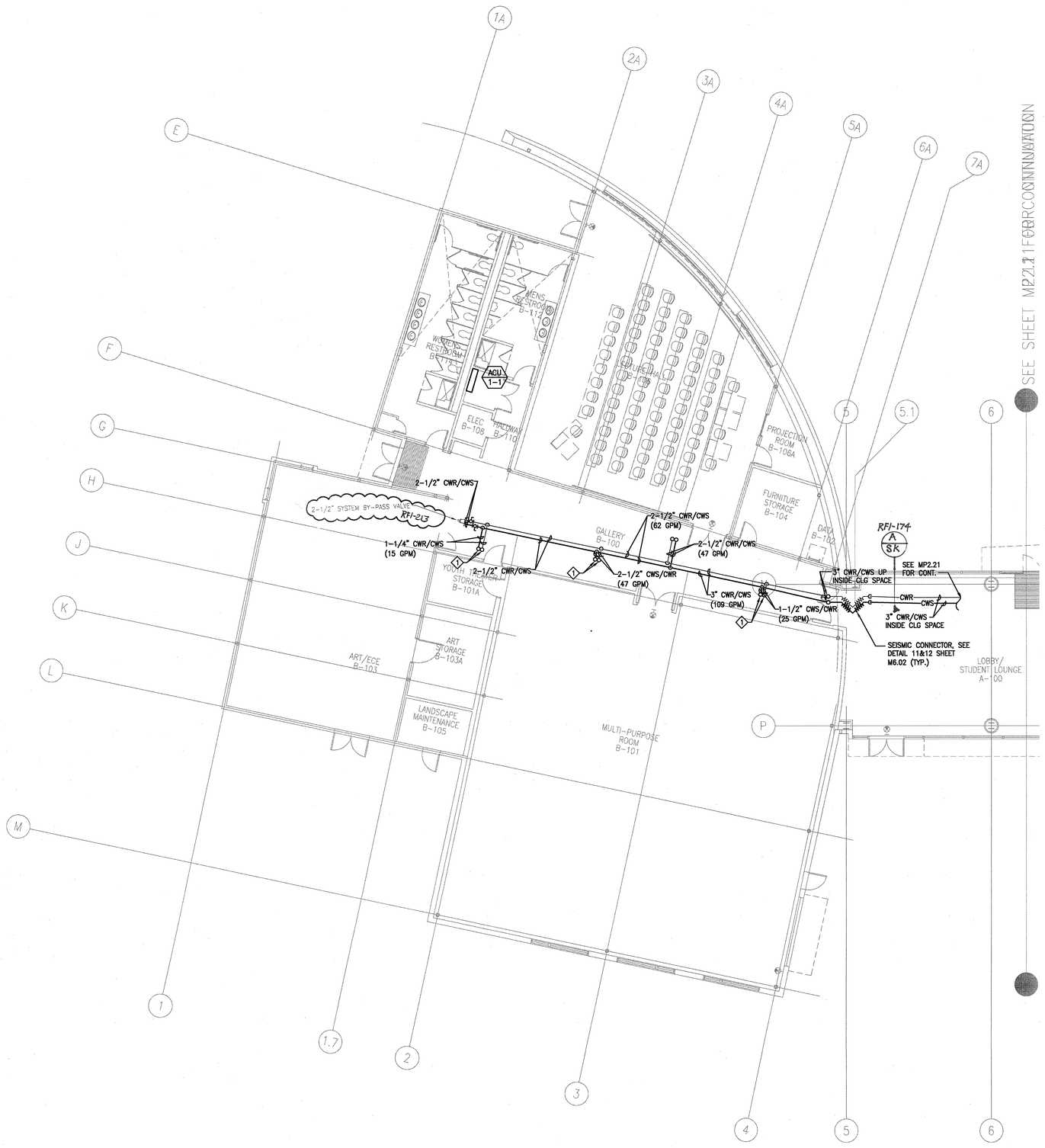

NOTES:

1. CONTRACTOR SHALL COORDINATE MECHANICAL SHOP DRAWINGS WITH ALL TRADES SO AS TO NOT ROUTE ANY CONDUIT, WIRING PIPING DUCTWORK, OR OTHER BUILDING SYSTEM UNDER HEAT PUMPS OR HEAT PUMP ACCESS LOCATIONS.

KEY NOTES:

1 SEE ARCH. DETAIL 6/A5.3 FOR PIPE PENETRATION THRU ROOF, TYP.

1 / MP2.12 **FIRST FLOOR MECHANICAL PIPING PLAN-BUILDING B**
1/8"=1'-0"

APPROVAL STAMP
IDENTIFICATION STAMP
DIVISION OF THE STATE ARCHITECT
APPL NO. 107417
AC FLS SS
DATE: 12/21/05

NO.	ISSUED FOR	DATE
1	DSA APPROVAL SET	12/06/05

Registered Professional Engineer — Christopher J. Arbuckle — No. M29691 Exp. 06-30-06 — Mechanical — State of California

Date Signed 12/06/05
CERTIFIED BY

K M D
KAPLAN McLAUGHLIN DIAZ
ARCHITECTURE PLANNING
222 VALLEJO SAN FRANCISCO, CA 94111
(415) 398-5191 FAX (415) 394-7158

ALFATECH
120 MONTGOMERY STREET, SUITE 715 415-403-3000
SAN FRANCISCO, CALIFORNIA 94104 FAX: 415-788-8040
SAN JOSE • NEW JERSEY • SINGAPORE • AUSTRALIA
AT Project No. 20431

SOLANO COMMUNITY COLLEGE

SCCD
VALLEJO CENTER
Contract # A003.6123.01.V1

PROJECT NO.	DATE
419-201	12-08-05

FIRST FLOOR
MECH. PIPING PLAN
BUILDING B
AS BUILTS

MP2.12

PLOT DATE:

COPYRIGHT © 2004 BY KMD (KAPLAN McLAUGHLIN DIAZ). ALL RIGHTS RESERVED.

Copy sent by e-mail to: Dowdle & Sons on 11/29/06

Ralph Larsen & Son, Inc.
General Contractors License No. 185341
300 9th Avenue
San Mateo, CA 94401-4221
Phone: (650) 579-0339
Fax: (650) 579-0343

Request for Information 166

Detailed, RFIs Grouped by RFI Number

Vallejo Center for Solano Community College Dist
Northgate Business Park
545 Columbus Parkway
Vallejo, CA 94591

Project # 2604
Tel: (707) 649-8327 Fax: (707) 553-9728

Ralph Larsen & Son, Inc.

RFI #: 166 **Date Created: 10/23/2006**

Answer Company **Answered By** **Author Company** **Authored By**
Ralph Larsen & Son, Inc. Jay Tucker
300 8th Avenue
San Mateo, CA 94401

Co-Respondent **Author RFI Number**

Subject **Discipline** **Category**
Confirm CWS & CWR pipe size to roof top units.

Cc: Company Name **Contact Name** **Copies** **Notes**

Question **Date Required: 11/4/2006**
Review attached RFI-2 from Dowdle & Sons Mechanical. The space available (through the premanufactures curbs) for pipes and conduit to the roof top CLIMATE MASTER UNITS is minimal. Dowdle & Sons Mechanical is proposing to use the piping size for the risers that will match the pipe size connections provided by CLIMATE MASTER at the roof top units. We believe the space problem (at each of the roof top isolation curbs) exist at all of the Roof top units.
1. May Dowdle & Sons Mechanical reduce the CWS and CWR piping to the pipe size provided on the CLIMATE MASTER units at each of the risers to each of the rooftop units?

Suggestion

Answer **Date Answered:**

Yes.

Angelo Dominguez - ATCG, Inc. 11/28/06

NOTES:

1. CONTRACTOR SHALL COORDINATE MECHANICAL SHOP DRAWINGS WITH ALL TRADES SO AS TO NOT ROUTE ANY CONDUIT, WIRING PIPING DUCTWORK, OR OTHER BUILDING SYSTEM UNDER HEAT PUMPS OR HEAT PUMP ACCESS LOCATIONS.

KEY NOTES:

1 CWR/CWS UP TO ROOF RHP, SEE ARCH DETAIL 6/A8.53.

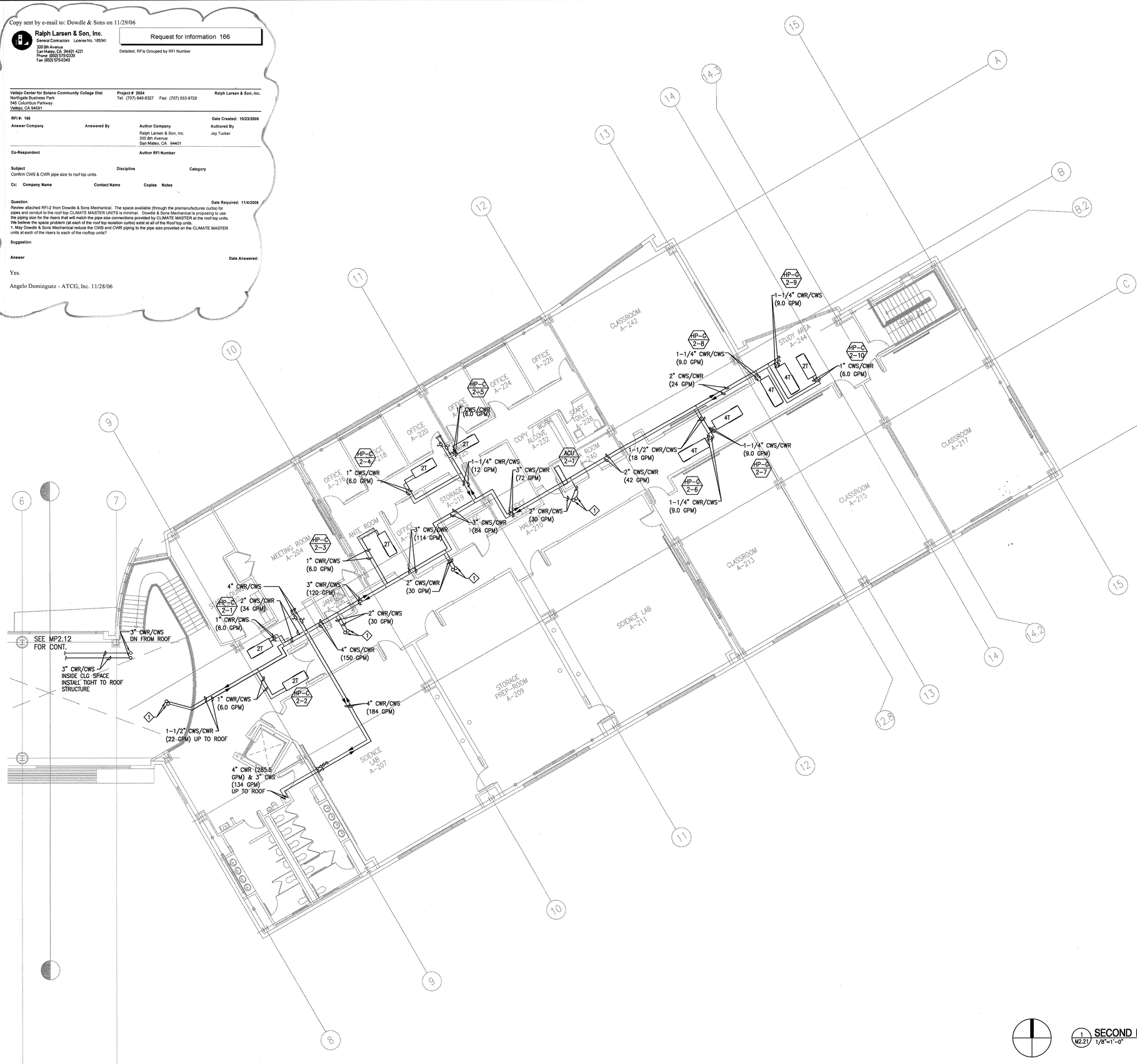

1 M2.21 SECOND FLOOR MECHANICAL PIPING PLAN-BUILDING A
1/8"=1'-0"

APPROVAL STAMP
IDENTIFICATION STAMP
DIVISION OF THE STATE ARCHITECT
APP. NO. 107417
AC FLS TH SS AL
DATE: 12/21/05

NO.	ISSUED FOR	DATE
1	DSA APPROVAL SET	12/08/05

REGISTERED PROFESSIONAL ENGINEER GEORGE L. ABELAND No. M29691 Exp. 06-30-06 MECHANICAL STATE OF CALIFORNIA
Date Signed 12/06/05
CERTIFIED BY

K M D
KAPLAN McLAUGHLIN DIAZ
ARCHITECTURE PLANNING
222 VALLEJO SAN FRANCISCO, CA 94111
(415) 398-5191 FAX (415) 394-7158

ALFATECH
120 MONTGOMERY STREET, SUITE 715 415-403-3000
SAN FRANCISCO, CALIFORNIA 94104 FAX: 415-788-8040
SAN JOSE • NEW JERSEY • SINGAPORE • AUSTRALIA
AT Project No. 204231

SOLANO COMMUNITY COLLEGE

SCCD
VALLEJO CENTER
Contract # A003.6123.01.V1

PROJECT NO.	DATE
419-201	12-08-05

SECOND FLOOR
MECH. PIPING PLAN
BUILDING A
AS BUILTS

MP2.21

PLOT DATE:

COPYRIGHT © 2004 BY KMD (KAPLAN McLAUGHLIN DIAZ). ALL RIGHTS RESERVED.

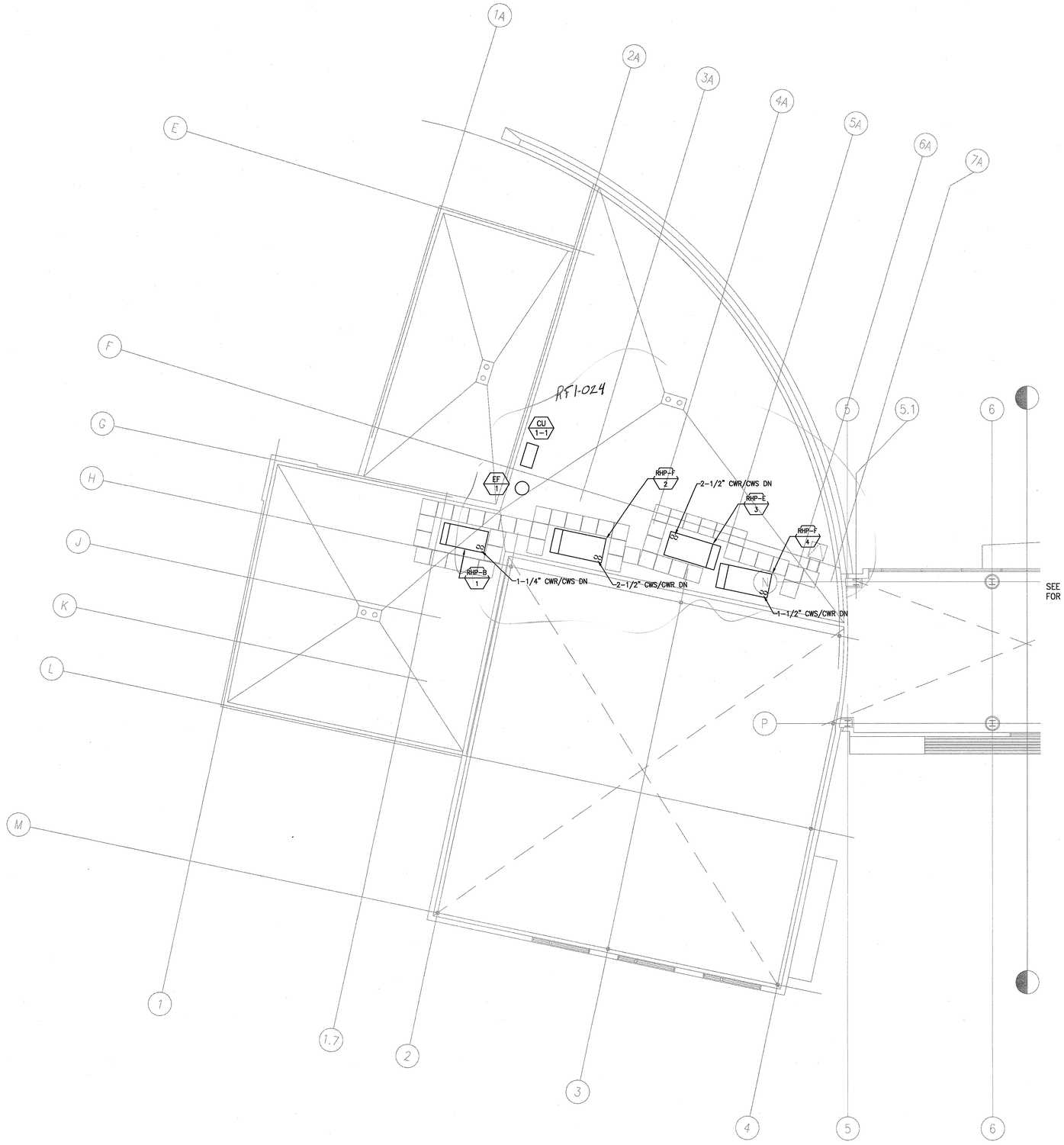

1 M2.22 **ROOF MECHANICAL PIPING PLAN-BUILDING B**
1/8"=1'-0"

APPROVAL STAMP
IDENTIFICATION STAMP
DIVISION OF THE STATE ARCHITECT
APP. 02- 107417
AC FLS SS
DATE: 12/21/05

NO.	ISSUED FOR	DATE
1	DSA APPROVAL SET	12/08/05

REGISTERED PROFESSIONAL ENGINEER
GEORGE L. ARELLANO
No. M29691
Exp. 08-30-06
CIVIL
STATE OF CALIFORNIA

Date Signed 12/06/05
CERTIFIED BY

K M D
KAPLAN McLAUGHLIN DIAZ
ARCHITECTURE PLANNING
222 VALLEJO SAN FRANCISCO, CA 94111
(415) 398-5191 FAX (415) 394-7158

ALFATECH
120 MONTGOMERY STREET, SUITE 715 415-403-3000
SAN FRANCISCO, CALIFORNIA 94104 FAX 415-788-8040
SAN JOSE • NEW JERSEY • SINGAPORE • AUSTRALIA
AT Project No. 254231

SOLANO COMMUNITY COLLEGE

SCCD
VALLEJO CENTER
Contract # A003.6123.01.V1

PROJECT NO.	DATE
419-201	12-08-05

ROOF MECHANICAL PIPING PLAN
BUILDING B
AS BUILTS

MP2.22

PLOT DATE:

COPYRIGHT © 2004 BY KMD (KAPLAN McLAUGHLIN DIAZ). ALL RIGHTS RESERVED.

SEISMIC BRACING NOTES

A. PROVIDE SEISMIC BRACING OF PLUMBING EQUIPMENT AND PIPING IN ACCORDANCE WITH THE REQUIREMENTS OF THE 2001 CALIFORNIA BUILDING CODE WITH 2001 CALIFORNIA AMENDMENTS FOR SEISMIC ZONE 4 AND IMPORTANCE FACTOR OFD 1.5.

B. PIPING SHALL BE SUPPORTED AND BRACED WITH ONE OF THE FOLLOWING SEISMIC RESTRAINT SYSTEMS:

1. THE SMACNA GUIDELINES OF THE SEISMIC RESTRAINT OF MECHANICAL SYSTEMS AND PLUMBING SYSTEMS.
2. NUSIG SEISMIC SUPPORT DEVICES.
3. THE SUPERSTRUT SEISMIC RESTRAINT SYSTEM.
4. THE B-LINE SEISMIC RESTRAINT SYSTEM.

C. FIRE PROTECTION PIPING

1. THE SPACING AND DETAILS OF THE SUPPORT AND BRACING OF FIRE SPRINKLER PIPING SHALL COMPLY WITH THE LATEST EDITION OF NFPA 13.
2. PROVIDE ANCHORAGE DETAILS AND CALCULATIONS OF THE CONNECTION OF SWAY BRACING TO THE STRUCTURE.
3. DESIGN LOADS FOR THE ANCHORAGE MAY BE COMPUTED PER TABLE 4-6.4.3.5.2 OF NFPA 13, 1994 EDITION.
4. WHERE APPLICABLE DETAILS FOR THE SUPPORT AND BRACING MAY BE PER ITEM B ABOVE.
5. ALL SHOP DRAWINGS OF THE SPRINKLER SYSTEM SHALL BE SUBMITTED TO THE LOCAL FIRE MARSHAL AND MECHANICAL ENGINEER OF RECORD FOR REVIEW AND APPROVAL PRIOR TO INSTALLATION.

D. CALCULATIONS AND DRAWINGS SHALL BE SUBMITTED FOR PIPING SUPPORTS AND BRACING SHOWING:

1. LOCATION OF SEISMIC BRACING.
2. REACTION FORCES TO THE SUPPORTING STRUCTURE.
3. MANUFACTURER'S DESIGNATION OF SUPPORT DEVICES.

E. SEISMIC BRACING POINTS SHALL BE SUBMITTED ON CONTRACTOR'S COORDINATED SHOP DRAWINGS.

F. CONTRACTOR TO SUBMIT WRITTEN CERTIFICATION, BY A STRUCTURAL OR CIVIL ENGINEER REGISTERED IN THE STATE OF CALIFORNIA THAT THE PIPING AND DUCTWORK IS INSTALLED IN COMPLIANCE WITH THE REQUIREMENTS OF THE 2001 UNIFORM BUILDING CODE.

TITLE 24 COMPLIANCE DOCUMENTATION

SERVICE WATER HEATING SYSTEMS

[✓] THE FOLLOWING SERVICE WATER HEATING SYSTEM AND EQUIPMENT MAY BE INSTALLED ONLY IF THE MANUFACTURER HAS CERTIFIED THAT THE EQUIPMENT MEETS OR EXCEEDS ALL APPLICABLE EFFICIENCY REQUIREMENTS LISTED IN SECTION 113 OF THE ENERGY EFFICIENCY STANDARDS: OIL-FIRED STORAGE TYPES > 105,000 BTU/HR; OIL-FIRED NON-STORAGE TYPES > 210,000 BTU/HR; GAS-FIRED NON-STORAGE TYPES > 200,000 BTU/HR.

[NA] UNFIRED SERVICE WATER HEATER STORAGE TANKS AND BACKUP TANKS FOR SOLAR WATER HEATING SYSTEMS SHALL HAVE EITHER: EXTERNAL INSULATION WITH AN INSTALLED R-VALUE OF AT LEAST R-12; INTERNAL AND EXTERNAL INSULATION WITH A COMBINED R-VALUE OF AT LEAST R-16; OR SUFFICIENT INSULATION SO THAT THE HEAT LOSS OF THE TANK SURFACE BASE ON AN 80°F WATER-AIR TEMPERATURE DIFFERENCE SHALL BE LESS THAN 6.5 BTU/SF

[✓] IF A CIRCULATING HOT WATER SYSTEM IS INSTALLED, IT SHALL HAVE A CONTROL CAPABLE OF AUTOMATICALLY TURNING OFF THE CIRCULATING PUMP(S) WHEN HOT WATER IS NOT REQUIRED.

LAVATORIES IN RESTROOMS OF PUBLIC FACILITIES SHALL BE EQUIPPED WITH:

[✓] OUTLET DEVICES THAT LIMIT THE FLOW OF HOT WATER TO A MAXIMUM OF 0.5 GALLONS PER MINUTE.

[NA] FOOT ACTUATED CONTROL VALVES, AND OUTLET DEVICES THAT LIMIT THE FLOW OF HOT WATER TO A MAXIMUM OF 0.75 GALLONS PER MINUTE.

[NA] PROXIMITY SENSOR ACTUATED CONTROL VALVES, AND OUTLET DEVICES THAT LIMIT THE FLOW OF HOT WATER TO A MAXIMUM OF 0.75 GALLONS PER MINUTE.

[NA] SELF-CLOSING VALVES, AND OUTLET DEVICES THAT LIMIT THE FLOW OF HOT WATER TO A MAXIMUM OF 2.5 GALLONS PER MINUTE, AND 0.25 GALLONS/CYCLE (CIRCULATING SYSTEM).

[NA] SELF-CLOSING VALVES, AND OUTLET DEVICES THAT LIMIT THE FLOW OF HOT WATER TO A MAXIMUM OF 2.5 GALLONS PER MINUTE, AND 0.50 GALLONS/CYCLE (NON-CIRCULATING SYSTEM).

[NA] SELF-CLOSING VALVES, AND OUTLET DEVICES THAT LIMIT THE FLOW OF HOT WATER TO A MAXIMUM OF 2.5 GALLONS PER MINUTE, AND 0.75 GALLONS/CYCLE (FOOT SWITCHES AND PROXIMITY SENSOR CONTROLS).

[✓] LAVATORIES IN RESTROOM OF PUBLIC FACILITIES SHALL BE EQUIPPED WITH CONTROLS TO LIMIT THE OUTLET TEMPERATURE OF 110°F.

FIRE PROTECTION NOTES

1. THE ENTIRE PROJECT AREA SHALL BE PROTECTED WITH AN APPROVED, WET HYDRAULIC CALCULATED AUTOMATIC SPRINKLER SYSTEM. ~~THE SERVER ROOM A127A SHALL HAVE A PRE-ACTION DRY PIPE, SPRINKLER SYSTEM AND AN FM-200, OR EQUAL CLEAN AGENT FIRE SUPRESSION SYSTEM. COORDINATE WITH FLOOR/CEILING CONSTRUCTION TRADES TO PROVIDE ACCESS TO ALL VALVES AND OTHER EQUIPMENT.~~ *See RFI-246 and letter from Solano College dated 1-*
INSTALL SPRINKLERS IN ALL CEILING SPACE.
2. PIPE AND FITTINGS SHALL BE IN ACCORDANCE WITH NFPA #13. THE CORRISION RESISTANCE RATION (CRR) OF PIPING SHALL NOT BE LESS THAN 1.0.
3. FINAL SPRINKLER SYSTEM TEST SHALL BE MADE IN ACCORDANCE WITH NFPA #13 AND CAC TITLE 19.
4. PROVIDE SHOP DRAWING TO THE ARCH/ENGINEER FOR REVIEW AND TO DSA FIRE MARSHAL FOR APPROVAL PRIOR TO INSTALLATION.
5. FIRE PROTECTION CONTRACTOR TO PROVIDE 1/4"=1'-0" SCALE AS-BUILT DRAWINGS TO OWNER.
6. SPRINKLER HEADS SHALL BE QUICK-REPONSE TYPE. SPRINKLER HEAD FINISH SHALL BE AS FOLLOWS:
   A. SPRINKLER HEADS IN PUBLIC AREAS SUCH AS LOBBIES, HALLWAYS, AND CORRIDOR SHALL BE CONCEALED TYPE. ALL OTHER AREAS SHALL BE SEMI-RECESSED TYPE.
   B. SPRINKLER HEADS FOR LINEAR WOOD CEILING CONSTRUCTION SHALL BE CHROME-PLATED (WITH BLACK ESCUTCHEON). ALL OTHER AREAS SHALL HAVE WHITE FINISH AND WITH WHITE ESCUTCHEON.
7. WET SPRINKLER SYSTEM SHALL BE BE IN ACCORDANCE TO LATEST EDITION OF NFPA 13 LIGHT HAZARD, .09 GPM/SF @2000 SF.
8. PROVIDE SEISMIC JOINT PIPE CONNECTOR AT SEISMIC JOINT AS REQUIRED AND PER BY NFPA 13 AND CA FIRE MARSHALL.

SOLANO
COMMUNITY COLLEGE
http://www.solano.cc.ca.us

January 30, 2007

TO: Darrel Tucker
Ralph Larsen & Son, Inc.
300 8th Avenue
San Mateo, CA. 94401-0349

RE: Vallejo Center, Project #06-002
Rejection of Pre-action Fire Protection System

You are herein notified that the owner does not want a pre-action fire protection system at the Vallejo Center. Please consider this confirmation of the response to RFI-246 and disregard the portion of P0.01 Fire Protection Note 1 which reads "The server room A127A shall have a pre-action dry pipe, sprinkler system and an FM 200, or equal clean agent fire suppression system." Please call if you have any questions or concerns.

[signature]
Frank Kitchen
Director of Facilities

cc: Scott Colt, Kitchell CEM
d'Arcy Howard, KMD Architects
Philip Ruiz, Independent Inspection Services
File

4000 Suisun Valley Road   Fairfield, California 94534   (707) 864-7196   Maintenance and Operations Department

PLUMBING LEGEND

SYMBOL	ABBREV	DESCRIPTION
—A—	A	COMPRESSED AIR (LAB)
—AV—	AV	ACID VENT (LAB VENT)
—AW—	AW	ACID WASTE (LAB WASTE)
—CO2—	CO2	CARBON DIOXIDE
—CD—	CD	CONDENSATE DRAIN
—CSP—	CSP	COMBINATION STANDPIPE
	DCW	DOMESTIC COLD WATER (POTABLE WATER)
	DHW	DOMESTIC HOT WATER
—DI—	DI	DEIONIZED WATER PIPING
—DIR—	DIR	DEIONIZED WATER RETURN PIPING
—F—	F	FIRE WATER SERVICE
—FDC—	FDC	FIRE DEPARTMENT CONNECTION AND PIPING
—FOR—	FOR	FUEL OIL RETURN
—FOS—	FOS	FUEL OIL SUPPLY
—FOV—	FOV	FUEL OIL VENT
—G—	G	NATURAL GAS
	HWR	DOMESTIC HOT WATER RECIRCULATION
—ICW—	ICW	INDUSTRIAL COLD WATER
—MA—	MA	MEDICAL AIR
—MV—	MV	MEDICAL VACUUM
—NO2—	NO2	NITROUS OXIDE
—N2—	N2	NITROGEN
—OFD—	OFD	OVERFLOW DRAIN PIPING
—O2—	O2	OXYGEN
—RO—	RO	REVERSIS OSMOSIS PIPING
—SD—	SD	STORM DRAIN
—SD—	SD	STORM DRAIN BELOW GRADE OR FLOOR
—SS—	SS	SANITARY WASTE PIPE ABOVE GRADE OR FLOOR
— — —	SS	SANITARY WASTE BELOW GRADE OR FLOOR
	V	VENT PIPE ABOVE OR BELOW FLOOR
—V—	VAC	VACUUM (LAB)
—WS—	WS	AUTOMATIC WET SPRINKLER PIPING
	BV	BALL VALVE
	CFF	CAP FOR FUTURE
		CHECK VALVE - SWING TYPE
		DIRECTION OF FLUID FLOW
	FCO/GCO	FLOOR CLEANOUT/GRADE CLEANOUT
	FD	FLOOR DRAIN
	FS	FLOOR SINK
	GV	GATE VALVE
		GAS COCK
	HB	HOSE BIBB
		LINE CONTINUED
	UP	PIPE UP
	DN	PIPE DOWN
		PIPE RISE OR DROP
		PIPE CONNECTION FROM TOP
		PIPE CONNECTION FROM BOTTOM
		PIPE CONNECTION FROM SIDE
	POC	POINT OF NEW CONNECTION
	POD	POINT OF DEMOLITION
	RPBP	REDUCED PRESSURE BACKFLOW PREVENTER
SLOPE		DIRECTION OF SLOPE FOR PIPE
		SPRINKLER FLOOR CONTROL VALVE ASSEMBLY
		UNION
	WCO	WALL CLEANOUT
	WHA	WATER HAMMER ARRESTER

PLUMBING LEGEND CONT.

SYMBOL	ABBREV	DESCRIPTION
	ABBREV	ABBREVIATION
	AE	ACETYLENE
	AFF	ABOVE FINISHED FLOOR
	AP	ACCESS PANEL
	CFF	CAP FOR FUTURE
	CP	CHROME PLATED
	DN	DOWN
	(E)	EXISTING
	(ER)	EXISTING TO BE RELOCATED
	FFE	FINISHED FLOOR ELEVATION
	(F)	FUTURE
	I.E.	INVERT ELEVATION
	(N)	NEW
	NTS	NOT TO SCALE
	PD	PUMP DISCHARGE
	(R)	RELOCATE
	SAD	SEE ARCHITECTURAL DRAWINGS
	SCD	SECONDARY CONDENSATE DRAIN
	SCD	SEE CIVIL DRAWINGS
	SED	SEE ELECTRICAL DRAWINGS
	SL	SLOPE
	SMD	SEE MECHANICAL DRAWINGS
	SOV	SHUT-OFF VALVE
	SPD	SPRINKLER DRAIN
	SSD	SEE STRUCTURAL DRAWINGS
	S/W (P)	PUMPED SANITARY WASTE
	TYP	TYPICAL
	TPL	TRAP PRIMER LINE
	UON	UNLESS OTHERWISE NOTED
	UTR	UP THROUGH ROOF
	VR	VENT RISE
	VTR	VENT THRU ROOF

GENERAL NOTES

1. IT IS RESPONSIBILITY OF THE CONTRACTOR TO VERIFY ALL CONDITIONS IN THE FIELD BEFORE COMMENCEMENT OF WORK. THE CONTRACTOR SHALL ALSO REPORT TO THE ARCHITECT DISCREPANCIES OR INCONSISTENCIES BETWEEN THE SPECIFIED DESIGN AND EXISTING CONDITIONS FOR CLARIFICATION PRIOR TO COMMENCEMENT OF THE WORK. ABSOLUTE ACCURACY OF DRAWING CAN NOT BE GUARANTEED. WHILE EVERY EFFORT HAS BEEN MADE TO COORDINATE THE LOCATION OF EXISTING EQUIPMENT, PIPING, ETC., IT IS THE RESPONSIBILITY OF THE CONTRACTOR TO COORDINATE THE EXACT REQUIREMENTS GOVERNED BY ACTUAL JOB CONDITIONS.
2. REPORT TO ARCHITECT, IN WRITING, CONDITIONS WHICH WILL PREVENT PROPER PROVISION OF THIS WORK.
3. THE SUBMISSION OF BID PROPOSAL SHALL BE CONSIDERED AS CONCLUSIVE EVIDENCE THAT THE CONTRACTOR IS THOROUGHLY FAMILIAR WITH THE INTENT OF THE CONTRACT DOCUMENTS AND SCOPE OF WORK. THE CONTRACTOR, PRIOR TO BIDDING, SHALL VISIT THE JOB SITE, CHECK SITE CONDITION RELATED TO HIS WORK AND SHALL IN THE BID PROPOSAL INCLUDE ALL LABOR AND MATERIAL REQUIRED TO COMPLETE THE SYSTEM.
4. CONTRACTOR SHALL COMPLETE THE WORK WITH MINIMUM INTERFERENCE WITH EXISTING SYSTEMS. ANY SHUTDOWN OF THE EXISTING SYSTEM SHALL BE COORDINATED WITH THE GENERAL CONTRACTOR AND THE OWNER'S REPRESENTATIVE TWO WEEKS IN ADVANCE.
5. ALL WORK UNDER THIS DIVISION SHALL BE COORDINATED WITH OTHER TRADES.
6. IN THE AREA OF NEW CONSTRUCTION WILL BE FOUND A NUMBER OF EXISTING SERVICES. PROTECT ALL ACTIVE LINES AND MAINTAIN THE SAME IN GOOD OPERATING CONDITION.
7. PLUG OR CAP ACTIVE PIPING OR DUCTWORK BEHIND OR BELOW FINISH AS REQUIRED OR INDICATED. DO NOT LEAVE LONG DEAD-END BRANCHES EXCEPT VERTICAL CONDENSATE IN WALLS, CAP OR PLUG AS CLOSE AS POSSIBLE TO ACTIVE LINE.
8. DISPOSE OF REMOVED FIXTURES AND EQUIPMENT AS DIRECTED BY OWNER'S REPRESENTATIVE OR TURN OVER REMOVED FIXTURES AND EQUIPMENT AS SO DIRECTED.
9. DISCONNECT, REMOVE OR RELOCATE MATERIAL, EQUIPMENT, PLUMBING FIXTURES, PIPING AND OTHER WORK NOTED AND REQUIRED BY REMOVAL OR CHANGES IN CONSTRUCTION.
10. PROTECT BUILDING STRUCTURES, AND ADJACENT FINISHED SURFACES DURING CONSTRUCTION. PATCH, REPAIR AND REFINISH EXISTING WORK DAMAGED BY WORK UNDER THIS DIVISION TO MATCH ADJACENT UNDISTURBED AREAS. PATCHING AND REFINISHING IS TO BE PERFORMED BY WORKMEN SKILLED IN THE TRADES INVOLVED. DO NOT CUT ANY STRUCTURAL MEMBERS WITHOUT THE REVIEW AND APPROVAL OF THE STRUCTURAL ENGINEER.
11. ALL MATERIALS AND WORKMANSHIP ARE SUBJECT TO REVIEW AND APPROVAL BY THE ARCHITECT. ANY PORTION OF THE WORK FOUND TO BE DEFECTIVE SHALL BE REPLACED BY THE CONTRACTOR AS PART OF THIS CONTRACT AT NO ADDITIONAL COST TO THE OWNER.
12. ANY PIPING OFFSETS REQUIRED AS RESULT OF JOB CONDITIONS, OR LACK OF COORDINATION WITH OTHER TRADES SHALL BE PROVIDED BY THE CONTRACTOR AT NO ADDITIONAL COST TO OWNER AND IS SUBJECT TO REVIEW BY THE ARCHITECT.
13. ALL TRAPS WILL BE PRIMED IF REQUIRED TO PROVIDE WATER SEAL FOR PREVENTION OF DRYING AND ALLOWING FUMES TO EXIT UP THROUGH DRAINS.
14. INSULATE HOT WATER PIPING SUPPLY AND RETURN. INSULATE COLD WATER PIPING LOCATED EXPOSED IN TEMPERED ROOMS, IN CRAWL SPACE OR ATTIC AREA, AND EXPOSED OUTSIDE UNDER OVERHANGS. PIPING EXPOSED TO RAIN SHALL BE INSULATED WITH CLOSED CELL INSULATION. INSULATION SHALL BE PAINTED TO MATCH THE SURROUNDING.
15. FOR PIPES PENETRATING WALL, PROVIDE ESCUTCHEON ALL EXPOSED LOCATIONS.

FIXTURE UNIT SCHEDULE

FIXTURE TYPE	QUANTITY	DRAINAGE FU	DRAINAGE TOTAL FUs	WATER 75% FU	WATER TOTAL FUs	CW	HW
WATER CLOSET (PUBLIC)	27	6	162	5	135	135	–
URINAL (WATERLESS)	8	0	0	0	0	0	–
LAVATORY	13	2	26	1	13	9.75	9.75
DRINKING FOUNTAIN	3	1	3	.5		1.5	–
SINK: WASH	8	2	16	3	24	18	18
KITCHEN/LAB (SINGLE)	2	2	4	2	4	3	3
JANITOR (MOP SINK)	2	3	6	3	6	4.5	4.5
LAB (DOUBLE)	2	3	6	3	33	12.4	12.4
SHOWER	2	2	4	2	4	3	3
DISHWASHER/GLASSWASHER	1	–	–	5	5	3.75	3.75
FLOOR DRAIN/FLOOR SINK	14	1	14	–	–	0	–
OTHERS: HOSE BIBBS	5	–	–	2.5	12.5	12.5	–

SUB-TOTAL FUS 241 FUS — 211 WFUS — 54.5
15% FUTURE 36 FUS — 32 WFUS
SUB-TOTAL FUS 277 FUS — 243 WFUS
EQUIVALENT PIPE SIZE PER UPC

WATER DEMAND 100 GPM (CPC APPENDIX A)
WATER MAKE-UP 10
TOTAL DEMAND 110 GPM
DESIGN PIPE SIZE 4" @1.25 PSI/100 FT OF PIPE

PLUMBING DRAWING INDEX

SHEET NO	DESCRIPTION	DD	75% CD	DSA
P0.01	PLUMBING LEGENDS, ABBREVIATIONS, & GENERAL NOTES	X	X	X
P2.11	FIRST FLOOR PLUMBING PLAN BUILDING A	X	X	X
P2.12	FIRST FLOOR PLUMBING PLAN BUILDING B	X	X	X
P2.21	SECOND FLOOR PLUMBING PLAN BUILDING A	X	X	X
P2.22	PLUMBING ROOF PLAN BUILDING B	X	X	X
P2.31	PLUMBING ROOF PLAN BUILDING A	X	X	X
P2.32	PLUMBING ROOF PLAN BUILDING B		X	X
P3.01	ENLARGED PLUMBING PLANS		X	X
P4.01	PLUMBING SCHEDULES	X	X	X
P6.01	PLUMBING DETAILS	X	X	X
P6.02	PLUMBING DETAILS		X	X
P6.03	PLUMBING DETAILS		X	X

APPROVAL STAMP
IDENTIFICATION STAMP
DIVISION OF THE STATE ARCHITECT
APPL 02- 107417
AC *[initials]* FLS *TH* SS *NL*
DATE: *12/21/05*

NO.	ISSUED FOR	DATE
1	DSA APPROVAL SET	12/08/05

REGISTERED PROFESSIONAL ENGINEER
GEORGE L. ARELLANO
No. M29691
Exp. 06-30-06
Mechanical
STATE OF CALIFORNIA
Date Signed 12/06/05
CERTIFIED BY

K M D
KAPLAN McLAUGHLIN DIAZ
ARCHITECTURE PLANNING
222 VALLEJO SAN FRANCISCO, CA 94111
(415) 398-5191 FAX (415) 394-7158

ALFATECH
120 MONTGOMERY STREET, SUITE 715 415-403-3000
SAN FRANCISCO, CALIFORNIA 94104 FAX: 415-788-6040
SAN JOSE • NEW JERSEY • SINGAPORE • AUSTRALIA
AT Project No. 204231

SOLANO
COMMUNITY COLLEGE

SCCD
VALLEJO CENTER
Contract # A003.6123.01.V1

PROJECT NO. 419-201
DATE 12-08-05

PLUMBING LEGENDS,
ABBREVIATIONS,
& GENERAL NOTES
AS BUILTS

P0.01

PLOT DATE:

COPYRIGHT © 2004 BY KMD (KAPLAN McLAUGHLIN DIAZ). ALL RIGHTS RESERVED.

NOTES:

1. CONTRACTOR SHALL COORDINATE PLUMBING SHOP DRAWINGS WITH ALL TRADES SO AS TO NOT ROUTE ANY CONDUIT, WIRING PIPING DUCTWORK, OR OTHER BUILDING SYSTEM UNDER HEAT PUMPS OR HEAT PUMP ACCESS LOCATIONS.

KEYED NOTES:

1. CONNECT CONDENSATE DRAIN PIPE TO HEAT PUMP (SEE MECHANICAL DRAWINGS).
2. SEE CIVIL DRAWINGS FOR CONTINUATION.
3. 2" VENT RISER TO 2ND FLOOR
4. 4" W RISER FROM 2ND FLOOR
5. 4" SOLID PIPING CONNECT TO PERFORATED SUBDRAINAGE PIPING FROM EXTERIOR PERIMETER OF ELEVATOR PIT. SEE SIMILAR DETAIL 5/A7.01 AND 1 & 3/L6.09.
6. CONNECT 4" PERFORATED PIPE TO STORM DRAINAGE SYSTEM.
7. PROVIDE OFD WITH DOWNSPOUT NOZZLE AND SPILL TO GRADE.
8. 3/4" CD DN. IN WALL, CONNECT TO LAV TAIL PIECE.
9. INSTALL PIPING UNDER MIDDLE LANDING OF STAIRWAY.

SEE SHEET P2.12 FOR CONTINUATION

SEE ENLARGED PLAN FOR PIPING ABOVE FLOOR 1/P3.01

1/P2.11 FIRST FLOOR PLUMBING PLAN-BUILDING A
1/8"=1'-0"

APPROVAL STAMP
IDENTIFICATION STAMP
DIVISION OF THE STATE ARCHITECT
APP. 02- 107417
FLS TH SS PVC
DATE: 12/21/05

NO.	ISSUED FOR	DATE
1	DSA APPROVAL SET	12/08/05

REGISTERED PROFESSIONAL ENGINEER GEORGE L. ABELLERA No. M29691 Exp. 06-30-06 Mechanical STATE OF CALIFORNIA
Date Signed 12/06/05
CERTIFIED BY

K M D
KAPLAN McLAUGHLIN DIAZ
ARCHITECTURE PLANNING
222 VALLEJO SAN FRANCISCO, CA 94111
(415) 398-5191 FAX (415) 394-7158

ALFATECH
130 MONTGOMERY STREET, SUITE 710 415-403-5000
SAN FRANCISCO, CALIFORNIA 94104 FAX: 415-738-5040
SAN JOSE • NEW JERSEY • SINGAPORE • AUSTRALIA
AT Project No. 39231

SOLANO COMMUNITY COLLEGE

SCCD
VALLEJO CENTER
Contract # A003.6123.01.V1

PROJECT NO.	DATE
419-201	12-08-05

FIRST FLOOR PLUMBING PLAN BUILDING A
AS BUILTS

P2.11

PLOT DATE:

COPYRIGHT © 2004 BY KMD (KAPLAN McLAUGHLIN DIAZ). ALL RIGHTS RESERVED.

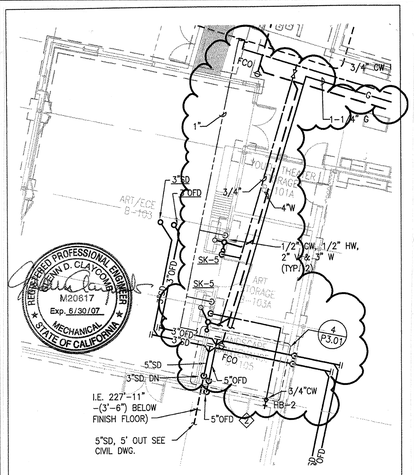

REFERENCE: 1/P2.12
SCALE: 1/8"=1'-0"

ALFATECH CAMBRIDGE	PROJECT NO.	PROJECT NAME
120 MONTGOMERY STREET, SUITE 715 415-403-3000 SAN FRANCISCO, CALIFORNIA 94104 FAX: 415-788-6040 SAN JOSE • NEW JERSEY • SINGAPORE • AUSTRALIA AT Project No. 20231	204231	SCCD VALLEJO CENTER – IB6R2
	DATE	DRAWING TITLE
	01/30/07	FIRST FLOOR PLUMBING PLAN BUILDING "B"

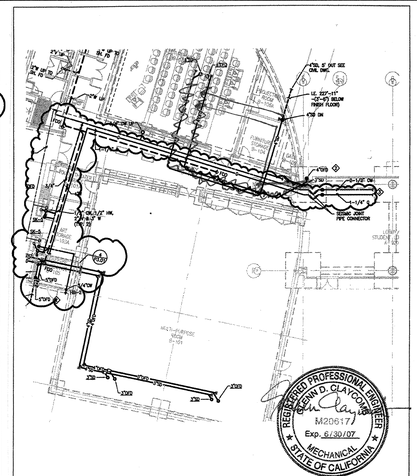

REFERENCE: 2/P2.12
SCALE: 1/8"=1'-0"

ALFATECH CAMBRIDGE	PROJECT NO.	PROJECT NAME
120 MONTGOMERY STREET, SUITE 715 415-403-3000 SAN FRANCISCO, CALIFORNIA 94104 FAX: 415-788-6040 SAN JOSE • NEW JERSEY • SINGAPORE • AUSTRALIA AT Project No. 20231	204231	SCCD VALLEJO CENTER – IB6R2
	DATE	DRAWING TITLE
	01/30/07	FIRST FLOOR PLUMBING PLAN BUILDING "B"

Copy sent by e-mail to: Dowdle & Sons; Long Electric, Associated Constructors on 11/6/06

Ralph Larsen & Son, Inc.
General Contractor License No. 185301
303 8th Avenue
San Mateo, CA 94401-4221
Phone (650)340-6100
Fax (650)579-0240

Request for Information 174

Detailed, RFIs Grouped by RFI Number

Copy sent by email to: East Bay on 2/3/07

Vallejo Center for Solano Community College Dist
Northgate Business Park
245 Columbus Parkway
Vallejo, CA 94591

Project # 2604
Tel: (707) 649-8327 Fax: (707) 553-9728

Ralph Larsen & Son, Inc.

RFI # 174
Answer Company | Answered By | Author Company | Author RFI Number
Ralph Larsen & Son, Inc.
300 8th Avenue
San Mateo, CA. 94401

Date Created: 11/3/2006
Authored By
Jay Tucker

Co-Respondent

Subject: Need hanger detail for pipe support at LOBBY ROOF
Discipline | Category

Cc: Company Name | Contact Name | Copies | Notes

Date Received: 11/6/2006

Question
The Contract Drawings show several pipe systems that must be supported from the roof structure between GRID LINES 5 TO 7 and between GRID N TO P. GRID LINE 5 is the only detail we have found that provides information on support of pipes from the structure. We have not found any details for support from the roof structure that apply to the structure in the area. This area of the roof structure has metal decking (type C3) with no concrete fill) over the steel beams. Detail 9/M6.04 refers us to 20/S7.02 for connection to metal decking. We are unable to utilize attachment detail 20/S7.02 for support of pipes in this area.
1. Are there any details provided within the Contract Documents that could be used in this areas?
2. Does the attached details showing the supports that we have already installed for the pipe supports in this areas. The Project Inspector want all support connections to the structure to be reviewed by the Architect and Structural Engineer. See NOTE 2 of detail 9/M6.01. Our understanding is that this note is being applied to all supports (not just roof supports).
2. Is the support method shown in the attached sketches acceptable for support of all piping between GRID LINES 5 to 7 and between GRID N to P?

Suggestion

Answer
Date Answered:
• DASSE TAKENO EXCEPTION TO THE SUPPORT OF M/E/P PIPES AS SHOWN ON THIS RFI.
• G/C TO COORDINATE BRACING PER SMACNA GUIDELINES.
Chi-hung Cheng / DASSE.

Printed by Manager | Printed on: 11/3/2006 | RALPH | Page 1

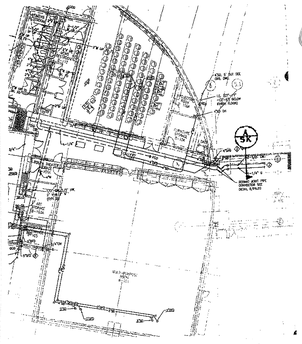

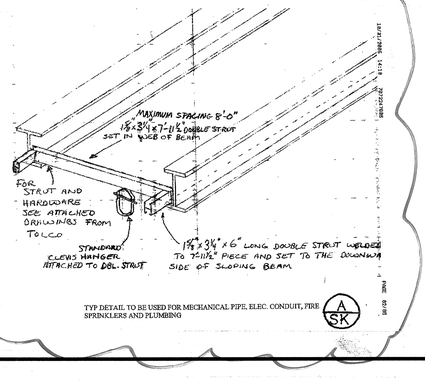

TYP DETAIL TO BE USED FOR MECHANICAL PIPE, ELEC. CONDUIT, FIRE SPRINKLERS AND PLUMBING

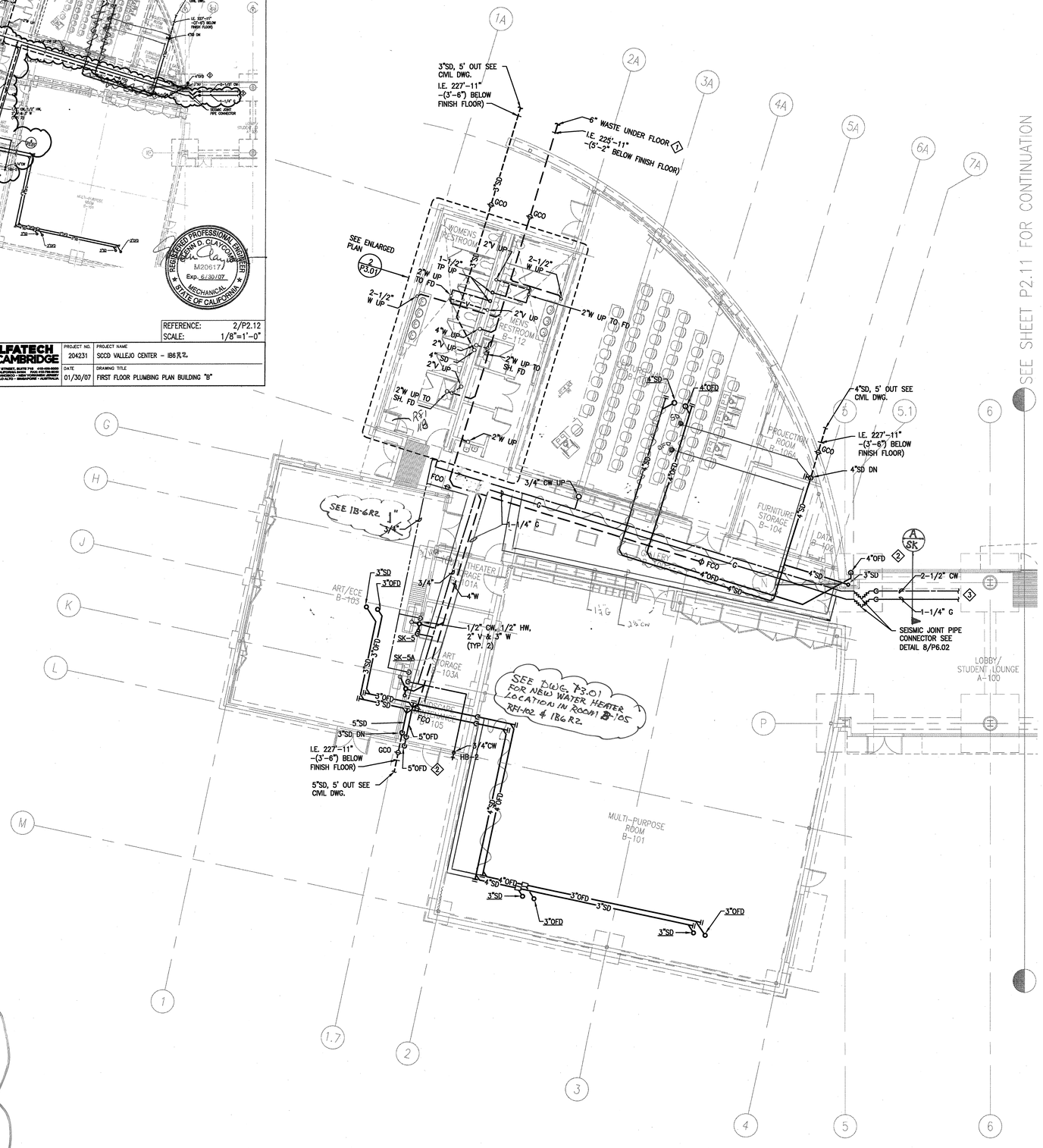

SEE SHEET P2.11 FOR CONTINUATION

NOTES:

1. CONTRACTOR SHALL COORDINATE PLUMBING SHOP DRAWINGS WITH ALL TRADES SO AS TO NOT ROUTE ANY CONDUIT, WIRING PIPING DUCTWORK, OR OTHER BUILDING SYSTEM UNDER HEAT PUMPS OR HEAT PUMP ACCESS LOCATIONS.

KEYED NOTES:

1. SEE CIVIL DRAWINGS FOR CONTINUATION.
2. PROVIDE OFD WITH DOWN SPOUT NOZZLE AND SPILL TO GRADE
3. SEE P2.21 FOR CONT.

1 M2.12 FIRST FLOOR PLUMBING PLAN-BUILDING B
1/8"=1'-0"

APPROVAL STAMP
IDENTIFICATION STAMP
DIVISION OF THE STATE ARCHITECT
APP. NO. 107417
AD FLS TH SS ML
DATE: 12/21/05

NO.	ISSUED FOR	DATE
1	DSA APPROVAL SET	12/08/05

REGISTERED PROFESSIONAL ENGINEER GEORGE L. ABELLAN No. M29691 Exp. 06-30-06 MECHANICAL STATE OF CALIFORNIA
Date Signed 12/06/05
CERTIFIED BY

K M D
KAPLAN McLAUGHLIN DIAZ
ARCHITECTURE PLANNING
222 VALLEJO SAN FRANCISCO, CA 94111
(415) 398-5191 FAX (415) 394-7158

ALFATECH
120 MONTGOMERY STREET, SUITE 715 415-403-3000
SAN FRANCISCO, CALIFORNIA 94104 FAX: 415-788-6040
SAN JOSE • NEW JERSEY • SINGAPORE • AUSTRALIA
AT Project No. 20231

SOLANO COMMUNITY COLLEGE

SCCD
VALLEJO CENTER
Contract # A003.6123.01.V1

PROJECT NO.	DATE
419-201	12-08-05

FIRST FLOOR PLUMBING PLAN BUILDING B
AS BUILTS

P2.12

PLOT DATE:

COPYRIGHT © 2004 BY KMD (KAPLAN McLAUGHLIN DIAZ). ALL RIGHTS RESERVED.

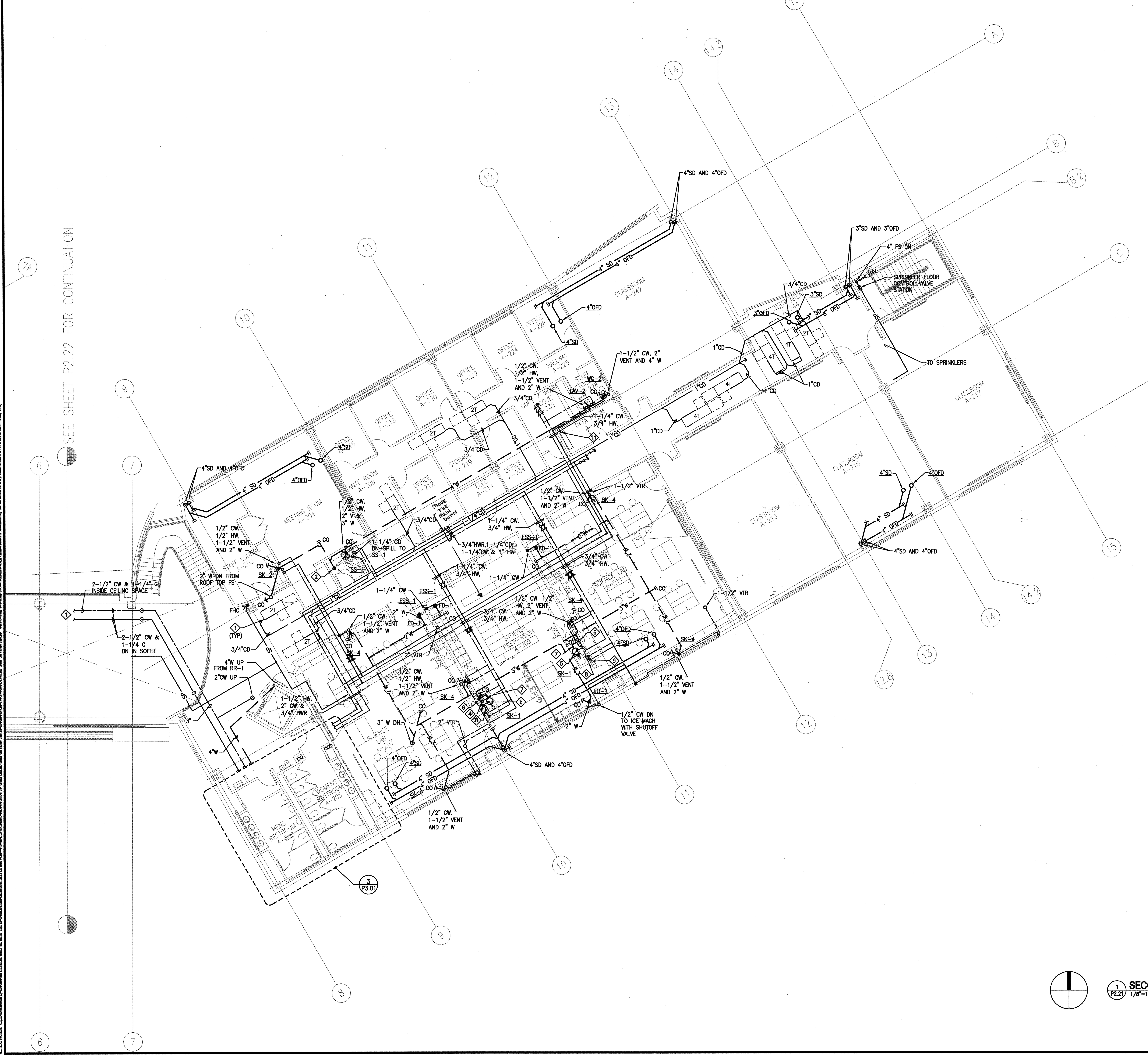

NOTES:

1. CONTRACTOR SHALL COORDINATE PLUMBING SHOP DRAWINGS WITH ALL TRADES SO AS TO NOT ROUTE ANY CONDUIT, WIRING PIPING DUCTWORK, OR OTHER BUILDING SYSTEM UNDER HEAT PUMPS OR HEAT PUMP ACCESS LOCATIONS.

KEYED NOTES:

1. CONNECT CD TO HEAT PUMP–SEE MECHANICAL DRAWINGS.
2. 4" WASTE LINE DOWN TO FIRST FLOOR.
3. 2" VENT RISER TO 2ND FLOOR
4. 1/2" CW & 1/2" HW TO DISHWASHER WITH AIR AIR GAP.
5. AT UNDERCOUNTER NEUTRALIZATION 30 TANK, 2" VENT AND 3" W.
6. 1/2" CW, 3" W AND 2" VTR
7. IN–LINE MOUNT pH SENSOR. 2" LW. 1–1/2"LWV
8. pH MONITOR PANEL, 120 VOLT. MOUNT ABOVE COUNTER (60" A.F.F)
9. PROVIDE 1/2" CW WITH SHUTOFF TO MILLIPORE POLISHER, WALL MOUNTED 84" A.F.F.
10. SEE P2.12 FOR CONT.
11. CONNECT (AC 2–1) CD TO SINK (SK–2) TAIL PIECE

1 / P2.21 **SECOND FLOOR PLUMBING PLAN-BUILDING A**
1/8"=1'-0"

APPROVAL STAMP
IDENTIFICATION STAMP
DIVISION OF THE STATE ARCHITECT
APPL 02– 107417
AC FLS TH SS RK
DATE: 12/21/05

NO.	ISSUED FOR	DATE
1	DSA APPROVAL SET	12/08/05

REGISTERED PROFESSIONAL ENGINEER GEORGE L. ARELLANO No. M29691 Exp. 06-30-06 Mechanical STATE OF CALIFORNIA
Date Signed 12/06/05
CERTIFIED BY

K M D
KAPLAN McLAUGHLIN DIAZ
ARCHITECTURE PLANNING
222 VALLEJO SAN FRANCISCO, CA 94111
(415) 398-5191 FAX (415) 394-7158

ALFATECH
120 MONTGOMERY STREET, SUITE 715 415-403-3000
SAN FRANCISCO, CALIFORNIA 94104 FAX: 415-788-6040
SAN JOSE · NEW JERSEY · SINGAPORE · AUSTRALIA
AT Project No. 204231

SOLANO COMMUNITY COLLEGE

SCCD
VALLEJO CENTER
Contract # A003.6123.01.V1

PROJECT NO.	DATE
419-201	12-08-05

SECOND FLOOR PLUMBING PLAN BUILDING A
AS BUILTS

P2.21

PLOT DATE:

COPYRIGHT © 2004 BY KMD (KAPLAN McLAUGHLIN DIAZ). ALL RIGHTS RESERVED.

Copy sent by e-mail to: Associated Constructors on 11/29/06

Ralph Larsen & Son, Inc.
General Contractors License No. 185341
300 8th Avenue
San Mateo, CA 94401-4221
Phone: (650) 579-0339
Fax: (650) 579-0249

Request for Information 163

Detailed, RFIs Grouped by RFI Number

Vallejo Center for Solano Community College Dis
Northgate Business Park
545 Columbus Parkway
Vallejo, CA 94591

Project # 2604
Tel: (707) 649-8327 Fax: (707) 553-9728

Ralph Larsen & Son, Inc.

RFI #: 163

Date Created: 10/23/2006

Answer Company | Answered By | Author Company | Authored By
Ralph Larsen & Son, Inc. | Jay Tucker
300 8th Avenue
San Mateo, CA 94401

Co-Respondent | Author RFI Number

Subject | Discipline | Category
Need information for Plumbing work See DWG.
P2.31 & DWG P2.22.

Cc: Company Name | Contact Name | Copies | Notes

Date Required: 11/24/2006

Question
Drawing P2.31 shows a FS-2 located near GRID LINE 9 & B. We have not found any specifications or model numbers for this ASSUMED FLOOR SINK. Our review of the FLUID COOLER CT-1 did not find any need for a drain on the NORTH side of this unit. The submittal data for the FLUID COOLER shows the drain outlet and overflow outlet on the SOUTH side of the FLUID COOLER. If another drain (connected to the sanitary system) is required on the North side of the FLUID COOLER, this drain will need to have a clamping ring in order to work with the BUILT UP ROOFING SYSTEM.
1. What will this FS-2 be used for?
2. What is this item (FS-2 and where can we find the make and model number for FS-2?
Drawing P2.31 shows a RR-1 located near GRID LINE 9 & about GRID B.5.
3. Is this RR-1 item intended to be the same as RF-1 listed in the (DWG P4.01) PLUMBING FIXTURE SCHEDULE?
Drawing P2.31 does not show any condensate drain pipes from ROOFTOP units (RHP-F 5, 6, 7, or 8).
4. Do you want to add condensate piping at each of the (TYPE RHP-F) roof top units?
5. If the answer to question #2 is yes, will you provide direction on the CONDENSATE piping if it is needed?
Drawing P2.22 shows condensate piping on the roof. The typical pipe support details 1/A8.53 and 2/A8.53 (for pipe support on roof) are too tall to achieve the minimum 8 inches of roofing turn up and also achieve slope to the roof drain.
6. May we use the attached sketch for support of CONDENSATE piping above the roofing?

Suggestion

Answer | Date Answered:
1. FS-2 is not required.
2. See reply to 1.
3. RR-1 and RF-1 are the same.
4. Yes.
5. Unit condensate drains should follow similar requirements shown on P2.22 and be piped to nearest roof drains.
6. Attached detail is acceptable to ATCG if acceptable to roofer and KMD.
Angelo Dominguez - ATCG, Inc. 11/28/06

Prolog Manager | Printed on: 10/23/2006 RALPH | Page 1

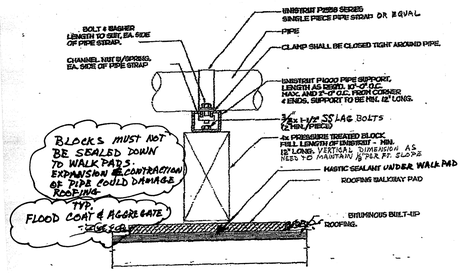

RFI-163

CONDENSATE PIPE ON ROOF SUPPORT

SCALE : NONE

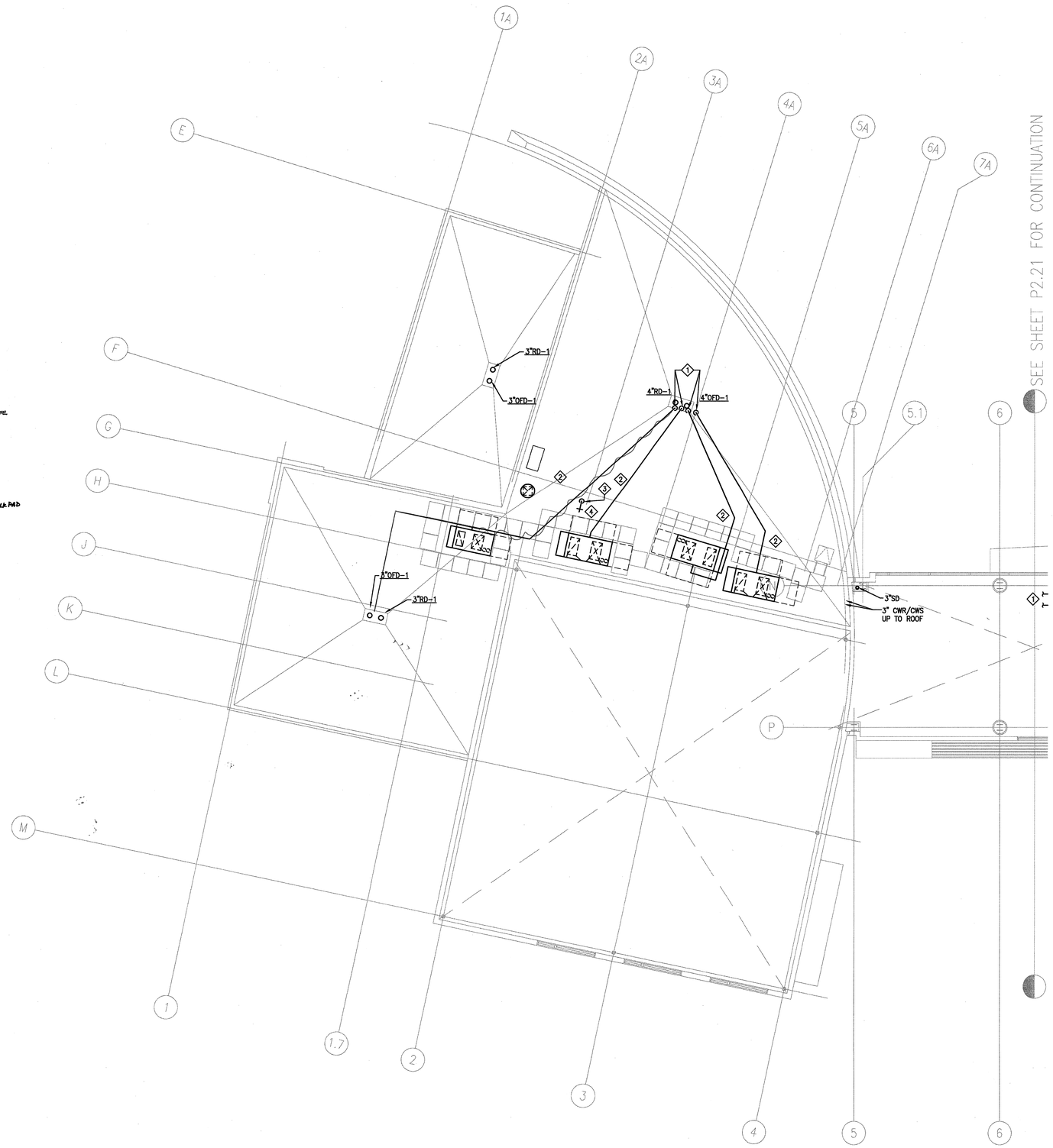

NOTES:

1. CONTRACTOR SHALL COORDINATE PLUMBING SHOP DRAWINGS WITH ALL TRADES SO AS TO NOT ROUTE ANY CONDUIT, WIRING PIPING DUCTWORK, OR OTHER BUILDING SYSTEM UNDER HEAT PUMPS OR HEAT PUMP ACCESS LOCATIONS.

KEYED NOTES:

1. SPILL CD TO STORM DRAIN.
2. CONNECT TO CONDENSATE DRAIN FROM HVAC UNIT. (SEE MECHANICAL DRAWINGS).
3. 3/4" CW DN.
4. HOSE BIBB WITH VACUUM BREAKER.

1 P2.22 **ROOF PLUMBING PLAN- BUILDING B**
1/8"=1'-0"

APPROVAL STAMP
IDENTIFICATION STAMP
DIVISION OF THE STATE ARCHITECT
APP. NO. 107417
ACCESS FLS TH SS AHL
DATE: 12/21/05

NO.	ISSUED FOR	DATE
1	DSA APPROVAL SET	12/08/05

REGISTERED PROFESSIONAL ENGINEER GEORGE L. ARELLANO No. M29691 Exp. 06-30-08 Mechanical STATE OF CALIFORNIA
Date Signed 12/06/05
CERTIFIED BY

K M D
KAPLAN McLAUGHLIN DIAZ
ARCHITECTURE PLANNING
222 VALLEJO SAN FRANCISCO, CA 94111
(415) 398-5191 FAX (415) 394-7156

ALFATECH
120 MONTGOMERY STREET, SUITE 715 415-402-3000
SAN FRANCISCO, CALIFORNIA 94104 FAX: 415-788-5040
SAN JOSE • NEW JERSEY • SINGAPORE • AUSTRALIA
AT Project No. 29231

SOLANO COMMUNITY COLLEGE

SCCD
VALLEJO CENTER
Contract # A003.6123.01.V1

PROJECT NO. 419-201 | DATE 12-08-05

ROOF
PLUMBING PLAN
BUILDING B
AS BUILTS

P2.22

PLOT DATE:

COPYRIGHT © 2004 BY KMD (KAPLAN McLAUGHLIN DIAZ). ALL RIGHTS RESERVED.

Copy sent by e-mail to: Associated Constructors on 11/29/06

Ralph Larsen & Son, Inc.
General Contractors License No. 185341
300 8th Avenue
San Mateo, CA. 94401-4221
Phone: (650) 579-0239
Fax: (650) 579-0249

Request for Information 163

Detailed, RFIs Grouped by RFI Number

Vallejo Center for Solano Community College Dis
Northgate Business Park
545 Columbus Parkway
Vallejo, CA 94591

Project # 2604
Tel: (707) 649-8327 Fax: (707) 553-9728

Ralph Larsen & Son, Inc.

RFI #: 163

Date Created: 10/23/2006

Answer Company	Answered By	Author Company	Authored By
		Ralph Larsen & Son, Inc. 300 8th Avenue San Mateo, CA 94401	Jay Tucker

Co-Respondent

Author RFI Number

Subject: Need information for Plumbing work See DWG. P2.31 & DWG P2.22.

Discipline

Category

Cc: Company Name | Contact Name | Copies | Notes

Question

Date Required: 11/24/2006

Drawing P2.31 shows a FS-2 located near GRID LINE 9 & B. We have not found any specifications or model numbers for this ASSUMED FLOOR SINK. Our review of the FLUID COOLER CT-1 did not find any need for a drain on the NORTH side of this unit. The submittal data for the FLUID COOLER shows the drain outlet and overflow outlet on the SOUTH side of the FLUID COOLER. If another drain (connected to the sanitary system) is required on the North side of the FLUID COOLER, this drain will need to have a clamping ring in order to work with the BUILT UP ROOFING SYSTEM.
1. What will this FS-2 be used for?
2. What is this item (FS-2 and where can we find the make and model number for FS-2?
Drawing P2.31 shows a RR-1 located near GRID LINE B & about GRID B.5.
3. Is this RR-1 item intended to be the same as RF-1 listed in the (DWG P4.01) PLUMBING FIXTURE SCHEDULE?
Drawing P2.31 does not show any condensate drain pipes from ROOFTOP units (RHP-F 5, 6, 7, or 8).
4. Do you want to add condensate piping at each of the (TYPE RHP-F) roof top units?
5. If the answer to question #2 is yes, will you provide direction on the CONDENSATE piping if it is needed?
Drawing P2.22 shows condensate piping on the roof. The typical pipe support details 1/A8.53 and 2/A8.53 (for pipe support on roof) are too tall to achieve the minimum 8 inches of roofing turn up and also achieve slope to the roof drain.
6. May we use the attached sketch for support of CONDENSATE piping above the roofing?

Suggestion

Answer

Date Answered:

1. FS-2 is not required.
2. See reply to 1.
3. RR-1 and RF-1 are the same.
4. Yes.
5. Unit condensate drains should follow similar requirements shown on P2.22 and be piped to nearest roof drains.
6. Attached detail is acceptable to ATCG if acceptable to roofer and KMD.

Angelo Dominguez - ATCG, Inc. 11/26/06

Prolog Manager Printed on: 10/22/2006 RALPH Page 1

RFI-163

CONDENSATE PIPE ON ROOF SUPPORT

SCALE : NONE

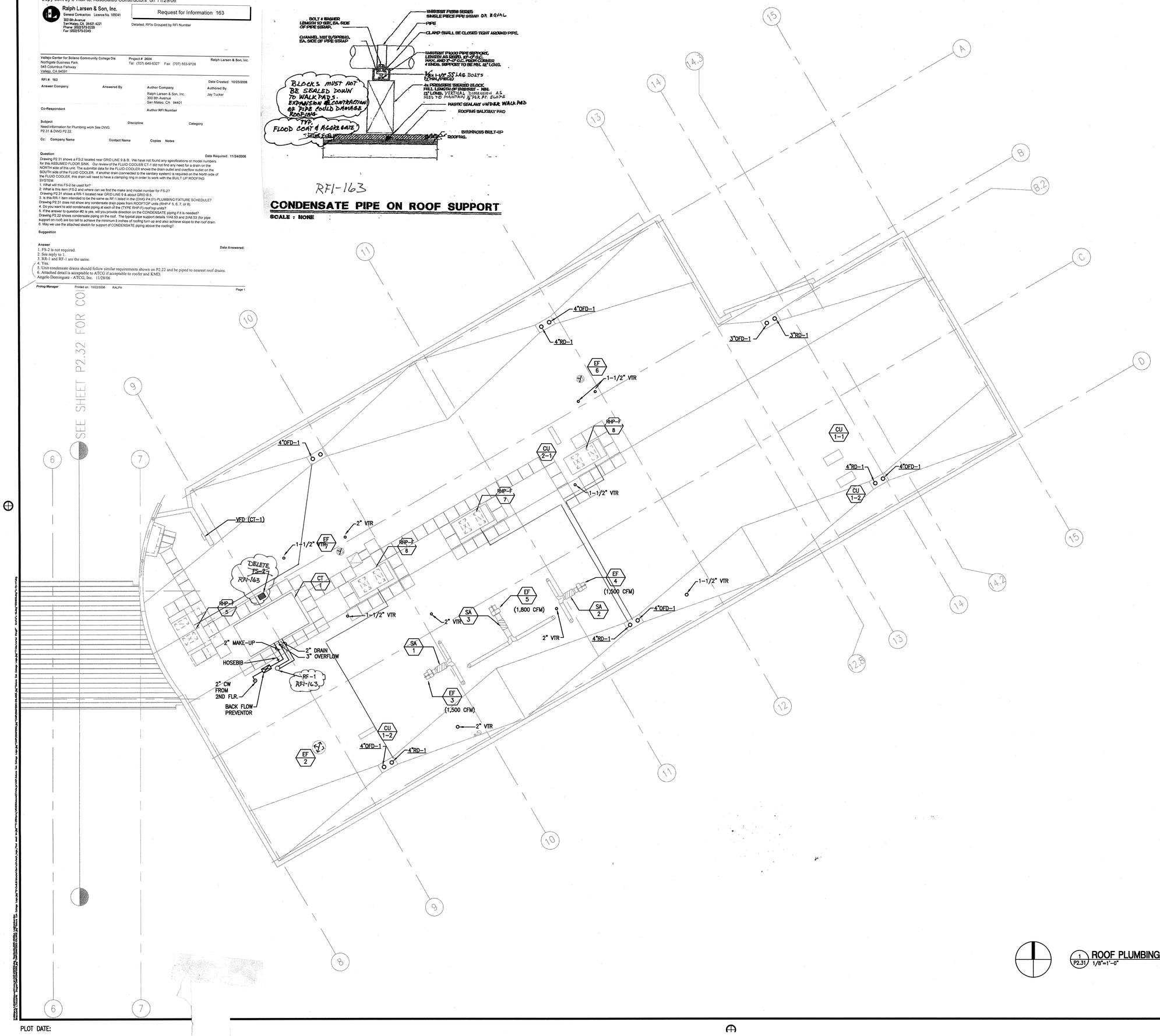

ROOF PLUMBING PLAN- BUILDING A

1/P2.31 1/8"=1'-0"

APPROVAL STAMP
IDENTIFICATION STAMP
DIVISION OF THE STATE ARCHITECT
App. 02- 107417
ACC FLS PR SS
DATE: 12/21/05

NO.	ISSUED FOR	DATE
1	DSA APPROVAL SET	12/08/05

REGISTERED PROFESSIONAL ENGINEER CHRISTOPHER L. KRELOVE No. M29691 Exp. 06-30-06 Mechanical STATE OF CALIFORNIA

Date Signed 12/06/05
CERTIFIED BY

K M D
KAPLAN McLAUGHLIN DIAZ
ARCHITECTURE PLANNING
222 VALLEJO SAN FRANCISCO, CA 94111
(415) 398-5191 FAX (415) 394-7158

ALFATECH
120 MONTGOMERY STREET, SUITE 715 415-403-3000
SAN FRANCISCO, CALIFORNIA 94104 FAX: 415-788-8040
SAN JOSE • NEW JERSEY • SINGAPORE • AUSTRALIA
AT Project No. 20431

SOLANO COMMUNITY COLLEGE

SCCD
VALLEJO CENTER
Contract # A003.6123.01.V1

PROJECT NO.	DATE
419-201	12-08-05

ROOF
PLUMBING PLAN
BUILDING A
AS BUILTS

P2.31

PLOT DATE:

COPYRIGHT © 2004 BY KMD (KAPLAN McLAUGHLIN DIAZ). ALL RIGHTS RESERVED.

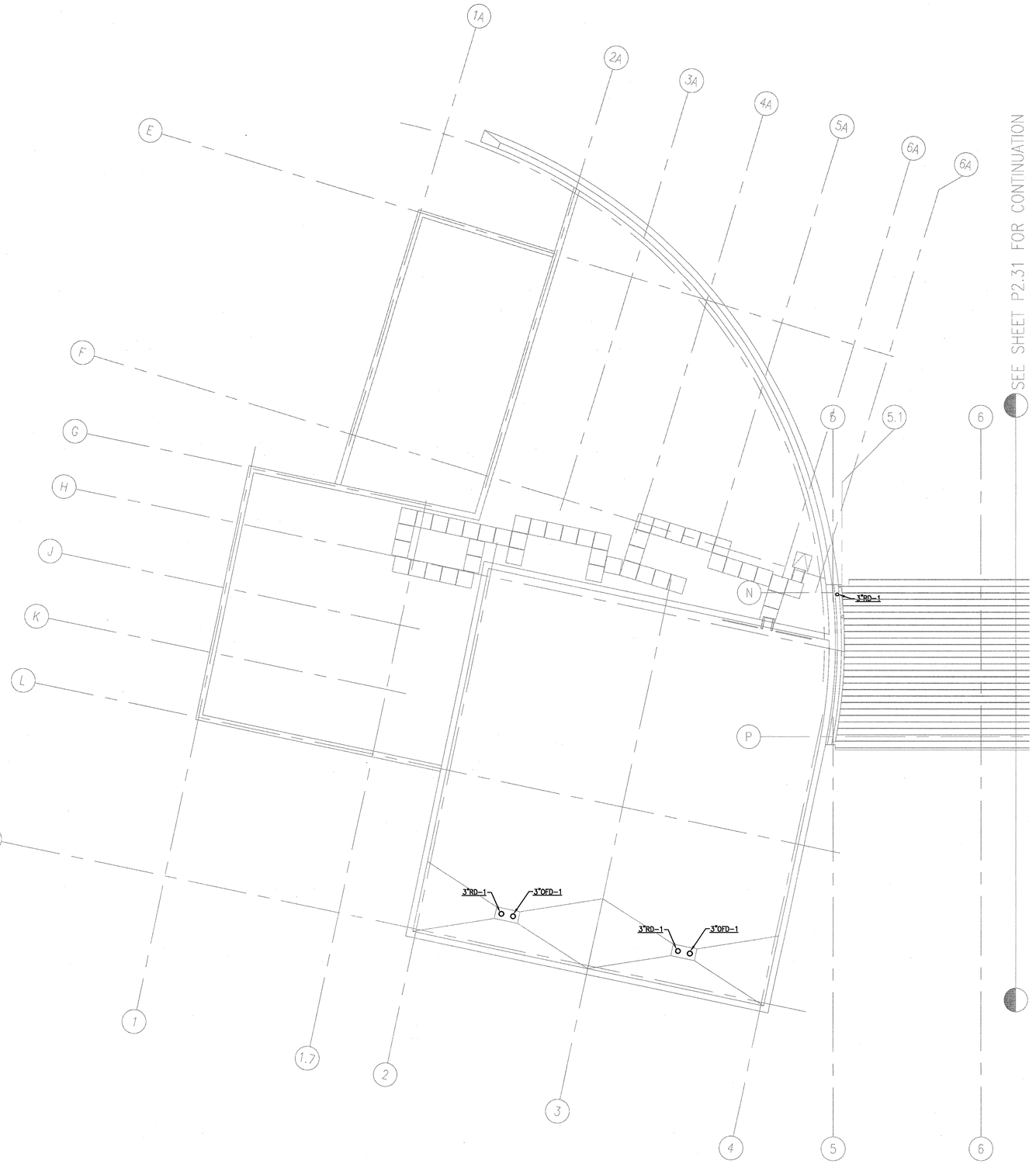

1 P2.32 ROOF PLUMBING PLAN- BUILDING B
1/8"=1'-0"

APPROVAL STAMP
IDENTIFICATION STAMP
DIVISION OF THE STATE ARCHITECT
APP# 07- 107417
AC FLS TH SS MC
DATE: 12/21/05

NO.	ISSUED FOR	DATE
1	DSA APPROVAL SET	12/08/05

REGISTERED PROFESSIONAL ENGINEER
GABRIEL L. ABELLERA
No. M29691
Exp. 06-30-06
Mechanical
STATE OF CALIFORNIA
Date Signed 12/06/05
CERTIFIED BY

K M D
KAPLAN McLAUGHLIN DIAZ
ARCHITECTURE PLANNING
222 VALLEJO SAN FRANCISCO, CA 94111
(415) 398-5191 FAX (415) 394-7158

ALFATECH
120 MONTGOMERY STREET, SUITE 715 415-403-3000
SAN FRANCISCO, CALIFORNIA 94104 FAX: 415-758-8040
SAN JOSE • NEW JERSEY • SINGAPORE • AUSTRALIA
AT Project No. 20421

SOLANO COMMUNITY COLLEGE

SCCD
VALLEJO CENTER
Contract # A003.6123.01.V1

PROJECT NO.	DATE
419-201	12-08-05

ROOF
PLUMBING PLAN
BUILDING B
AS BUILTS

P2.32

PLOT DATE:

COPYRIGHT © 2004 BY KMD (KAPLAN McLAUGHLIN DIAZ). ALL RIGHTS RESERVED.

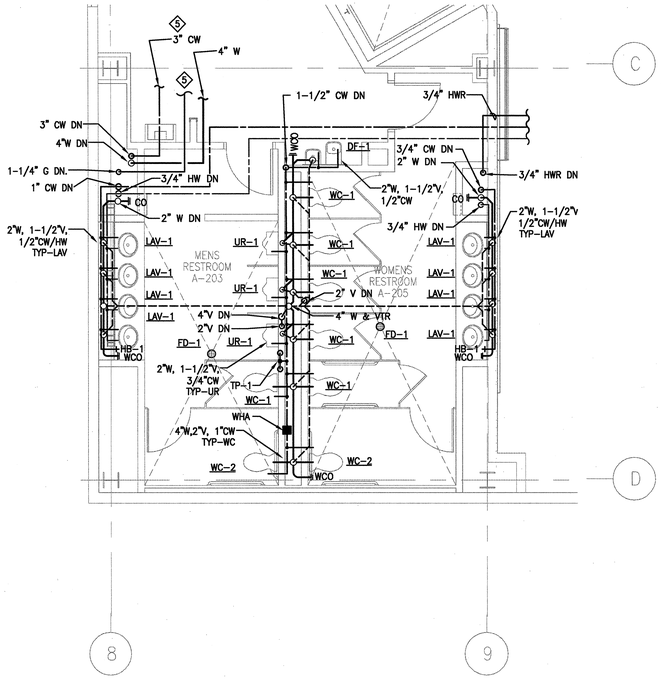

3 P3.01 ENLARGED PARTIAL SECOND FLOOR PLUMBING PLAN - BUILDING A
1/4"=1'-0"

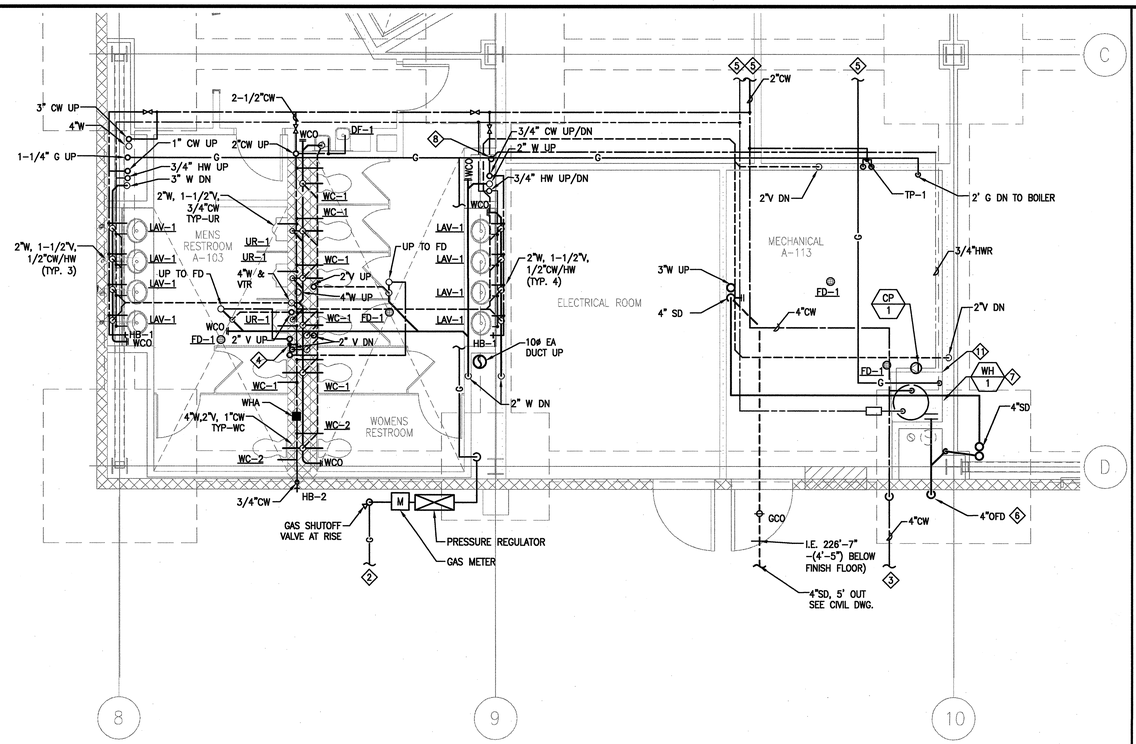

1 P3.01 ENLARGED PARTIAL FIRST FLOOR PLUMBING PLAN - BUILDING A
1/4"=1'-0"

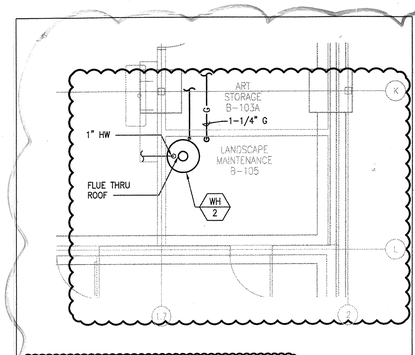

7 PROVIDE (2) LOUVERS WITH 40 SQ. IN. OF NET FREE AREA, HIGH-LOW (1ST OPENING WITHIN 12" AFF, 2ND OPENING WITHIN 12" BOTTOM OF CEILING OR BLDG STRUCTURE) ON EXTERIOR WALL FOR COMBUSTION AIR SUPPLY.

HERSHMAN D. CLAYCOMB M20617 Exp. 6/30/07 MECHANICAL STATE OF CALIFORNIA

REFERENCE: 1/P3.01
SCALE: 1/8"=1'-0"

ALFATECH CAMBRIDGE	PROJECT NO. 204231	PROJECT NAME SCCD VALLEJO CENTER - I86 R2
120 MONTGOMERY STREET, SUITE 715 415-403-5000 SAN FRANCISCO, CALIFORNIA 94104 FAX: 415-788-8040 SAN JOSE • NEW JERSEY • SINGAPORE • AUSTRALIA LOS ANGELES • PALO ALTO • SINGAPORE • AUSTRALIA All Projects: 204231	DATE 01/30/07	DRAWING TITLE ENLARGED PLUMBING PLANS

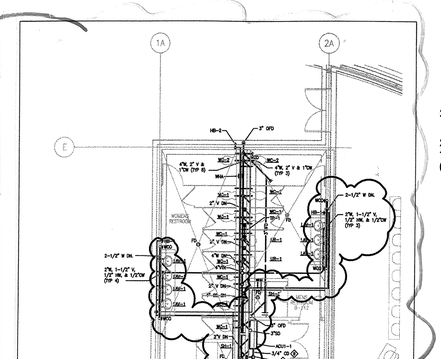

HERSHMAN D. CLAYCOMB M20617 Exp. 6/30/07 MECHANICAL STATE OF CALIFORNIA

REFERENCE: 2/P3.01
SCALE: 1/8"=1'-0"

ALFATECH CAMBRIDGE	PROJECT NO. 204231	PROJECT NAME SCCD VALLEJO CENTER - I86 R2
120 MONTGOMERY STREET, SUITE 715 415-403-5000 SAN FRANCISCO, CALIFORNIA 94104 FAX: 415-788-8040 SAN JOSE • NEW JERSEY • SINGAPORE • AUSTRALIA LOS ANGELES • PALO ALTO • SINGAPORE • AUSTRALIA All Projects: 204231	DATE 01/30/07	DRAWING TITLE ENLARGED PLUMBING PLANS

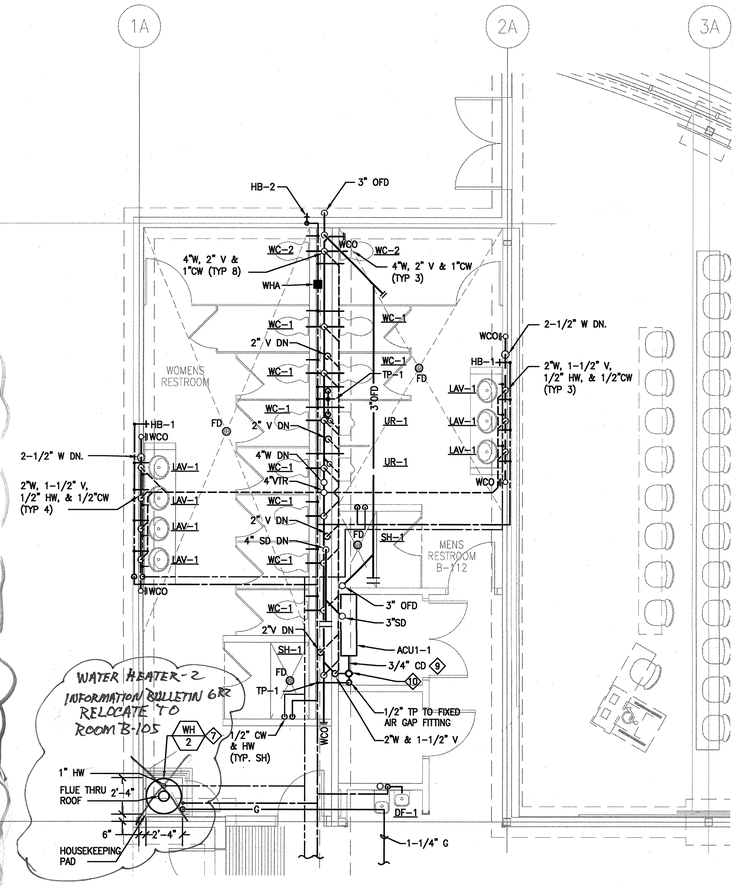

2 P3.01 ENLARGED PARTIAL FIRST FLOOR PLUMBING PLAN - BUILDING B
1/4"=1'-0"

KEYED NOTES:

1. CONNECT CONDENSATE DRAIN PIPE TO HEAT PUMP (SEE MECHANICAL DRAWINGS).
2. SEE CIVIL DRAWINGS FOR CONTINUATION.
3. SEE CIVIL DRAWINGS FOR WATER METER AND BACK FLOW PREVENTOR.
4. TRAP PRIMER, 1-1/2" TP UP AND DN.
5. SEE FLOOR PLAN P2.21 FOR CONTINUATION.
6. PROVIDE OFD WITH DOWNSPOUT NOZZLE AND SPILL TO GRADE.
7. PROVIDE WITH HIGH-LOW COMBUSTION AIR SUPPLY PER UPC.
8. 3/4" HWR FROM 2ND FLOOR.
9. 3/4" CD FROM ACU1-1, DRAIN TO FIXED AIR GAP FITTING.
10. FIXED AIR GAP FITTING SHALL BE ZURN Z-1024 WITH 1" INLET & 1-1/2" OUTLET INSTALL BELOW ACU1-1.
11. 3'-3"x3'-3" HOUSEKEEPING PAD

APPROVAL STAMP
IDENTIFICATION STAMP
DIVISION OF THE STATE ARCHITECT
APP'D - 107417
AC FLS TH SS
DATE: 12/21/05

NO.	ISSUED FOR	DATE
1	DSA APPROVAL SET	12/08/05

GEORGE L. ABELAND No. M29691 Exp. 06-30-06 MECHANICAL REGISTERED PROFESSIONAL ENGINEER STATE OF CALIFORNIA

Date Signed 12/06/05
CERTIFIED BY

K M D
KAPLAN McLAUGHLIN DIAZ
ARCHITECTURE PLANNING
222 VALLEJO SAN FRANCISCO, CA 94111
(415) 398-5191 FAX (415) 394-7158

ALFATECH
120 MONTGOMERY STREET, SUITE 715 415-403-5000
SAN FRANCISCO, CALIFORNIA 94104 FAX: 415-788-8040
SAN JOSE • NEW JERSEY • SINGAPORE • AUSTRALIA
All Project No. 204231

SOLANO COMMUNITY COLLEGE

SCCD
VALLEJO CENTER
Contract # A003.6123.01.V1

PROJECT NO.	DATE
419-201	12-08-05

ENLARGED
PLUMBING PLANS
AS BUILTS

P3.01

PLOT DATE:

COPYRIGHT © 2004 BY KMD (KAPLAN McLAUGHLIN DIAZ). ALL RIGHTS RESERVED.

PUMP SCHEDULE

MARK	MFR/ MODEL	SERVICE	GPM	HEAD (FT)	MOTOR HP	V	PH	WT. LBS.	REMARKS
CP-1	B & G/ MODEL SLC-30B	WH-1	5	10	1/5	115	1	10	ALL BRONZE CONSTRUCTION, UL APPROVED

PLUMBING FIXTURE SCHEDULE

FIXTURE TAG	DESCRIPTION	TRAP	CONNECTION SIZES				REMARKS
			WASTE	VENT	CW	HW	
WC-1	WATER CLOSET	INT.	4"	2"	1 1/4"	–	AMERICAN STANDARD 2257.103 AFWALL AQUAMETER VITREOUS CHINA TOILET, ELONGATED, WALL MOUNTED, 1.6GAL. FLUSH; BEMIS 1955SS/C SOLID PLASTIC WITH OPEN FRONT LESS COVER; ZURN Z-1203 & Z-1204 SERIES CARRIER SYSTEM; SLOAN ROYAL III FLUSH VALVE.
WC-2	WATER CLOSET (ADA COMPLIANT)	INT.	4'	2"	1 1/4"	–	SAME AS WC-1 EXCEPT MOUNT ACCORDING TO ADA REQUIREMENT. (15" TOILET SEAT HEIGHT IN STUDENT TOILET RMS) FLUSH VALVE TO SHOW FLUSH LEVER TO BE ON WIDE SIDE.
UR-1	URINAL	INT.	2"	1 1/2"	1"	–	AMERICAN STANDARD: 6541.132 "ALLBROOK" VITREOUS CHINA SIPHON JET W/ TOP SPUD. PROVIDE SLOAN OPTIMA PLUS 8180-1.0MC - (BATTERY POWERED FLUSH VALVE. CHROME PLATED ANGLE STOP AND SUPPLY. 1
UR-2	URINAL (ADA ACCESSIBLE)	INT.	2"	1 1/2"	1"	–	SAME AS UR-1 EXCEPT MOUNT ACCORDING TO ADA REQUIREMENTS.
LAV-1	LAVATORY (ADA ACCESSIBLE)	1 1/2"	2"	1 1/2"	1/2"	1/2"	AMERICAN STANDARD MODEL 0475.047 AQUALYN COUNTERTOP LAVATORY, VITREOUS CHINA, FRONT OVERFLOW, SINGLE HOLE. FAUCET: SENSORFLO MODEL; SB700 BATTERY POWERED LAVATORY FAUCET, .5 GPM VANDAL-RESISTANT FLOW CONTROL; ADD TMV OPTION. ← SEE RFI-291 SINGLE BASIN LOW PROFILE FAUCET. POLISHED CHROME PLATED, TWO 3-VOLT DC LITHIUM BATTERIES 17 GAUGE P-TRAP CHROME PLATED, TUBING TO WALL WITH ESCUTCHEON. INSULATE PIPING UNDER COUNTER WITH SKAL+GARD MODEL No. SG-100B; MOUNT FRONT RIM HEIGHT AT 34" FROM FINISHED FLOOR. DRAIN: AMERICAN STANDARD 2411.015 GRID DRAIN.
LAV-2	LAVATORY (ADA ACCESSIBLE)	1 1/2"	2"	1 1/2"	1/2"	1/2"	AMERICAN STANDARD 0355.0.12 LUCERNE MODEL WALL HUNG LAVATORY, VITREOUS CHINA, FRONT OVERFLOW, FAUCET LEDGE; AMERICAN STANDARD RELIANT MODEL 2385.403 SINGLE CONTROL LAVATORY FAUCET W/METAL GRID STRAINER, 0.5GPM; 17 GAUGE P-TRAP CHROME PLATED, TUBING TO WALL W/ESCUTCHEON; ZURN MODEL Z-123 CONCEALED ARM SYSTEM WALL LAVATORY CARRIER. INSULATE WASTE AND HOT WATER PIPING W/SKAL+GARD MODEL #SG-100B. MOUNT FRONT RIM HEIGHT AT 34" FROM FINISH FLOOR.
SK-1	SINK (ADA ACCESSIBLE)	1 1/2"	2"	1 1/2"	1/2"	1/2"	SEE LAB DWGS.
SK-2	SINK (ADA ACCESSIBLE)	1 1/2"	2"	1 1/2"	1/2"	1/2"	ELKAY MODEL LRAD-1716, 17"LENGTHx16"WIDTHx6-1/2"DEPTH, SINGLE BOWL, 18 GAUGE, TYPE 304 STAINLESS STEEL, THREE FAUCET HOLES; ZURN Z-871C4 KITCHEN SINK FAUCET; 17 GAUGE P-TRAP CHROME PLATED, TUBING TO WALL WITH ESCUTCHEON. PROVIDE CW WITH DOUBLE STOP VALVE.
SK-3	SINK	1 1/2"	2"	1 1/2"	1/2"	1/2"	ELKAY MODEL LRAD3319, 33"LENGHTx19-1/2"WIDTHx6-1/2"DEPTH, DOUBLE BOWL, 18-GAUGE TYPE 304 STAINLESS STEEL, 4 FAUCET HOLES; CHICAGO MODEL 200-A317 KITCHEN SINK FAUCETS, 4" WRISTBLADE HANDLE, DECK MOUNTED FITTING WITH SPRAY, 2.2 GPM; P-TRAP; STRAINER; IN-SINK-ERATOR BADGER 5 GARBAGE DISPOSER, 1/2 HP, 120 VOLT .
SK-4	SCIENCE LAB SINK (ADA ACCESSIBLE)	1 1/2"	2"	1 1/2"	1/2"	–	SEE LAB DWGS.
SK-5	SINK	1 1/2"	3"	2"	1/2"	1/2"	JUST CUSTOM SINK, OR EQUAL; 45"x22" O.D. AND 42"x16" I.D. (LEFT-TO-RIGHTx FRONT -TO-BACK), 9" DEEP 18 GAUGE S.S., TYPE 304; SINGLE BOWL LEDGE BACK. GRIP RIM PLUS SELFRIMMING, DROP-IN BOWL, DRAIN AT CENTER, 2-FAUCET MOUNTING AT BACK END; CHICAGO 201-AGN8AE2805-5 FAUCET, DECK MOUNTED WITH RIGID/SWING GOOSE NECK SPOUT, 369 LEVER HANDLE; ZURN Z1180 SOLID INTERCEPTOR, OR EQUAL.
SK-5A	SINK (ADA ACCESSIBLE)	1 1/2"	3"	2"	1/2"	1/2"	SAME AS SK-5 EXCEPT 6-1/2" DEEP BOWL.
SS-1	SERVICE SINK	3"	3"	2	3/4"	3/4"	KOHLER MODEL K-6710 WHITBY CORNER SERVICE SINK, ENAMELED CAST IRON, 3" STRAINER; KOHLER MODEL K-8928 SINK FAUCET, BRASS CONSTRUCTION, LEVER HANDLES, WALL HOOK, RUBBER HOSE. PROVIDE BACKING IN WALL FOR WALL HOOK/FAUCET STEM SUPPORT. USE FLORESTONE MODEL 20 IN ROOM A-206 PER REPLY TO RFI-265
HB-1	HOSE BIBB	–	–	–	1/2"	–	ACORN: 8121 HOSE BIBB WITH VACUUM BREAKER LOOSE KEY. MOUNT AT 18" ABOVE FINISHED FLOOR OR GRADE.
HB-2	HOSE BIBB	–	–	–	3/4"	–	MIFAB MODEL MHY-95, ANTI-CONTAMINATION WALL FAUCET WITH FLUSH-MOUNTED WALL BOX AND ANTI-SIPHON VACUUM BREAKER.
DF-1	DRINKING FOUNTAIN (ADA ACCESSIBLE, INDOOR)	1-1/4"	1-1/4"	1-1/4"	1/2"	–	HAWS MODEL 1119 WALL MOUNTED DRINKING FOUNTAIN, DUAL HEIGHT, STAINLESS STEEL; HAWS MODEL 6700.4 MOUNTING PLATE; HAWS MODEL 6800 SUPPORT CARRIER. INDOOR UNIT.
FD-1	FLOOR DRAIN	2"	2"	2"	–	–	ZURN ZN-415-B FLOOR DRAIN WITH POLISHED NICKEL BRONZE TOP AND TRAP PRIMER WHERE INDICATED.
FS-1	FLOOR SINK	2"	2"	2"	–	–	ZURN Z-1910 RECEPTOR, ACID RESISTANT ENAMELLED CAST IRON, FLASHING FLANGE, DOME STRAINER, PARTIAL GRATE FOR DISCHARGE PIPING, AND TRAP PRIMER WHERE INDICATED.
SH-1	SHOWER (ADA ACCESSIBLE)	–	–	–	1/2"	1/2"	SYMMONS "TEMPTROL" S-SERIES WITH MIXING VALVE FOR HOT & COLD WATER, IN-LINE DIVERTER FROM SHOWER HEAD TO FLEXIBLE HOSE, HANDHELD SHOWER SPRAY (2.5 GPM).
EW-1	EYE WASH (ADA ACCESSIBLE)	–	–	–	1/2"	–	SEE LAB DWGS.
ESS-1	EMERGENCY SHOWER STATION (ADA ACCESSIBLE)	–	1-1/4"	–	1-1/4"	–	SEE LAB DWGS.
RD-1	ROOF DRAIN	–	–	–	–	–	ZURN Z-100-IC DURA-COATED CAST IRON BODY WITH COMBINATION MEMBRANE FLASHING CLAMP GRAVEL GUARD AND LOW SILHOUTTE POLYDROME
OFD-1	OVERFLOW DRAIN	–	–	–	–	–	ZURN Z-100-IC DURA-COATED CAST IRON BODY WITH COMBINATION MEMBRANE FLASHING CLAMP GRAVEL GUARD AND LOW SILHOUTTE POLYDOME. PROVIDE OVERFLOW DRAIN WITH 2" WATER DAM COLLAR
FCO	FLOOR CLEANOUT	–	–	–	–	–	ZURN ZN-1400 FLOOR CLEANOUT, DURA COATED CAST IRON BODY WITH GAS AND WATERTIGHT ABS TAPERED THREAM PLUG AND ROUND POLISHED NICKEL BRONZE SCORIEATED TOP.
WCO	WALL CLEANOUT	–	–	–	–	–	ZURN-1468 ROUND STAINLESS STEEL WALL ACCESS COVER COMPLETE WITH SECURING SCREW AND BRONZE RAISED HEX HEAD PLUG. PROVIDE WALL STRAPS OR BACKING FOR SECURE MOUNTING. COVER TO FIT TIGHT TO WALL.
TP-1	TRAP PRIMER	–	–	–	1/2	–	SLOAN F-72-A1 OR PRECISION PLUMBING PRODUCTS MODEL P-2 WITH DISTRIBUTION UNIT. PROVIDE SUPPLY LINE WITH SOV. PROVIDE ACCESS PANEL, AP-1.
AP-1	ACCESS PANEL	–	–	–	–	–	KARP 12x12 PRIMER COATED SEEL DSC-214MP WITH CONCEALED CONTINUOUS PIANO HINGE, SCREW DRIVER OPERATED WITH STAINLESS STEEL CAM PAINT TO MATCH WALL FINISH.
AT	ACID NEUTRALIZATION TANK	3"	3"	2"	–	–	UNDERCOUNTER ACID NEUTRALIZER, MODEL ORION 15 GALLON, 15.5 HEIGHT, 17.25 DIA.
RF-1	ROOF RECEPTOR	–	4"	–	–	–	SMITH 3980 ROOF-CEPTOR, 12 1/2" TOP-MEDIUM DEPTH RECEPTOR DRAIN; 4" OUTLET SIZE.

DOMESTIC WATER HEATER SCHEDULE

MARK	MFR./ MODEL	SERVICE	GPH (RECOVERY RATE)	INPUT (MBH)	STORAGE GALLONS	TEMP. RISE (°F)	FLUE DIA. (IN.)	EXPANSION TANK (GALLONS)	ELECTRICAL	REMARKS	MIN. DISTANCE TO COMBUSTIBLE CONSTRUCTION	OPERATING WEIGHT LBS
WH-1	RHEEM RCD250-100-1	BLDG. 'A'	303	250	100	80	6	12	120V	GAS FIRED, GLASS LINED, FULLY AUTOMATIC 120 VOLT CONTROL, WITH INTERMITTENT SPARK IGNITION, UL APPROVED, R-16 FOAM INSULATION	1" TO SIDE & REAR 12" TO CEILING	1200
WH-2	RHEEM RCD156-82-1	BLDG. 'B'	189	156	82	80	6	12	120V	GAS FIRED, GLASS LINED, FULLY AUTOMATIC 120 VOLT CONTROL, WITH INTERMITTENT SPARK IGNITION, UL APPROVED, R-16 FOAM INSULATION	1" TO SIDE & REAR 12" TO CEILING	800

NOTE: SEE DETAIL 2/P6.02 FOR INSTALLATION DETAIL.

APPROVAL STAMP
IDENTIFICATION STAMP
DIVISION OF THE STATE ARCHITECT
APP. NO.- 107417
AC: FLS TH SS MK
DATE: 12/21/05

NO.	ISSUED FOR	DATE
1	DSA APPROVAL SET	12/08/05

REGISTERED PROFESSIONAL ENGINEER GEORGE L. ARELLANO No. M29691 Exp. 06-30-06 MECHANICAL STATE OF CALIFORNIA
Date Signed 12/06/05
CERTIFIED BY

K M D
KAPLAN McLAUGHLIN DIAZ
ARCHITECTURE PLANNING
222 VALLEJO SAN FRANCISCO, CA 94111
(415) 398-5191 FAX (415) 394-7158

ALFATECH
120 MONTGOMERY STREET, SUITE 715 415-403-3000
SAN FRANCISCO, CALIFORNIA 94104 FAX: 415-788-8040
SAN JOSE • NEW JERSEY • SINGAPORE • AUSTRALIA
AT Project No. 20431

SOLANO COMMUNITY COLLEGE

SCCD
VALLEJO CENTER
Contract # A003.6123.01.V1

PROJECT NO. 419-201
DATE 12-08-05

PLUMBING SCHEDULES
AS BUILTS

P4.01

PLOT DATE:

COPYRIGHT © 2004 BY KMD (KAPLAN McLAUGHLIN DIAZ). ALL RIGHTS RESERVED.

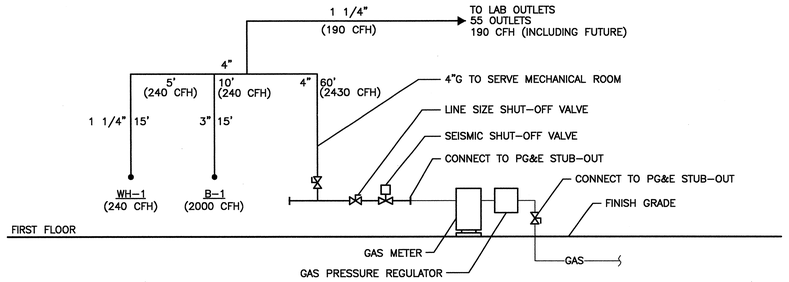

NATURAL GAS PIPING DIAGRAM (NTS) (7)

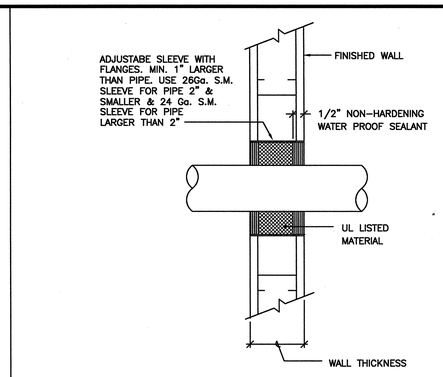

SYSTEM No. WL1003

NOTES:

① STEEL SLEEVE – CYLINDRICAL SLEEVE FABRICATED FROM MIN 0.019" THICK (No28 GAUGE) GALV SHEET STEEL AND HAVING A MIN. 2" LAP ALONG THE LONGITTUDIAL SEAM. LENGHT OF STEEL SLEEVE TO BE EQUAL TO THICKNESS OF WALL PLUS 1" TO 4" SUCH THAT, WHEN INSTALLED, THE ENDS OF THE SLEEVE WILL PROJECT APPROX 1/2" TO 2" BEYOND THE SURFACE OF THE WALL ON BOTH SIDES OF THE WALL ASSEMBLY.

② PACKING MATERIAL – MIN 1" THICKNESS OF MINERAL-WOOL BATT INSULATION FIRMLY PACKED INTO STEEL SLEEVE ON BOTH SIDES OF THE WALL ASSEMBLY AS PERMANENT FORMS. PACKING MATERIAL TO BE RECESSED MIN. 1/2" FROM END OF STEEL SLEEVE (FLUSH WITH OR RECESSED INTO GYPSUM WALLBOARD SURFACE) ON BOTH SIDES OF WALL ASSEMBLY.

TYPICAL WALL PENETRATION DETAIL (BARE PIPE) (4)

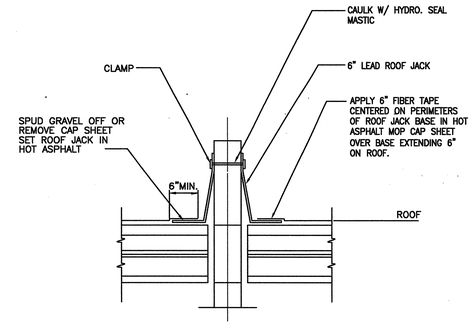

TYPICAL PIPE/VENT THRU ROOF DETAIL (1)

PIPE SIZE (IN)	MAX SUPPORT SPAN (FT)	MIN. ROD SIZE (IN)
UP TO 1"	7	3/8"
1-1/2"	9	3/8"
2 TO 2-1/2"	10	3/8"
3"	12	1/2"
3-1/2"	13	1/2"
4	14	5/8"
5	16	5/8"
6	17	3/4"

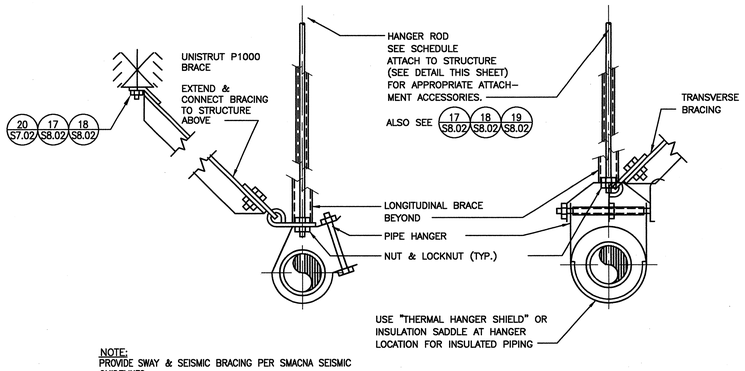

NOTE:
PROVIDE SWAY & SEISMIC BRACING PER SMACNA SEISMIC GUIDELINES.
SPACE BRACES AT EVERY OTHER ROD SUPPORT.

TYPICAL PIPE HANGERS DETAIL (8)

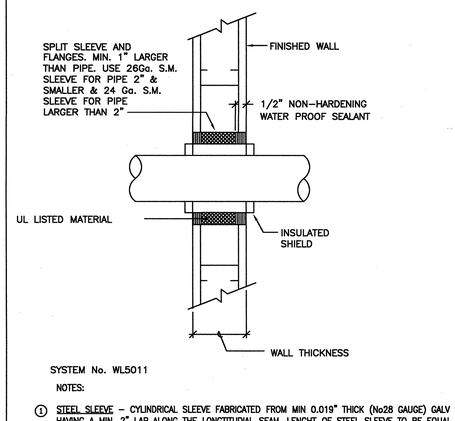

SYSTEM No. WL5011

NOTES:

① STEEL SLEEVE – CYLINDRICAL SLEEVE FABRICATED FROM MIN 0.019" THICK (No28 GAUGE) GALV SHEET STEEL AND HAVING A MIN. 2" LAP ALONG THE LONGTITUDIAL SEAM. LENGHT OF STEEL SLEEVE TO BE EQUAL TO THICKNESS OF WALL PLUS 1" SUCH THAT, WHEN INSTALLED, THE ENDS OF THE SLEEVE WILL PROJECT APPROX 1/2" BEYOND THE SURFACE OF THE WALL ON BOTH SIDES OF THE WALL ASSEMBLY.

② PACKING MATERIAL – POLYETHYLENE BACKER ROD OR MIN 1"THICKNESS OF MINERAL-WOOL BATT INSULATION FIRMLY PACKED INTO SLEEVE ON BOTH SIDES OF THE WALL ASSEMBLY AS PERMANENT FORMS. PACKING MATERIAL TO BE RECESSED MIN. 1" FROM END OF STEEL SLEEVE (RECESSED MIN. 1/2" INTO GYPSUM WALLBOARD SURFACE) ON BOTH SIDES OF WALL ASSEMBLY.

TYPICAL PIPE WALL PENETRATION DETAIL (INSULATED PIPE) (5)

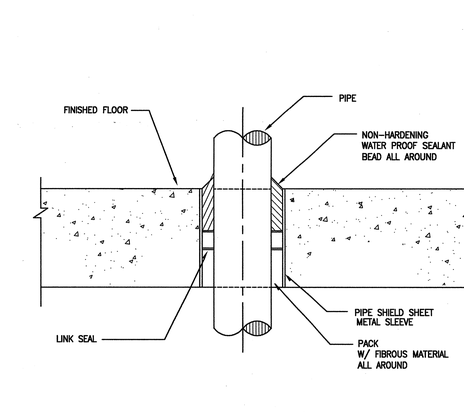

TYPICAL PIPE PENETRATION THRU FLOOR SLAB ON GRADE DETAIL (2)

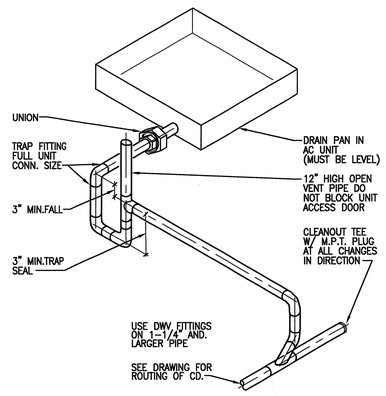

CONDENSATE DRAIN (—)

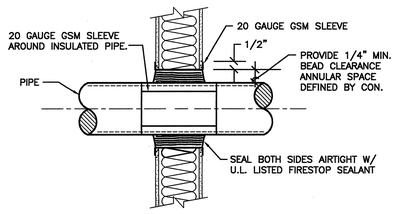

NOTE:
1. PIPE MUST "FLOAT" IN OPENING AND NOT HAVE CONTACT WITH PARTITION.
2. ASSEMBLY SHALL MEET UL SYSTEM CAJ 1001 FOR CONC. OR CMU WALLS AND UL SYSTEM WL 1001 FOR 1 & 2 HR STUD WALLS AND UL WL 5032 FOR INSULATED PIPE AT 1 & 2 HR STUD WALLS.

TYPICAL PIPE THRU RATED PARTITION OR WALL (9)

NOT USED (6)

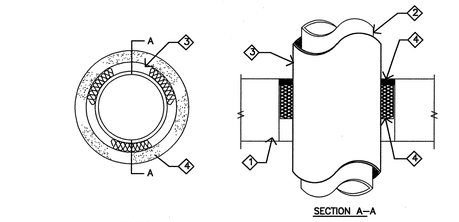

NOTES:
1. FLOOR ASSEMBLY.
2. PIPE.
3. FIRESTOP SYSTEM PER ASTME814/UL1479.
4. PENETRATION OPENING PER ANNULAR SPACE REQUIREMENTS FOR SELECTED SYSTEM.

TYPICAL PIPE PENETRATION THRU FLOOR DETAIL (3)

APPROVAL STAMP
IDENTIFICATION STAMP
DIVISION OF THE STATE ARCHITECT
APP/INC- 107417
AC FLS TH SS
DATE: 12/21/05

NO.	ISSUED FOR	DATE
1	DSA APPROVAL SET	12/08/05

CERTIFIED BY
Date Signed 12/06/05

KAPLAN McLAUGHLIN DIAZ
ARCHITECTURE PLANNING
222 VALLEJO SAN FRANCISCO, CA 94111
(415) 398-5191 FAX (415) 394-7158

ALFATECH
120 MONTGOMERY STREET, SUITE 715 415-403-3000
SAN FRANCISCO, CALIFORNIA 94104 FAX: 415-788-6040
SAN JOSE • NEW JERSEY • SINGAPORE • AUSTRALIA
ATProject No. 20431

SOLANO COMMUNITY COLLEGE

SCCD
VALLEJO CENTER
Contract # A003.6123.01.V1

PROJECT NO. 419-201
DATE 12-08-05

PLUMBING DETAILS
AS BUILTS

P6.01

PLOT DATE:

COPYRIGHT © 2004 BY KMD (KAPLAN McLAUGHLIN DIAZ). ALL RIGHTS RESERVED.

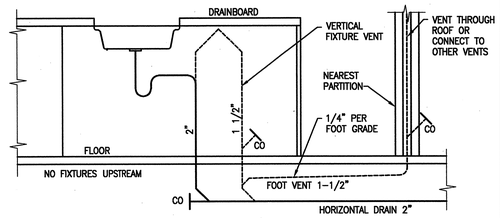

NOTE:

DRAINAGE FITTINGS SHALL BE USED ON ALL PARTS OF THE VENT BELOW THE FLOOR LINE.

ISLAND VENTING DETAIL (10)

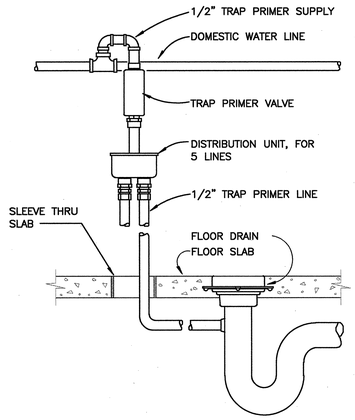

TRAP SEAL PRIMER DETAIL (7)

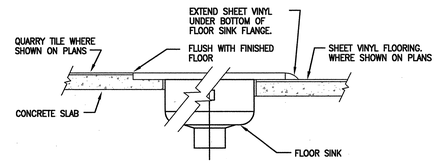

FLOOR SINK DETAIL (4)

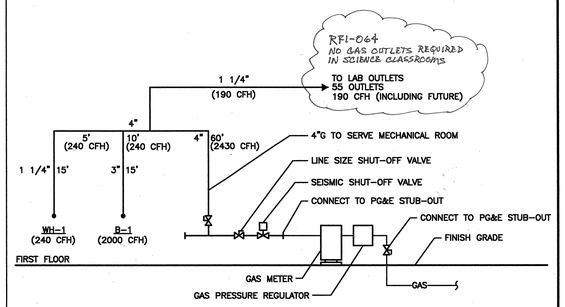

GAS PIPING DIAGRAM (1)

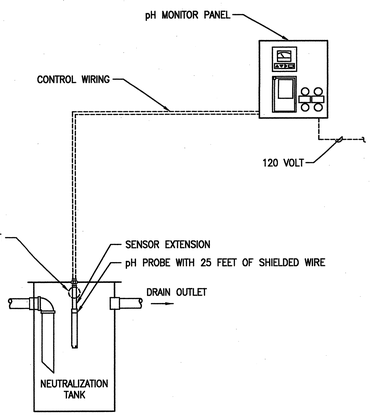

NOTE:
FILL TANK WITH LIMESTONE CHIPS (50 LBS. RECOMMENDED)

NEUTRALIZING TANK pH MONITORING DETAIL (11)

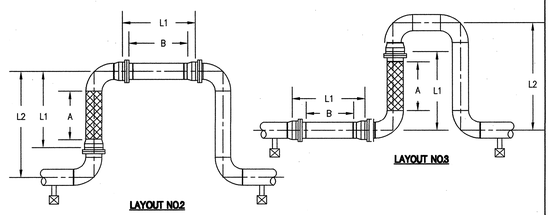

IN-LINE ARRANGEMENT

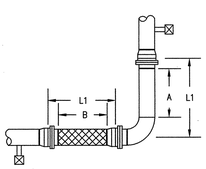

LAYOUT NO.1

CORNER ARRANGEMENT

SCHEDULE FOR PIPING CROSSING SEISMIC JOINT WITH 4" MOVEMENT

PIPE SIZE	MILMAC MODEL NUMBER	"L" DIMENSION
4"	BB 31533-64-II (3 REQUIRED PER LINE)	17"
3"	BB 31533-48-II (3 REQUIRED PER LINE)	21"
2"	BB 32006-32-24/FDA (3 REQUIRED PER LINE)	15"
1-1/2"	BB 32006-24-24/FDA	12"
1"	BB 32006-16-24/FDA	12"
3/4"	BB 32006-12-24/FDA	12"

SEISMIC JOINT WITH 4" MOVEMENT DETAIL (8)

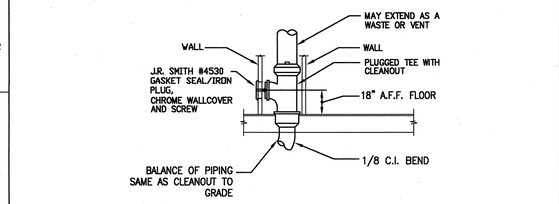

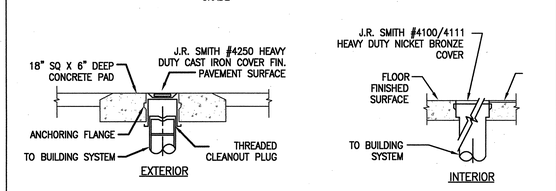

CLEANOUTS DETAIL (5)

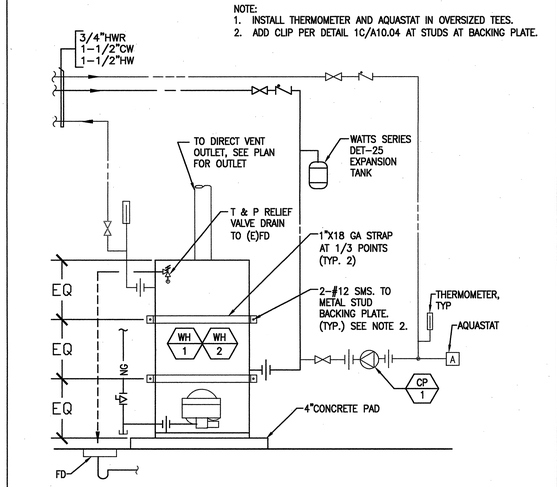

WATER HEATER DETAIL (2)

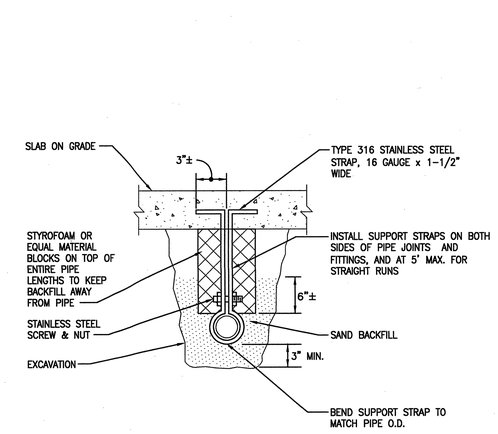

SUPPORT FOR PIPING BELOW SLAB ON GRADE (12)

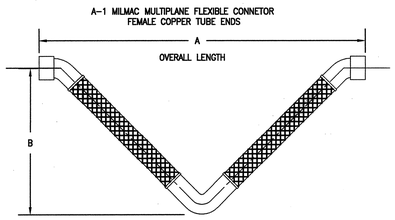

HOSE – BRONZE
BRAID – BRONZE
90° & 45° – FEMALE COPPER SWEAT

SCHEDULE FOR PIPING CROSSING SEISMIC JOINT WITH 4" MOVEMENT

PIPE SIZE	MILMAC MODEL NUMBER	DIMENSION "A"	DIMENSION "B"
6"	V 206.0-4	69-5/8"	33-7/8"
4"	V 204.0-4	53-5/8"	26-1/4"
3"	V 203.0-4	46-7/8"	23"
2"	V 202.0-4	38-3/8"	18-3/4"
1-1/2"	V 51.5-4	34-1/2"	16-3/8"
1"	V 51.25-4	31-1/8"	14-3/4
3/4"	V 51.75-4	28-1/2"	13-5/8"

SEISMIC JOINT WITH 4" MOVEMENT DETAIL (9)

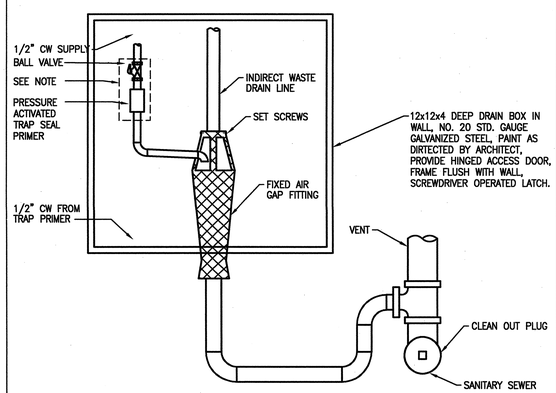

NOTE:
LOCATE BALL VALVE AND TRAP PRIMER IN ACCESSIBLE CEILING WHERE POSSIBLE.

INDIRECT DRAIN WITH DRAIN BOX (6)

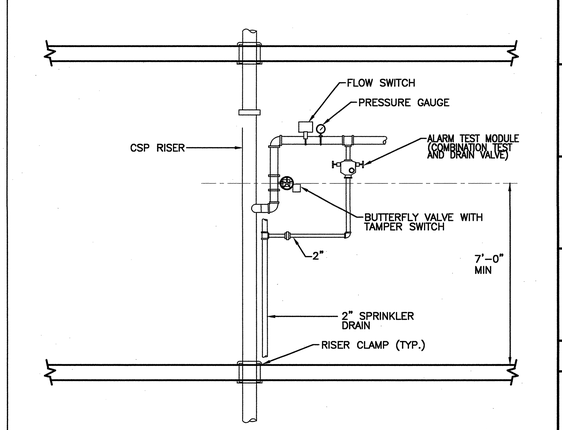

TYPICAL SPRINKLER CONTROL VALVE ASSEMBLY DETAIL (3)

APPROVAL STAMP — IDENTIFICATION STAMP
DIVISION OF THE STATE ARCHITECT
APP'D 02- 107417
AS NOTED FLS TH SS ML
DATE: 12/2/05

NO.	ISSUED FOR	DATE
1	DSA APPROVAL SET	12/08/05

REGISTERED PROFESSIONAL ENGINEER — GEORGE L. ARELLANO — No. M29691 — exp. 06-30-06 — Mechanical — STATE OF CALIFORNIA

Date Signed 12/06/05
CERTIFIED BY

K M D
KAPLAN McLAUGHLIN DIAZ
ARCHITECTURE PLANNING
222 VALLEJO SAN FRANCISCO, CA 94111
(415) 398-5191 FAX (415) 394-7158

ALFATECH
120 MONTGOMERY STREET, SUITE 715 415-403-3000
SAN FRANCISCO, CALIFORNIA 94104 FAX: 415-788-8040
SAN JOSE • NEW JERSEY • SINGAPORE • AUSTRALIA
AT Project No. 39431

SOLANO COMMUNITY COLLEGE

SCCD
VALLEJO CENTER
Contract # A003.6123.01.V1

PROJECT NO.	DATE
419-201	12-08-05

PLUMBING DETAILS

AS BUILTS

P6.02

PLOT DATE:

COPYRIGHT © 2004 BY KMD (KAPLAN McLAUGHLIN DIAZ). ALL RIGHTS RESERVED.

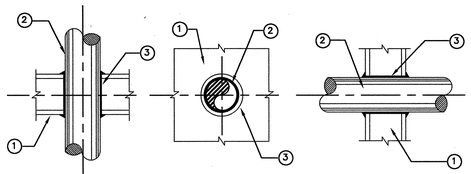

PACK SPACE BETWEEN PIPING AND PENETRATION OPENING WITH MATERIAL APPROVED BY UNDERWRITERS LABORATORIES FOR THROUGH PENETRATION FIRE STOP SYSTEMS. MATERIALS, METHODS, AND INSTALLATION SHALL BE IN ACCORDANCE WITH UL APPROVED LISTING AND SHALL BE DESIGNED TO ACT AS A FIRESTOP AS WELL AS A COLD SMOKE, NOXIOUS GAS AND WATER SEALANT. SUBMIT LISTING NUMBERS AND DETAILS FROM UL FIRE RESISTANT DIRECTORY FOR ALL SUCH SYSTEMS TO BE USED. INSULATE PIPES 3 FEET TO EITHER SIDE OF PENETRATION WITH MATERIAL SPECIFIED IN THE UL FIRE RESISTANCE DIRECTORY IF REQUIRED TO OBTAIN THE T- AND F- RATINGS.

(1) WALL AND FLOOR

(2) PIPE OR INSULATED PIPE

(3) FIRE BARRIER – "3M PRODUCTS INC." FIRE BARRIER CAULK CP25 WB+, CP 25WB, CP 25 N/S AND S/L, FIRE BARRIER 2000+, 2000 AND 2003 SILICONE SEALANTS, MOLDABLE PUTTY.

USE FOLLOWING APPLICABLE UL SYSTEMS FOR THE CONSTRUCTION TYPES LISTED.

CONSTRUCTION TYPE	THROUGH PENETRATION FIRESTOP SYSTEM NUMBERS
CONCRETE FLOORS	CAJ1007 (F-2, 3, 4 HR; T-0 HR), CAJ1010 (F-2 HR; T-0 HR), CAJ1012 (F-1 HR; T-0 HR), CAJ1017 (F-2, 3 HR; T-0 HR), CAJ1021 (F-3 HR; T-0, 1.5 HR), CAJ1027 (F-3 HR; T-0 HR), CAJ1044 (F-2, 3, 4 HR; T-0 HR), CAJ1058 (F-3 HR; T-3 HR), CAJ1063 (F-3 HR; T-0.5 HR), CAJ1112 (F-2 HR; T-0 HR), CAJ1175 (F-2 HR; T-0 HR), CAJ5001 (F-1.5, 2, 3 HR; T-0, 0.5, 0.75, 1 HR), CAJ5002 (F-2, 3 HR; T-0, 0.5, 1 HR), CAJ5003 (F-2 HR; T-0.5, 1 HR), CAJ5024 (F-2, 3 HR; T-1, 1.5 HR), CAJ5060 (F-2, 3 HR; T-0, 0.75, 1, 1.5 HR), CBJ1020 (F-4 HR; T-0, 0.75, 1.5 HR)
CONCRETE OR MASONRY WALLS	CAJ1001 (F-3 HR; T-0 HR), CAJ1017 (F-2, 3 HR; T-0 HR), CAJ1021 (F-3 HR; T-0, 1.5 HR), CAJ1027 (F-3 HR; T-0 HR), CAJ1044 (F-2, 3, 4 HR; T-0 HR), CAJ1058 (F-3 HR; T-0 HR), CAJ1063 (F-3 HR; T-0.5 HR), CAJ1112 (F-2 HR; T-0 HR), CAJ1175 (F-2 HR; T-0 HR), CAJ5001 (F-1.5, 2, 3 HR; T-0, 0.5, 0.75, 1 HR), CAJ5002 (F-2, 3 HR; T-0, 0.5, 1 HR), CAJ5003 (F-2 HR; T-0.5, 1 HR), CAJ5024 (F-2, 3 HR; T-1, 1.5 HR), CAJ5060 (F-2, 3 HR; T-0, 0.75, 1, 1.5 HR), CBJ1020 (F-4 HR; T-0, 0.75, 1.5 HR)
GYPSUM WALLBOARD/ STUD WALLS	WL1001 (F-1, 2, 3, 4 HR; T-0, 1, 2, 3, 4 HR), WL1002 (F-1, 2 HR; T-0 HR), WL1003 (F-1, 2 HR; T-0 HR), WL2002 (F-1, 1.5, 2 HR, T-0.75, 1, 1.5, 2 HR), WL2003 (F-1, 2 HR; T-1, 2 HR), WL2004 (F-2 HR; T-0.75, 1.5, 2 HR), WL2005 (F-1, 2 HR; T-0, 0.75, 1, 1.5, 2 HR), WL5001 (F-1, 2 HR; T-1, 1.5 HR), WL5002 (F-1, 2 HR; T-1, 2 HR)

PIPE PENETRATION THRU FIRE RATED BARRIER DETAIL

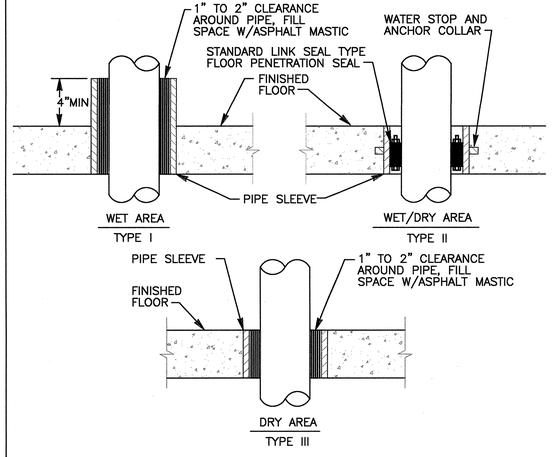

TYPICAL MEMBRANE WATERPROOF FLOOR PENETRATION

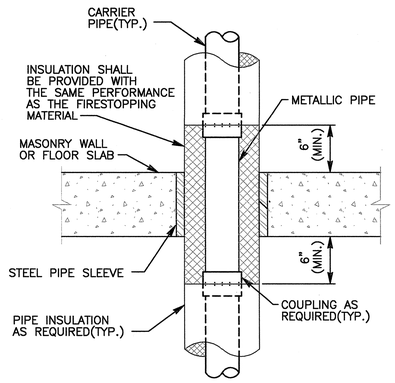

NOTE: PIPE SLEEVE SHALL BE SIZED TO PROVIDE 1/4" ALL AROUND CLEARANCE.

INSULATED OR NON-INSULATED, ABOVE GRADE
N.T.S.

TYPICAL CONCRETE FLOOR OR MASONRY WALL PENETRATION

VALLEJO COMMUNITY COLLEGE
VALLEJO CENTER

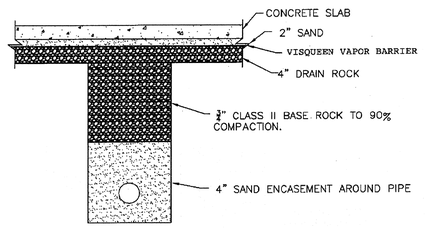

RFI-030

UNDERSLAB TRENCH DETAIL

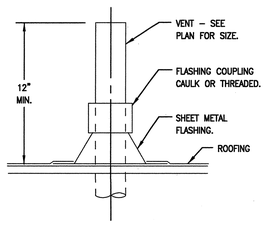

VENT THRU ROOF DETAIL

APPROVAL STAMP
IDENTIFICATION STAMP
DIVISION OF THE STATE ARCHITECT
APP'D: 107417
ACK'D FLS TH SS MC
DATE: 12/2/05

NO.	ISSUED FOR	DATE
1	DSA APPROVAL SET	12/08/05

GEORGE L. ARELLANO No. M29691 Exp. 06-30-07 Registered Professional Engineer STATE OF CALIFORNIA
Date Signed 12/06/05
CERTIFIED BY

K M D
KAPLAN McLAUGHLIN DIAZ
ARCHITECTURE PLANNING
222 VALLEJO SAN FRANCISCO, CA 94111
(415) 398-5191 FAX (415) 394-7158

ALFATECH
120 MONTGOMERY STREET, SUITE 715 415-403-5000
SAN FRANCISCO, CALIFORNIA 94104 FAX 415-738-5000
SAN JOSE • NEW JERSEY • SINGAPORE • AUSTRALIA

SOLANO COMMUNITY COLLEGE

SCCD
VALLEJO CENTER
Contract # A003.6123.01.V1

PROJECT NO. 419-201
DATE 12-08-05

PLUMBING DETAILS

AS BUILTS

P6.03

PLOT DATE:

COPYRIGHT © 2004 BY KMD (KAPLAN McLAUGHLIN DIAZ). ALL RIGHTS RESERVED.

PATH: G:\000\000-000\ACAD\SHEETS\

LEGEND

ROOM NAME — LAB

ROOM NUMBER — 2034

GAS CYLANDER RACK

SECTION SYMBOL — 1 / QL4.01

ELEVATION SYMBOL — QL3.01 / 1

FLOOR STANDING EQUIPMENT ZONE — EQUIP. ZONE

ALL ELECTRICAL IS SHOWN FOR CO-ORDINATION BETWEEN TRADES. SEE ELECTRICAL DRAWINGS.

120V POWER

208V POWER

DATA

ONE OUTLET WITH EMERGENCY POWER — EP

SURFACE MOUNTED RACEWAY

BENCH (B) - DOUBLE RACEWAY MOUNTED AT 42" AFF TOP: DATA @ 96" OC BOTTOM: REGULAR CIRCUIT 120V @ 24" OC — SMR B

ALL PLUMBING IS SHOWN FOR CO-ORDINATION BETWEEN TRADES. SEE PLUMBING DRAWINGS.

EMERGENCY SHOWER/EYEWASH

FLOOR DRAIN — FD

FLOOR SINK — FS

ALL MECHANICAL IS SHOWN FOR CO-ORDINATION BETWEEN TRADES. SEE MECHANICAL DRAWINGS.

EXHAUST

BENCH SYMBOLS

CASWORK TYPE - SEE SCHEDULE — KCSD, SINK

LINE OF CASEWORK UNDER WORKSURFACE

SHELVES

PEGBOARD SEE CASEWORK SCHEDULE

CHEMICAL FUME HOOD

ABBREVIATIONS

&	And
L	Angle
@	At
℄	Centerline
ϕ	Diameter or Round
#	Pound or Number
A.	Compressed Air
A/C	Air Conditioning
ADJ.	Adjustable
A.F.F.	Above Finished Floor
ALT.	Alternate
ALUM.	Aluminum
APPROX.	Approximate
Ar	Argon
ARCH.	Architectural
ASP.	Aspirator
BD.	Board
BLK.	Black
BLKG.	Blocking
B.S.C.	Biosafety Cabinet
CAB.	Cabinet
CENTR.	Centrifuge
C.F.	Cubic Foot
C.F.C.I.	Contractor Furnished/ Contractor Installed
C.F.H.	Chemical Fume Hood
C.G.	Corner Guard
CHEM.	Chemical
CLG.	Ceiling
CH.W.R.	Chilled Water Return
CH.W.S.	Chilled Water Supply
CLR.	Clear
CNTR.	Counter
CO2	Carbon Dioxide
CONT.	Continuous
C.P.	Control Panel
C.S.	Cup Sink
CTR.	Center
C.W.	Cold Water
C.W.A.	Cold Water with Aspirator
CYL.	Cylinder
DBL.	Double
DEMO.	Demolish
DET.	Detail
D.I.	Deionized Water/High Purity Water
DIM.	Dimension
DISP.	Dispenser
DIV.	Division
DN.	Down
DR.	Drawer
D.W.	Dishwasher
DWG.	Drawing
E.P.	Emergency Power
EA.	Each
ELEC.	Electrical
EPX.	Epoxy
EQ.	Equal or Equipment
EQUIP.	Equipment
E.R.	Epoxy Resin
E.S.	Emergency Shower
E.W.	Eye Wash
EXH.	Exhaust
EXIST.	Existing
F.D.	Floor Drain
F.E.	Fire Extinguisher
F.H.	Fume Hood
FLR.	Floor
FLAM.	Flammable
F.O.F.	Face of Finish
FRZ.	Freezer
F.S.	Floor Sink
FT.	Foot or Feet
FUT.	Future
G.	Natural Gas
G.C.R.	Gas Cylinder Restraint
H2	Hydrogen
H.B.	Hose Bib
H.B./O.S.	Hose Bib & Overhead Spray
H/CW.	Hot/Cold Water Mixing Valve
He	Helium
H.P. AIR	High Pressure Air
HT.	Height
I.D. (Dim)	Inside Diameter
INCL.	Include
INCUB.	Incubator
INT.	Interior
K.O.	Knockout
K.S.	Knee Space
LAB.	Laboratory
L.A.F.	Laminar Airflow Hood
LAV.	Lavatory
LIQ.	Liquid
LKR.	Locker
LN2	Liquid Nitrogen
MAX.	Maximum
MECH.	Mechanical
MFR.	Manufacturer
MIC.	Microscope
MIN.	Minimum
MISC.	Miscellaneous
N2	Nitrogen
NEG.	Negative
N.I.C.	Not in Contract
NO. or #	Number
NOM.	Nominal
N.T.S.	Not to Scale
O2	Oxygen
O.C.	On Center
O.D. (Dim)	Outside Diameter
O.F.C.I.	Owner Furnished/ Contractor Installed
O.F.O.I.	Owner Furnished/ Owner Installed
OH.	Overhead
OPP.	Opposite
P.C.	Personal Computer
PG. BD.	Peg Board
PL.	Plate
PL. LAM.	Plastic Laminate
POS.	Positive
P.T.D.	Paper Towel Dispenser
PVC.	Polyvinyl Chloride
RAD.	Radius
REFR.	Refrigerator
REG.	Regulator
REQD.	Required
REV.	Reverse
RM.	Room
R.O.	Rough Opening
S.	Sink
S.C.	Solid Core
SCHED.	Schedule
SECT.	Section
SH.	Shelf
SHT.	Sheet
SHT. VINYL	Sheet Vinyl
SIM.	Similar
SMR	Surface Mounted Raceway
SN	Snorkle
S.P.	Soundproof
SPEC.	Specification
SQ.	Square
S.S.	Stainless Steel
STD.	Standard
STM.	Steam
SYM.	Symmetrical
SYN.	Synthetic
TEL.	Telephone
THK.	Thick
T.L.	Twist Lock
TYP.	Typical
U.C.	Under Counter
U.L. FRZ.	Ultra Low Freezer
U.O.N.	Unless Otherwise Noted
V.	Vacuum
VAR.	Variac
V.P.E.	Vacuum Pump Exhaust
W.M.	Wire Mold
W.S.	Work Surface

SINK SCHEDULE

SINK NUMBER AS INDICATED BY S1 ON DRAWINGS
SEE SPECIFICATION SECTION 11604

TAG	SINK MATL	DIMENSIONS (IN.) A	B	DEPTH	MOUNTING TYPE	ACCESSORIES	NOTES
S1	EPOXY	21	17	10	DROP-IN		1
S2	EPOXY	24	18	11	DROP-IN		2

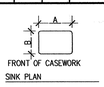

SINK PLAN

SINK NOTES

1. SEE DETAIL 1 / QL3.01 FOR FIXTURE MOUNTING LOCATIONS AT SINK / ACCESSIBLE SINKS.
2. SEE DETAIL 2 / QL3.01 FOR FIXTURE MOUNTING LOCATIONS AT SINK / ACCESSIBLE SINKS.

FIXTURE/FITTING SCHEDULE

FIXTURE/FITTING NUMBER AS INDICATED BY F1 ON DRAWINGS
SEE SPECIFICATION SECTION 11604 FOR FIXTURE MODEL INFORMATION.

TAG	H/CW	CW	D	E			EW	SS	REMARKS	NOTES
F1	H/CW1								DECK MOUNTED	1.
F2		CW1							DECK MOUNTED	1.
F3									NOT USED	
F4		X							BY DIVISION 15	2,3
F20								SS1	RECESSED	4
F30			D1	(2) E1					CASEWORK MOUNTED RECESSED	
F31				E2					DECK MOUNTED PEDESTAL	

ABBREVIATIONS

H/CW	HOT AND COLD WATER	EW	EYEWASH	E	ELECTRICAL
SS	EMERGENCY SHOWER / EYE-FACE WASH	CW	COLD WATER	X	FIXTURE BY DIVISION 15
		D	DATA		

FIXTURE GENERAL NOTES

FIXTURE KEYNOTES

1. SEE SINK SCHEDULE FOR FIXTURE MOUNTING LOCATION.
2. MOUNT AT 18" FOR ICE MACHINE.
3. SEE DETAIL 5/QL301 FOR FIXTURE MOUNTING LOCATION AT WATER POLISHERS.
4. SEE DETAIL 3/QL301 FOR SAFETY SHOWER/EYEWASH INSTALLATION INFORMATION.

EQUIPMENT SCHEDULE

ALL EQUIPMENT CONTRACTOR FURNISHED, CONTRACTOR INSTALLED UNLESS NOTED WITH O (OWNER) UNDER RESPONSIBILITY (RESP)
SEE SPECIFICATION SECTION 11605, LABORATORY EQUIPMENT
EQUIPMENT NUMBER AS INDICATED BY (E#) ON DRAWINGS

EQ #	EQUIPMENT NAME / MODEL	RESP Furn	RESP Inst	POWER	UTIL	REMARKS
E1.	AUTOCLAVE	O	O	220V / 12A		TABLE TOP
E2.	UNDER COUNTER GLASS WASHER	O	O	110V / 16A	HW, FD	
E3.	GAS CYLINDER RACK - CHANNEL					SEE DETAIL 4/QL3.01
E4.	ICE MACHINE	O	O	110V / 15A	CW, FD	
E5.	METAL SHELVING					
E6.	CHEMICAL SHELVING					
E7.	ROCK STORAGE CABINET					
E8.	DEIONIZED WATER POLISHER	O	O	110V	CW	SEE DETAIL 5/QL3.01
E9.	FLAMABLE STORAGE CABINET					36" WIDE
E10.	ACID STORAGE CABINET					36" WIDE
E11.	COMPUTER CART	O	O	110V / 30A		

HOOD SCHEDULE

HOOD NUMBER AS INDICATED BY (H#) ON THE DRAWINGS
SEE SPECIFICATION SECTION 11600 FOR HOOD SPEC. #.

TAG	SPEC. #	WIDTH TYPE	UTILITIES (LEFT / RIGHT)	WEIGHT (LB)	NOTE (SEE BELOW)
H1	CFH1	6'-0" STANDARD	LEFT - 110v DUPLEX RIGHT- 110v DUPLEX	840	
H2	CFH1	4'-0" STANDARD	LEFT - 110v DUPLEX RIGHT- 110v DUPLEX	560	
H3	CFH1	6'-0" STANDARD	LEFT - 110v DUPLEX RIGHT- 110v DUPLEX	840	1

ABBREVIATIONS

HOOD GENERAL NOTES

A. SEE SECTION 18/QL301 FOR TYPICAL FUME HOOD SECTION.

HOOD KEYNOTES

1. PROVIDE PLUG PORT ON GAS CYLINDER SIDE. SEE PLAN.

SHEET INDEX

QL 0.01	SCHEDULES, GENERAL NOTES, LEGEND, SHEET INDEX
QL 0.02	CASEWORK SCHEDULE
QL 2.02	SECOND FLOOR PLAN
QL 3.01	SECTIONS, DETAILS

GENERAL NOTES

1. LABORATORY FURNISHINGS DRAWINGS, (QL SERIES), INDICATE LABORATORY FUME HOODS (SPECIFICATION SECTION 11601). LABORATORY FIXTURES AND FITTINGS (SPECIFICATION SECTION 11604), LABORATORY EQUIPMENT (SPECIFICATION SECTION 11605), CASEWORK AND WORKSURFACES (SPECIFICATION SECTION 12345).
2. SEE ARCHITECTURAL DRAWINGS FOR INTERIOR FINISHES, COLORS, CEILING HEIGHT, AND OTHER RELATED INFORMATION. FOR ACTUAL ROOM DIMENSIONS REFER TO ARCHITECTUAL PLANS. CONTRACTOR SHALL FIELD CHECK ALL DIMENSIONS BEFORE FABRICATION.
3. SEE LABORATORY FURNISHINGS FLOOR PLANS FOR PLUMBING SERVICES FITTING TYPES AND LOCATIONS. LAB SINKS AND CUPSINKS, BOTH WITH TAILPIECES, SHALL BE SUPPLIED AND INSTALLED BY LAB FURNISHINGS CONTACTOR. DIVISION 15 WILL PROVIDE TRAPS AND MAKE FINAL CONNECTIONS TO SERVICES AND WASTE SYSTEM AND PROVIDE PLUMBING SYSTEM HANGERS AND FASTENERS. CASEWORK SUPPLIER SHALL DELIVER FITTINGS TO THE POINT OF INSTALLATION. FITTINGS TO BE INSTALLED AND CONNECTED UNDER DIVISION 15.
4. SEE MECHANICAL/ PLUMBING DRAWINGS FOR HVAC, FUME EXHAUST SYSTEMS AND PLUMBING ROUGHOUTS AND INFORMATION. LABORATORY DRAWINGS INDICATE SOME MOUNTING POSITIONS OR WORK PERFORMED UNDER DIVISION 15.
5. SEE ELECTRICAL DRAWINGS FOR LIGHTING, COMMUNICATIONS, RECEPTACLES, WIREWAYS AND NUMBER AND TYPES OF ELECTRICAL DEVICES. LABORATORY DRAWINGS INDICATE MOUNTING POSITION OF ELECTRICAL PEDESTALS AND OUTLETS WHEN LOCATED AT CASEWORK.
6. COORDINATE ITEMS SUCH AS BENCH SHELF SUPPORT, OVERHEAD SERVICE CARRIERS, FUME HOODS, BRACES THAT PENETRATE FLOOR OR CEILING OR OCCUR IN SPACE BETWEEN SUSPENDED CEILING AND STRUCTURE AND THAT MAY INTERFERE WITH LIGHTING, STRUCTURAL OR MECHANICAL SYSTEMS. BRING SIZE TO ATTENTION OF ARCHITECT IMMEDIATELY.

AS BUILT DRAWING

APPROVAL STAMP
IDENTIFICATION STAMP
DIVISION OF THE STATE ARCHITECT
APP# 107417
AC FLS SS
DATE: 12/21/05

NO.	ISSUED FOR	DATE
1	DSA APPROVAL SET	12/08/05

REGISTERED ARCHITECT ROY S. MIKA C7256 REN. 7-31-07 STATE OF CALIFORNIA
CERTIFICATE

K M D
KAPLAN McLAUGHLIN DIAZ
ARCHITECTURE PLANNING
222 VALLEJO SAN FRANCISCO, CA 94111
(415) 398-5191 FAX (415) 394-7158

AHSC McLellan Copenhagen, LLC
160 Pine Street, Suite 505
San Francisco, California 94111
P 415-490-0505 F 415-676-5864

SOLANO COMMUNITY COLLEGE

SCCD
VALLEJO CENTER
Contract # A003.6123.01.V1

PROJECT NO. 419-201
DATE 12-08-05

SCHEDULES, GENERAL NOTES, LEGEND, SHEET INDEX

QL 0.01

PLOT DATE:

COPYRIGHT © 2004 BY KMD (KAPLAN McLAUGHLIN DIAZ). ALL RIGHTS RESERVED.

PATH: G:\000\000-000\ACAD\SHEETS\

CASEWORK SCHEDULE

SEE SPECIFICATION SECTION 12345

CASEWORK LEGEND

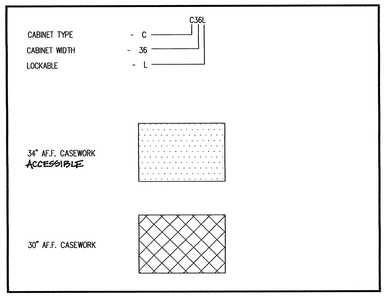

CASEWORK NOTES

1. FIXED CASEWORK IS FLOOR MOUNTED WOOD CASEWORK. U.O.N.
2. ALL COUNTERTOPS TO BE EPOXY RESIN U.O.N.
3. CASEWORK DIMENSIONS INDICATED ON PLANS ARE NOMINAL SIZES. HEIGHT OF BASE CABINETS REFERS TO HEIGHT OF FINISHED BENCHTOP. SIZE CASEWORK HEIGHT TO ACHIEVE THIS DIMENSION. NO CASEWORK UNIT SHALL BE LESS THAN 12" WIDE.
4. CABINETS WITH THE SUFFIX "L" ON THE CABINET TYPE (E.G., TA42L) TO BE LOCKABLE (ALL DRAWERS AND DOORS, U.O.N.).
5. USE FILLER PANELS, AS REQUIRED, FOR GAPS BETWEEN WALLS, CASEWORK, FUME HOODS, AT CORNER CONDITIONS, AT EXPOSED ENDS BETWEEN WALLS AND CASEWORK UNITS AND AT ALL OTHER AREAS TO PROVIDE FINISHED ASSEMBLY.
6. WHERE KNEE SPACES ARE AT THE END OF A SECTION OF BENCH, PROVIDE FULL END PANEL WHERE SHOWN ON PLANS.
7. PROVIDE KNEE BRACE WHERE SHOWN ON PLANS, SPACE BRACE(S) EQUALLY WITHIN KNEE SPACE.
8. PULL SIDE OF SWINGING DOORS SHALL BE TOWARDS BENCH END WHEN THE CABINET IS AT THE END OF THE BENCH. HINGE SIDE SHALL BE AT THE CORNER WHEN THE CABINET IS AT A CORNER CONDITION. THE HINGE MAY BE AT EITHER SIDE WHEN THE CABINET IS NOT AT AN END OR CORNER, UNLESS SWING IS NOTED ON PLANS, OR AS INDICATED ON RETURNED SUBMITTAL.
9. SINKS SHALL BE CENTERED (FROM SIDE TO SIDE) IN SINK BASE CABINETS U.O.N.
10. PROVIDE REMOVABLE BACKPANELS IN ALL DOOR CABINETS & KNEE SPACES U.O.N.
11. WHERE THE TERM "REMOVABLE" IS USED, FASTENERS TO BE SCREWS WITH CUPPED TRIM WASHERS, U.O.N.
12. ALL COUNTERTOPS TO BE 36" A.F.F. U.O.N. SEE CASEWORK LEGEND.
13. SEE DETAIL 7/QL301 FOR FIXED CASEWORK
    SEE DETAIL 28/QL301 FOR TALL CASEWORK

KNEE SPACE

KA	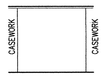	KNEE SPACE: WORKSURFACE ACROSS TOP RETURN PANELS TO WALL ON ADJACENT CASEWORK TO CLOSE OFF SERVICE CHASE BEHIND ADJACENT CABINETS PROVIDE GROMMET PER DETAIL 8 / QL 3.01 IF SPAN GREATER THAN 24" PROVIDE INDENT 2" APRON STRIP IF SPAN GREATER THAN 36" PROVIDE INDENT 4" APRON STRIP
KB	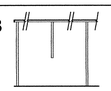	KNEE SPACE- LONG WORKSURFACE: WORKSURFACE ACROSS TOP, NO BACKPANEL, RETURN END PANELS TO WALL: INDENT SEE DETAIL 9/QL 3.01 INTERMEDIATE SUPPORTS: INDENT SEE DETAIL 8 / QL 3.01 WORK SURFACE JOINTS AT RETURN PANELS
KC	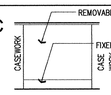	KNEE SPACE: WORKSURFACE ACROSS TOP REMOVABLE BACK PANEL IF SPAN GREATER THAN 24" PROVIDE 2" APRON STRIP IF SPAN GREATER THAN 36" PROVIDE 4" APRON STRIP
KD	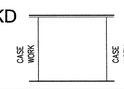	KNEE SPACE (FOR EQUIPMENT): WORKSURFACE ACROSS TOP DO NOT RETURN PANELS TO WALL ON ADJACENT CASEWORK. NO BACKPANEL. IF SPAN GREATER THAN 24" PROVIDE INDENT 2" APRON STRIP IF SPAN GREATER THAN 36" PROVIDE INDENT 4" APRON STRIP
KE	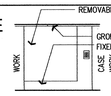	KNEE SPACE: WORKSURFACE ACROSS TOP WORKSURFACE AT PENINSULA BENCHES, WITH A REMOVABLE CLOSURE PANEL AND FIXED PANEL WITH ELECTRICAL, DATA OUTLET & GROMMET,SEE DETAIL 8/ QL 3.01

MOBILE CABINETS

ZA		ROCK STORAGE CART: 4 DRAWER FULL EXTENSION GLIDES 200# CAPACITY DRAWER INTERLOCK 6" WHEELS.

WALL CABINETS

WA		FRAMED GLASS HINGED DOOR: ENCLOSED 30in.HIGH x 16in DEEP CABINET (2) HINGED FRAMED GLASS DOORS (2) ADJ. SHELVES LOCKABLE SEE DETAIL 7 / QL301

SHELVING

SB	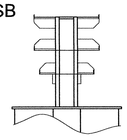	REAGENT SHELF AT PENINSULA BENCH: SUSPENDED RAIL SYSTEM SEE SECTION 13/QL 3.01 SEE PLAN FOR SHELF WIDTH ON MAXLAB BENCHTOP UPRIGHTS SPACED WIDTH OF SHELF
SC	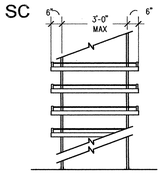	HEAVY DUTY SHELVING: 8'-6" CHANNELS FRAMING (4) SHELVES W/ SEISMIC RODS SEE DETAIL 12/QL 3.01

PEGBOARD/ CARBOY SHELF

PA	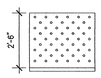	PEGBOARD W/ DRIP TROUGH

BENCHES & TABLES

TBLA	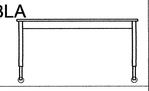	ADJUSTABLE TABLE: 30"-36" TALL ADJUSTABLE LEGS METAL FRAME 30" WIDE EPOXY TOP LOCKABLE CASTORS SEE FLOOR PLAN FOR LENGTH.

TALL CABINETS

TA	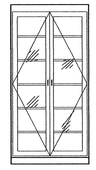	HINGED GLASS DOORS: ENCLOSED 84 IN. HIGH x 22 IN. DEEP (4) ADJUSTABLE SHELVES (1) FIXED SHELVES SEE DETAIL 28 / QL301
TAV		SAME AS TA WITH FOLLOWING: 1 1/2" DIA. VENT AT TOP RIGHT
TB	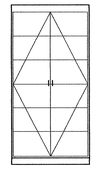	HINGED SOLID DOORS: ENCLOSED 84 IN. HIGH x 22 IN. DEEP (4) ADJUSTABLE SHELVES (1) FIXED SHELVES SEE DETAIL 28 / QL301
TBV	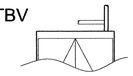	SAME AS TB WITH FOLLOWING: 1 1/2" DIA. VENT AT TOP RIGHT
TMB	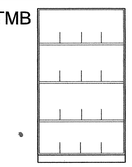 DOORS NOT SHOWN FOR CLARITY	SOLID DOOR MICROSCOPE CABINET: (950C) 84" H X 22" DEEP CABINET (2) HINGED SOLID DOORS (1) FIXED SHELF (2) ADJUSTABLE SHELVES PROVIDE DIVIDERS COMPARTMENT 19"D x 10.75"W x 18.75"H MIN 36"W HOLDS 12 BINOCULAR 48"W HOLDS 16 BINOCULAR IF UNIT IS LESS THAN 24" W, PROVIDE SINGLE DOOR. SEE DETAIL 28 / QL301

BASE CABINETS

A	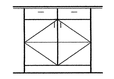	COMBINATION CABINET: (2) DRAWERS (6 IN. NOM. HIGH) (2) HINGED DOUBLE DOORS SINGLE CUPBOARD W/ ADJUSTABLE SHELF IF UNIT IS LESS THAN 30 IN. WIDE, PROVIDE (1) DRAWER AND DOOR
B		(1) DRAWER (6 IN NOM.) (3) EQUAL DRAWERS
C	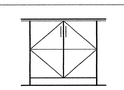	RINGSTAND DOOR CABINET: FULL HEIGHT HINGED DOUBLE DOORS SINGLE CUPBOARD W/ ADJUSTABLE SHELF IF UNIT IS LESS THAN 30 IN. WIDE, PROVIDE (1) DOOR
D		BURRETTE DRAWER CABINET: (2) DRAWERS (4 IN. NOM. HIGH) FULL WIDTH (4) DRAWERS (EQUAL HEIGHT & WIDTH) DIVIDED EQUALLY VERT. BURRETTE DIVIDER INSERTS IN UPPER TWO DRAWERS
E		DRAWER CABINET WITH FILE DRAWERS (2) DRAWERS WITH LOCKS (1) LETTER SIZE FILE DRAWERS WITH LOCK
F	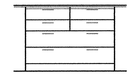	DRAWER CABINET: (2) DRAWERS (6 IN. NOM. HIGH) (2) DRAWERS (6 IN. NOM. HIGH) (4) DRAWERS (EQUAL HEIGHT) TOP TWO DIVIDED EQUALLY VERT. BOTTOM TWO FULL WIDTH
S	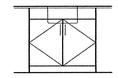	SINK BABINETCABINET: FLUSH APRON STRIP SINGLE CUPBOARD W/ NO SHELVES (2) HINGED DOUBLE DOORS IF UNIT IS LESS THAN 30" W, PROVIDE (1) DOOR.

APPROVAL STAMP

IDENTIFICATION STAMP
DIVISION OF THE STATE ARCHITECT
APPL NO. 107417
AC. RHS TH SS NJC
DATE: 12/21/05

NO.	ISSUED FOR	DATE
1	DSA APPROVAL SET	12/08/05

REGISTERED ARCHITECT
ROY S. LATHA
C7256
REN. 7-31-07
STATE OF CALIFORNIA
CERTIFIED ARCHITECT

K M D
KAPLAN McLAUGHLIN DIAZ
ARCHITECTURE PLANNING
222 VALLEJO SAN FRANCISCO, CA 94111
(415) 398-5191 FAX (415) 394-7158

AHSC McLellan Copenhagen, LLC
160 Pine Street, Suite 505
San Francisco, California 94111
P 415-490-0505 F 415-676-5864

SOLANO COMMUNITY COLLEGE

SCCD
VALLEJO CENTER
Contract # A003.6123.01.V1

PROJECT NO. 419-201

DATE 12-08-05

CASEWORK SCHEDULE
CASEWORK NOTES
AS BUILTS

QL 0.02

PLOT DATE:

COPYRIGHT © 2004 BY KMD (KAPLAN McLAUGHLIN DIAZ). ALL RIGHTS RESERVED.

PATH: G:\000\000-000\ACAD\SHEETS\

FLOOR PLAN KEYNOTES

KEYNOTE AS INDICATED BY (•) ON THE DRAWINGS.

1. Grommet hole. See detail 11 / QL 3.01.
2. ACID neutralization tank and monitor. See plumbing drawings.
3. Projector and projection screen. See architectural drawings.
4. Whiteboard. See architectural drawings.
5. Join vents together, run up to ceiling one location. See mechanical drawings.
6. Owner furnished, owner installed AV rack.

1 PARTIAL SECOND FLOOR PLAN
SCALE 1/4" = 1'-0"

APPROVAL STAMP
IDENTIFICATION STAMP
DIVISION OF THE STATE ARCHITECT
APP. NO: 107417
DATE: 12/21/05

NO.	ISSUED FOR	DATE
1	DSA APPROVAL SET	12/08/05

REGISTERED ARCHITECT
ROY S. LATTA
C7256
REN. 7-31-07
STATE OF CALIFORNIA
CERTIFIED

K M D
KAPLAN McLAUGHLIN DIAZ
ARCHITECTURE PLANNING
222 VALLEJO SAN FRANCISCO, CA 94111
(415) 398-5191 FAX (415) 394-7158

AHSC McLellan Copenhagen, LLC
160 Pine Street, Suite 505
San Francisco, California 94111
P 415-490-0505 F 415-676-5864

SOLANO COMMUNITY COLLEGE

SCCD
VALLEJO CENTER
Contract # A003.6123.01.V1

PROJECT NO.	DATE
419-201	12-08-05

PARTIAL SECOND FLOOR PLAN
AS BUILTS

QL2.02

PLOT DATE:

COPYRIGHT © 2004 BY KMD (KAPLAN McLAUGHLIN DIAZ). ALL RIGHTS RESERVED.

PATH: G:\000\000-000\ACAD\SHEETS\

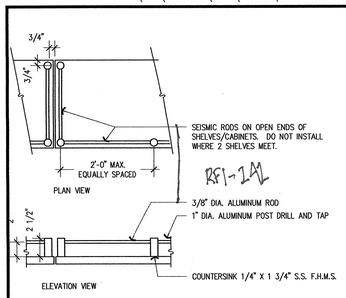

26 SEISMIC ROD DETAIL

1 1/2"=1'-0"

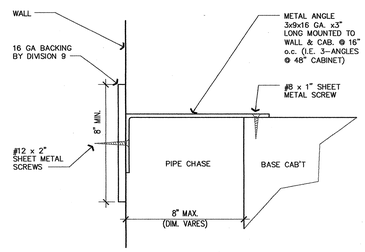

STRUCTURAL CALCULATIONS OF ANCHORAGE REQUIRED PER SPECIFICATION SECTION 12345. THESE DRAWING FOR MINIMUM ANCHORAGE ONLY. THIS DETAIL MAY BE SUPERCEDED BY ARCHITECTURAL DETAILS OR BY CASEWORK INSTALLER AS OUTLINED IN SPECIFICATION SECTION 12345.

21 CABINET ANCHORING AT WALL

3"=1'-0"

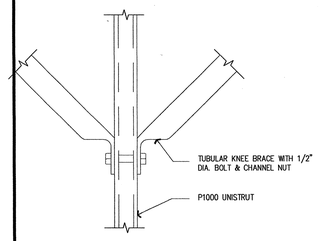

27 SUSPENDED CHANNEL @ CEILING

3"=1'-0"

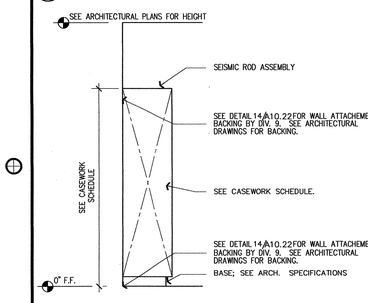

28 SECTION @ WALL TALL CASEWORK

1/2"=1'-0"

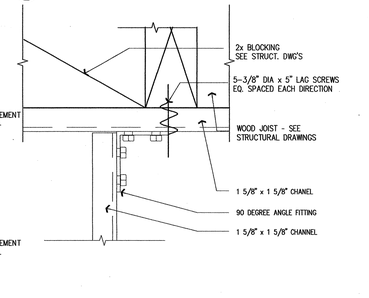

23 SUSPENDED CHANNEL @ CEILING

3"=1'-0"

24 FREE STANDING SHELF SUPPORT

1 1/2"=1'-0"

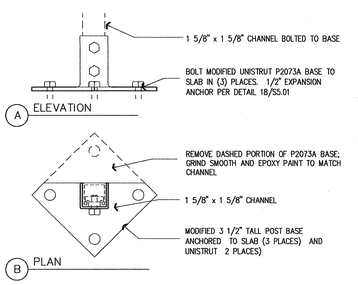

25 ANCHORAGE @ UNISTRUT BASE

3"=1'-0"

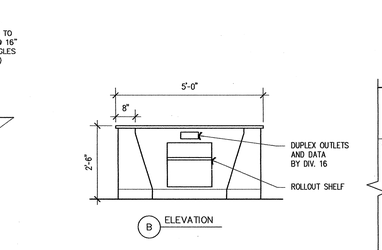

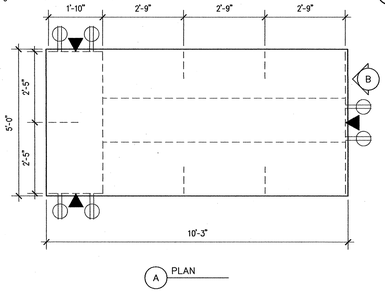

17 STUDENT TABLE

1/2"=1'-0"

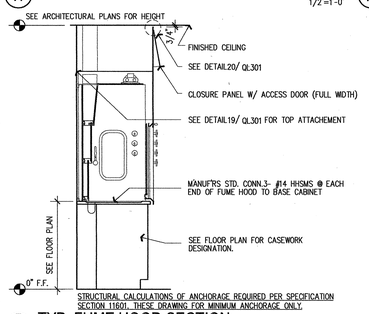

STRUCTURAL CALCULATIONS OF ANCHORAGE REQUIRED PER SPECIFICATION SECTION 11601. THESE DRAWING FOR MINIMUM ANCHORAGE ONLY.

18 TYP. FUME HOOD SECTION

1/2"=1'-0"

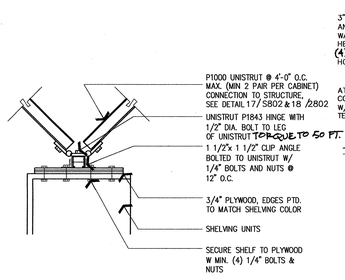

STRUCTURAL CALCULATIONS OF ANCHORAGE REQUIRED PER SPECIFICATION SECTION 12345. THESE DRAWING FOR MINIMUM ANCHORAGE ONLY. THIS DETAIL MAY BE SUPERCEDED BY ARCHITECTURAL DETAILS OR BY CASEWORK INSTALLER AS OUTLINED IN SPECIFICATION SECTION 12345.

19 FUME HOOD TO WALL CONNECTION DETAIL

3" = 1'-0"

20 FUME HOOD CEILING CLOSURE

3"=1'-0"

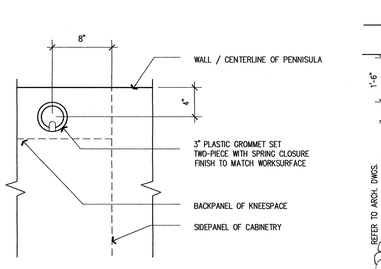

11 GROMMET HOLE

3/4"=1'-0"

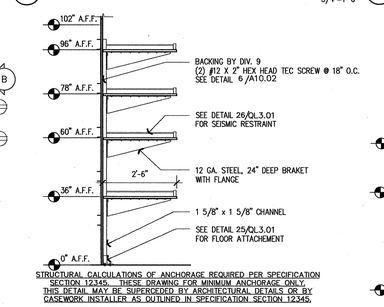

STRUCTURAL CALCULATIONS OF ANCHORAGE REQUIRED PER SPECIFICATION SECTION 12345. THESE DRAWING FOR MINIMUM ANCHORAGE ONLY. THIS DETAIL MAY BE SUPERCEDED BY ARCHITECTURAL DETAILS OR BY CASEWORK INSTALLER AS OUTLINED IN SPECIFICATION SECTION 12345.

12 UNISTRUT @ WALL

1/2"=1'-0"

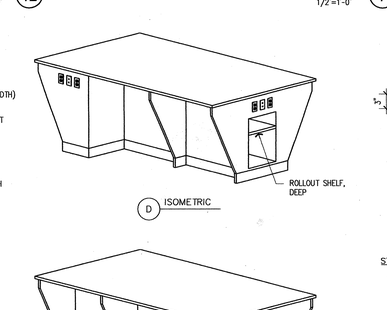

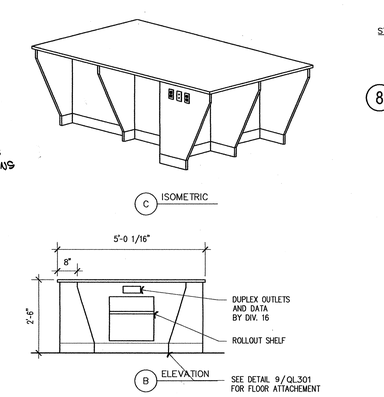

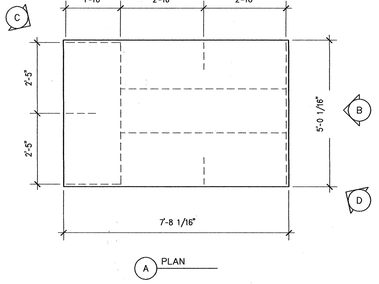

20 STUDENT TABLE

1/2"=1'-0"

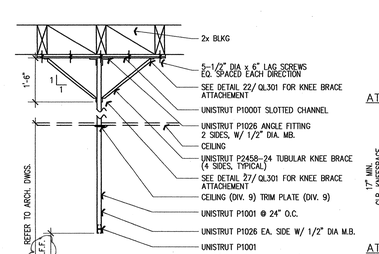

6 SINGLE CHANNEL FRAME

1/2"=1'-0"

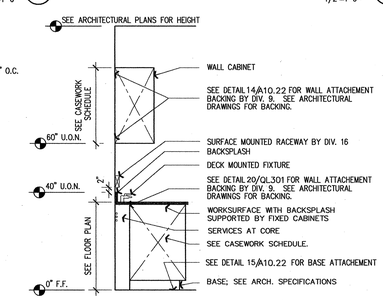

7 CASEWORK@ISLAND BENCH

1/2"=1'-0"

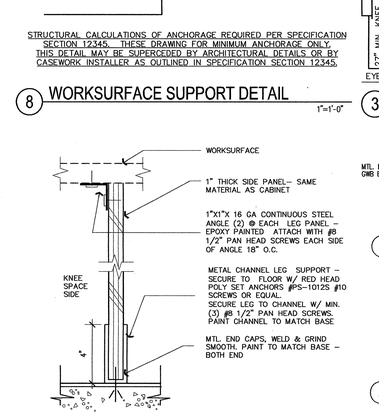

9 SIDE PANEL

3"=1'-0"

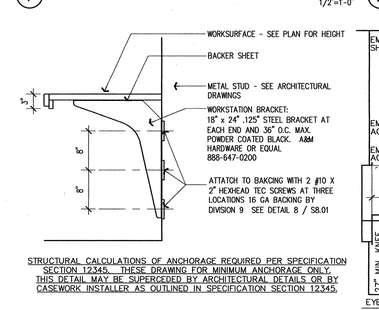

STRUCTURAL CALCULATIONS OF ANCHORAGE REQUIRED PER SPECIFICATION SECTION 12345. THESE DRAWING FOR MINIMUM ANCHORAGE ONLY. THIS DETAIL MAY BE SUPERCEDED BY ARCHITECTURAL DETAILS OR BY CASEWORK INSTALLER AS OUTLINED IN SPECIFICATION SECTION 12345.

8 WORKSURFACE SUPPORT DETAIL

1"=1'-0"

9 SIDE PANEL

3"=1'-0"

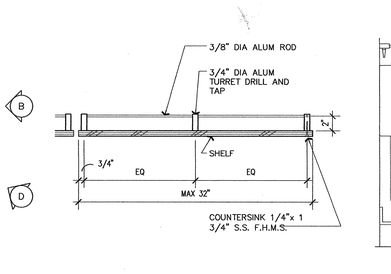

10 CASEWORK@ISLAND BENCH

1 1/2"=1'-0"

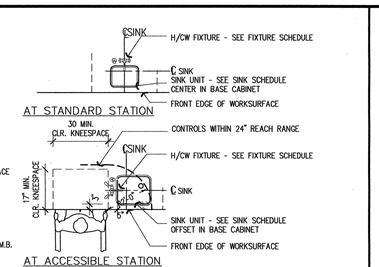

NOTE: DEEP SINK IN NECCESSARY TO PREVENT ACCIDENTAL BACKSPLASH OF CHEMICALS ONTO USER. FRONT APPROACH TO SHALLOW SINK COULD CAUSE HARM TO USER.

1 FIXTURE LOCATIONS @ MED. SINK

3/8"=1'-0"

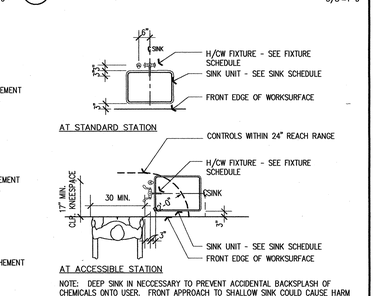

NOTE: DEEP SINK IN NECCESSARY TO PREVENT ACCIDENTAL BACKSPLASH OF CHEMICALS ONTO USER. FRONT APPROACH TO SHALLOW SINK COULD CAUSE HARM TO USER.

2 FIXTURE LOCATIONS @ LARGE SINK

3/8"=1'-0"

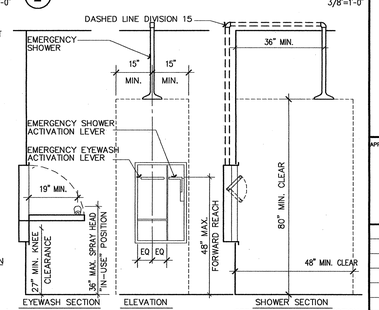

SEE SPECIFICATIONS SECTION 11604 FOR MODEL NUMBER

3 SAFTEY STATION DETAIL

1/2"=1'-0"

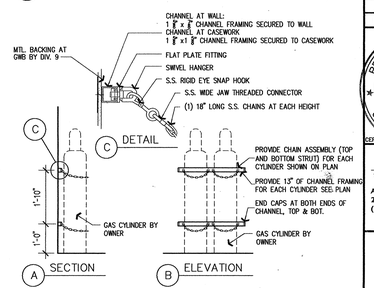

4 GAS CYLINDER RACKS

1/2"=1'-0"

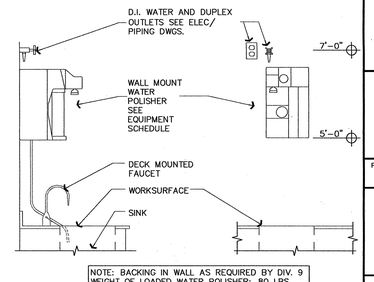

NOTE: BACKING IN WALL AS REQUIRED BY DIV. 9 WEIGHT OF LOADED WATER POLISHER: 80 LBS

5 WATER POLISHER AT SINK

3/4"=1'-0"

APPROVAL STAMP

IDENTIFICATION STAMP
DIVISION OF THE STATE ARCHITECT
APPL-02- 107417
ACC FLS RE SS AL
DATE: 12/21/05

NO.	ISSUED FOR	DATE
1	DSA APPROVAL SET	12/08/05

REGISTERED ARCHITECT ROY S. LAPIA C7256 REN. 7-31-07 STATE OF CALIFORNIA CERTIFIED

K M D
KAPLAN McLAUGHLIN DIAZ
ARCHITECTURE PLANNING
222 VALLEJO SAN FRANCISCO, CA 94111
(415) 398-5191 FAX (415) 394-7158

AHSC McLellan Copenhagen, LLC
160 Pine Street, Suite 505
San Francisco, California 94111
P 415-490-0505 F 415-676-5864

SOLANO COMMUNITY COLLEGE

SCCD
VALLEJO CENTER
Contract # A003.6123.01.V1

PROJECT NO.	DATE
419-201	12-08-05

DETAILS & SECTIONS
AS BUILTS

QL 3.01

PLOT DATE:

COPYRIGHT © 2004 BY KMD (KAPLAN McLAUGHLIN DIAZ). ALL RIGHTS RESERVED.

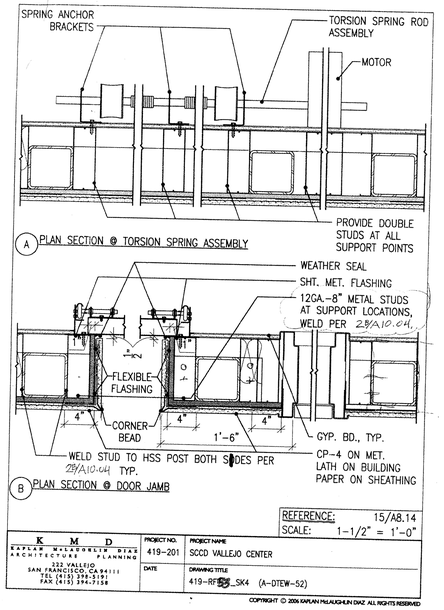

REFERENCE: 15/A8.14
SCALE: 1-1/2" = 1'-0"

K M D
KAPLAN MCLAUGHLIN DIAZ
ARCHITECTURE PLANNING
222 VALLEJO
SAN FRANCISCO, CA 94111
TEL (415) 398-5191
FAX (415) 394-7158

PROJECT NO.	PROJECT NAME
419-201	SCCD VALLEJO CENTER
DATE	DRAWING TITLE
	419-RFS2_SK4 (A-DTEW-52)

COPYRIGHT © 2006 KAPLAN MCLAUGHLIN DIAZ ALL RIGHTS RESERVED

GENERAL STRUCTURAL NOTES

I. GENERAL

A. DRAWINGS AND SPECIFICATIONS REPRESENT FINISHED STRUCTURE. CONTRACTOR SHALL BE RESPONSIBLE FOR MEANS AND METHODS OF CONSTRUCTION INCLUDING BUT NOT LIMITED TO SHORING AND TEMPORARY BRACING. THE CONTRACTOR SHALL TAKE ALL NECESSARY MEASURES TO INSURE SAFETY OF ALL PERSONS AND STRUCTURES AT THE SITE AND ADJACENT TO THE SITE. OBSERVATION VISITS TO THE SITE BY THE ARCHITECT, ENGINEER OR CONSTRUCTION MANAGER SHALL NOT RELIEVE THE CONTRACTOR OF SUCH RESPONSIBILITY.

B. HOLES AND OPENINGS THROUGH WALLS AND FLOORS FOR DUCTS, PIPING AND VENTILATIONS SHALL BE COORDINATED BY THE CONTRACTOR WHO SHALL VERIFY SIZES AND LOCATION OF SUCH HOLES OR OPENINGS WITH THE MECHANICAL, PLUMBING, AND ELECTRICAL DRAWINGS AND THESE SUB-CONTRACTORS.

C. NO PIPES OR DUCTS SHALL BE EMBEDDED IN SLABS OR WALLS UNLESS SPECIFICALLY DETAILED OR APPROVED BY THE ARCHITECT.

D. SEE DRAWINGS OTHER THAN STRUCTURAL FOR: KINDS OF FLOOR FINISH AND THEIR LOCATION, FOR DEPRESSIONS IN FLOOR SLABS, FOR OPENINGS IN WALLS AND FLOORS REQUIRED BY ARCHITECTURAL AND MECHANICAL FEATURES, FOR ROADWAY PAVING, WALKS, RAMPS, STAIRS, CURBS, ETC.

E. CONTRACTOR SHALL VERIFY ALL DIMENSIONS AT JOB SITE BEFORE COMMENCING WORK AND SHALL REPORT ANY DISCREPANCIES TO THE ARCHITECT.

F. OMISSIONS OR CONFLICTS BETWEEN VARIOUS ELEMENTS OF THE DRAWINGS, NOTES, AND DETAILS SHALL BE BROUGHT TO THE ATTENTION OF THE ARCHITECT AND RESOLVED BEFORE PROCEEDING WITH THE WORK.

G. DO NOT USE SCALED DIMENSIONS; USE WRITTEN DIMENSIONS. WHERE NO DIMENSION IS PROVIDED, CONSULT THE ARCHITECT FOR CLARIFICATION BEFORE PROCEEDING WITH THE WORK.

H. WHERE MEMBER LOCATIONS ARE NOT SPECIFICALLY DIMENSIONED, MEMBERS ARE EITHER LOCATED ON COLUMN LINES OR EQUALLY SPACED BETWEEN MEMBERS ON COLUMN LINES OR BETWEEN MEMBERS OTHERWISE LOCATED.

I. TYPICAL DETAILS ARE INTENDED TO APPLY TO APPLICABLE SITUATIONS UON. IN GENERAL, TYPICAL DETAILS ARE NOT SPECIFICALLY REFERENCED.

J. IF CERTAIN FEATURES ARE NOT FULLY SHOWN OR CALLED FOR ON THE DRAWINGS OR SPECIFICATIONS, THEIR CONSTRUCTION SHALL BE OF THE SAME CHARACTER AS FOR SIMILAR CONDITIONS THAT ARE CALLED FOR OR SHOWN.

K. THE INTENT OF THE DRAWINGS AND SPECIFICATIONS IS TO CONSTRUCT THE SCHOOL BUILDING IN ACCORDANCE WITH THE 2001 EDITION OF TITLE 24, CALIFORNIA CODE OF REGULATIONS. SHOULD ANY CONDITIONS DEVELOP NOT COVERED BY THE CONTRACT DOCUMENTS WHEREIN THE FINISHED WORK WILL NOT COMPLY WITH TITLE 24, CALIFORNIA CODE OF REGULATIONS, A CHANGE ORDER DETAILING AND SPECIFYING THE REQUIRED WORK SHALL BE SUBMITTED TO AND APPROVED BY DSA BEFORE PROCEEDING WITH THE WORK.

II. DESIGN BASIS

A. APPLICABLE CODE: CALIFORNIA BUILDING CODE (CBC), 2001 EDITION, WITH DSA AMENDMENTS.

B. VERTICAL LIVE LOADS:

1. CLASSROOM: 50 PSF.
2. EXITS AND CORRIDORS: 100 PSF (NON-REDUCIBLE).
3. ROOF: 20 PSF PLUS MECHANICAL.

C. LATERAL LOADS:

1. WIND:
   BASIC WIND SPEED = 70 MPH
   EXPOSURE: C
   IMPORTANCE FACTOR: I = 1.0
2. SEISMIC:
   ZONE: 4
   NEAR SOURCE FACTOR: $N_a = 1.01$
   $N_v = 1.21$
   SITE COEFFICIENT: $C_a = 0.44\ Na$
   $C_v = 0.64\ Nv$
   IMPORTANCE FACTOR: I = 1.15
   SCBF: R = 6.4

   LIGHT-FRAMED WALL
   WITH SHEAR PANEL: R = 5.5

D. FOUNDATION DESIGN CRITERIA

1. SIZES AND ELEVATIONS OF FOOTINGS HAVE BEEN ESTABLISHED BASED ON THE SOILS REPORT:
   TITLE: "GEOTECHNICAL INVESTIGATION ON PROPOSED SOLANO COMMUNITY COLLEGE"
   BY: KC ENGINEERING COMPANY
   DATED: 01 NOVEMBER 2004
   AS EXCAVATION PROGRESSES, CONDITIONS MAY DEVELOP REQUIRING CHANGES IN THESE ELEVATIONS AND/OR FOOTINGS. SUCH CHANGES SHALL BE MADE ONLY AS DIRECTED BY THE SOIL ENGINEER.

2. SOIL CLASSIFICATION: CH
   ALLOWABLE SOIL BEARING PRESSURES ARE:

   FOR SPREAD FOOTING
   DEAD + LIVE LOADS 2800 PSF
   DEAD + LIVE + SEISMIC LOADS 3724 PSF

   FOR CONTINUOUS FOOTING
   DEAD + LIVE LOADS 2500 PSF
   DEAD + LIVE + SEISMIC LOADS 3325 PSF

   FOOTINGS SHALL EXTEND A MINIMUM OF 24" BELOW THE BUILDING'S SLAB ON GRADE AND THE LOWEST ADJACENT SOIL GRADE.

III. MATERIALS

A. CONCRETE

1. REINFORCING STEEL:
   a. BARS: ASTM A615, GRADE 60.
   b. WELDED BARS: ASTM A706, GRADE 60.
   c. ALL CONCRETE SHALL BE REINFORCED UNLESS SPECIFICALLY MARKED 'NOT REINFORCED'.

2. CONCRETE CLASSES: SEE SPECIFICATIONS FOR REQUIREMENTS.

CLASS	USE	WT	STRENGTH
A	FOUNDATIONS, WALLS	145 PCF	3,000 PSI
B	SLABS-ON-GRADE	145 PCF	3,000 PSI
C	LIGHTWEIGHT FILL ON STEEL DECK	110 PCF	3,000 PSI

3. MINIMUM CONCRETE COVER FOR REINFORCING STEEL:

a.	SURFACES PLACED AGAINST EARTH	3"
b.	FORMED SURFACES BELOW GRADE	2"
c.	SURFACES EXPOSED TO WEATHER	2"
d.	BEAM AND COLUMN BARS (INCLUDING STIRRUPS OR TIES)	1½"
e.	EXTERIOR WALL AT EXTERIOR FACE	1½"
f.	SLABS AND WALLS NOT EXPOSED TO WEATHER	1"

B. STEEL

1.

SHAPE	MATERIAL
WIDE FLANGES:	ASTM A992, GRADE 50
PLATES:	ASTM A36, TYP UON ASTM A572, GRADE 50 AT SLRS & AS NOTED
ANGLES & CHANNELS:	ASTM A36
HSS RECTANGULAR:	ASTM A500, GRADE B
HSS ROUND:	ASTM A500, GRADE B

2. HIGH STRENGTH BOLTS (HSB): ASTM A325N TYP UON
   ASTM A325-SC AT SLRS CONN & AS NOTED
3. STEEL DECK: ASTM A653, GRADE A.
4. WELDING ELECTRODES: E-70. ALL SLRS WELDS AND THOSE WELDS NOTED "CVN" SHALL USE ELECTRODES WITH CHARPY V-NOTCH VALUES OF 20FT-LBS AT - 20 DEGREES F OR BETTER.
5. ANCHOR RODS: ASTM F1554: Fy = 36 KSI UON. Fy = 55 OR 105 KSI AS NOTED ON DRAWINGS.
6. WELDED STUDS: FLUX FILLED HEADED ANCHOR STUDS TYPE H4L OR S3L BY NELSON OR EQUAL.
7. STRUCTURAL STEEL MEMBERS AND THEIR CONNECTIONS DENOTED "AESS" SHALL COMPLY WITH SECTION 10, ARCHITECTURALLY EXPOSED STRUCTURAL STEEL OF THE AISC CODE OF STANDARD PRACTICE, FOR FABRICATION, ERECTION TOLERANCES AND SURFACE FINISHES.

C. WOOD

1. FRAMING LUMBER – DOUGLAS FIR;
   a. JOISTS AND RAFTERS: NO. 1.
   b. POSTS, BEAMS, AND HEADERS: NO. 1.
   c. STUDS, PLATES, BLOCKS, LIGHT FRAMING AND MISC: NO. 2.
   d. ALL LUMBER IN CONTACT WITH CONCRETE 6'-0" OR LESS ABOVE GROUND SHALL BE PRESSURE TREATED DOUGLAS FIR.
   e. LUMBER MOISTURE CONTENT: SEE SPECIFICATIONS
   f. REJECTION OF WOOD MEMBERS: THE PROVISION IN CBC STANDARD 23-1, SECTION 23.104.1, WHICH PERMITS 5 PERCENT OF THE MATERIAL TO FALL BELOW GRADE SHALL NOT BE CONSTRUED TO PERMIT BELOW-GRADE MATERIAL TO BE USED AS LOAD-CARRYING MEMBERS WHICH HAVE BEEN DESIGNED FOR SPECIFIED ALLOWABLE STRESSES AND ACCEPTABLE SAFETY FACTORS. MATERIALS WHICH FALL BELOW GRADE SHALL BE REJECTED FOR LOAD-CARRYING USE. WOOD MEMBERS WHICH ARE REQUIRED TO CARRY DESIGN LOADS AND WHICH THE PROJECT ARCHITECT, ENGINEER OR INSPECTOR JUDGE TO BE MISGRADED SHALL BE REINSPECTED BY A QUALIFIED LUMBER GRADING INSPECTOR TO VERIFY THE PROPER GRADING OF THE MATERIAL. WOOD MEMBERS WHICH HAVE PERMISSIBLE GRADE CHARACTERISTICS OR DEFECTS IN SUCH COMBINATION AS TO AFFECT THE SERVICEABILITY OF THE MEMBER SHALL BE REJECTED BY THE PROJECT INSPECTOR WITH THE CONCURRENCE OF THE ARCHITECT OR STRUCTURAL ENGINEER.
2. PLYWOOD SHEATHING:
   a. ROOF SHEATHING: 1/2 INCH STRUCT I, EXPOSURE 1 APA RATED 32/16.
   b. WALL SHEATHING: 1/2 INCH STRUCT I, EXPOSURE 1
3. PREFABRICATED WOOD OPEN WEB JOISTS: BY TRUS JOIST REPORT NO. PFC-4354
4. GLUED-LAMINATED BEAMS:
   a. 24FV4 FOR SIMPLE SPANS AND 24FV8 FOR CANTILEVERED AND CONTINUOUS BEAMS.
   b. APPEARANCE: INDUSTRIAL GRADE TYP.; ARCHITECTURAL GRADE IF EXPOSED.
   c. CAMBER TO RADIUS OF 1600' UON
   d. ALL GLULAM BEAMS SHALL BE CONTINUOUSLY INSPECTED DURING FABRICATION BY A GLUE FABRICATION INSPECTOR APPROVED BY DSA. ALL GLULAM BEAMS SHALL BE STAMPED WITH AN IDENTIFICATION MARK.
5. PARALLAM (PSL) AS MANUFACTURED BY TRUS JOIST REPORT NO. ER-4979 (DSA PA-047)
6. FRAMING HARDWARE: AS MANUFACTURED BY SIMPSON CO. OR APPROVED EQUAL. SIMPSON DESIGNATIONS USED.
7. NAILS: COMMON WIRE GAGE UON. NAILING TO CONFORM TO CBC TABLE 23-II-B-1, UON.
   a. USE OF MACHINE NAILING IS SUBJECT TO A SATISFACTORY JOBSITE DEMONSTRATION FOR EACH PROJECT AND THE APPROVAL OF THE PROJECT ARCHITECT OR STRUCTURAL ENGINEER AND DSA. THE APPROVAL IS SUBJECT TO CONTINUED SATISFACTORY PERFORMANCE. IF THE NAIL HEADS PENETRATE THE OUTER PLY MORE THAN WOULD BE NORMAL FOR A HAND-HELD HAMMER, OR IF MINIMUM ALLOWABLE EDGE DISTANCES ARE NOT MAINTAINED, THE PERFORMANCE WILL BE DEEMED UNSATISFACTORY AND MACHINE NAILING SHALL BE DISCONTINUED.
8. BOLTS: ASTM A307.
9. PROVIDE LATERAL SUPPORT FOR BEAMS, JOISTS AND RAFTERS.

IV. QUALITY CONTROL

A. THE FOLLOWING WORK REQUIRES TESTS AND/OR INSPECTIONS. FOR SPECIFIC REQUIREMENTS SEE SPECIFICATIONS. INSPECTIONS SHALL BE MADE IN ACCORDANCE WITH CBC 1701A BY A DSA APPROVED SPECIAL INSPECTOR RETAINED BY THE OWNER.

1. FOOTING EXCAVATION
2. SOIL COMPACTION
3. REINFORCING STEEL & ANCHOR BOLTS
4. CONCRETE
5. EXPANSION BOLTS
6. GROUTED DOWELS
7. WELDING: REBAR, STRUCTURAL STEEL, METAL DECK, WELDED STUDS
8. HIGH STRENGTH BOLTS
9. PLYWOOD SHEAR NAILING AND HARDWARES

B. A PARTIAL LISTING OF REQUIRED STRUCTURAL SUBMITTALS FOLLOWS. CONSULT THE SPECIFICATIONS FOR A COMPLETE LISTING OF SUBMITTAL REQUIREMENTS.

1. CONCRETE MIX DESIGNS
2. GROUT MIX DESIGNS
3. CONSTRUCTION JOINT LAYOUT & CONTROL JOINT LAYOUT
4. REINFORCING STEEL SHOP DRAWINGS
5. STRUCTURAL STEEL AND STEEL DECK SHOP DRAWINGS
6. MANUFACTURER'S DATA FOR INSERTS, GROUTS & EPOXIES
7. WELDING ELECTRODE DATA AND WELDING PROCEDURE SPECIFICATIONS
8. PLYWOOD NAILS AND NAILING MACHINE DATA

V. DEFERRED SUBMITTALS

DEFERRED SUBMITTALS SHALL FIRST BE SUBMITTED TO THE PROJECT ARCHITECT AND/OR THE ENGINEER OF RECORD FOR REVIEW AND COORDINATION. FOLLOWING THE COMPLETION OF THE ARCHITECT'S OR ENGINEER'S REVIEW, A SUBMITTAL TO DSA SHALL BE MADE FOR REVIEW AND APPROVAL. THIS SUBMITTAL SHALL INCLUDE A LETTER STATING THAT THE PROJECT ARCHITECT/ENGINEER REVIEW HAS BEEN COMPLETED AND THAT PLANS AND CALCULATIONS FOR THE DEFERRED ITEMS COMPLY WITH CBC, CALIFORNIA CODE OF REGULATIONS 106.3.4.2.

VI. ABBREVIATIONS

Φ	DIAMETER
AESS	ARCHITECTURALLY EXPOSED STRUCTURAL STEEL
AB	ANCHOR BOLT
AR	ANCHOR ROD
ARCH	ARCHITECTURAL
ARCH	ARCHITECTURAL
B.F.	BRACED FRAME
BM	BEAM
BOT	BOTTOM
CB	COLUMN BASE
CL	CENTER LINE
CJ	CONSTRUCTION JOINT
CLR	CLEAR
C.O.	CONTRACTOR'S OPTION
COL	COLUMN
CONN	CONNECTION
CONT	CONTINUOUS
CJP	COMPLETE JOINT PENETRATION
CTR	CENTER
DCW	DEMAND CRITICAL WELD
DET	DETAIL
DP	DRILLED PIER
DWG	DRAWING
(E)	EXISTING
EA	EACH
EF	EACH FACE
EL OR ELEV	ELEVATION
ELECT	ELECTRICAL
EQ	EQUAL
EW	EACH WAY
EXT	EXTERIOR
FDN	FOUNDATION
FIN	FINISH
FLR	FLOOR
FOC	FACE OF CONCRETE
FRM'G	FRAMING
FTG	FOOTING
GA	GAUGE
GALV	GALVANIZED
GB	GRADE BEAM
HDR	HEADER
HORIZ	HORIZONTAL
HSB	HIGH STRENGTH BOLT
HT	HEIGHT
ID	INSIDE DIAMETER
INT	INTERIOR
JT	JOINT
LLH	LONG LEG HORIZONTAL
LLBB	LONG LEG BACK TO BACK
LLV	LONG LEG VERTICAL
LT	LIGHT
MB	UNFINISHED MACHINE BOLTS
MAX	MAXIMUM
MECH	MECHANICAL
MFR	MANUFACTURER
MTL	METAL
MIN	MINIMUM
MISC	MISCELLANEOUS
(N)	NEW
NIC	NOT IN CONTRACT
NOM	NOMINAL
NTS	NOT TO SCALE
OC	ON CENTER
OD	OUTSIDE DIAMETER
OPG	OPENING
OPP	OPPOSITE
PA	PURLIN ANCHOR
PAF	POWER ACTUATED FASTENER
PAR	PARALLEL
PERP	PERPENDICULAR
℄	PLATE
PJP	PARTIAL JOINT PENETRATION
PT	POINT
PTN	PARTITION
REF	REFERENCE
REINF	REINFORCEMENT
REQ	REQUIRED
SAD	SEE ARCHITECTURAL DRAWINGS
SCHED	SCHEDULE
SECT	SECTION
SHT	SHEET
SIM	SIMILAR
SLRS	SEISMIC LOAD RESISTING SYSTEM
SMD	SEE MECHANICAL DRAWINGS
SPA	SPACE
SPEC	SPECIFICATION
SQ	SQUARE
STAGG	STAGGERED
STD	STANDARD
STL	STEEL
STRUCT	STRUCTURAL
SYMM	SYMMETRICAL
T&B	TOP AND BOTTOM
THRD	THREADED
TOC	TOP OF CONCRETE
TOF	TOP OF FOOTING
TOS	TOP OF STEEL
TOSH	TOP OF SHEATHING (PLYWOOD)
TOW	TOP OF WALL
TOP	TOP OF PLATE
TYP	TYPICAL
UON	UNLESS OTHERWISE NOTED
VERT	VERTICAL
VIF	VERIFY IN FIELD
WF	WIDE FLANGE
WP	WORK POINT
WT	WEIGHT

LEGEND

SYMBOL	DESCRIPTION	REFERENCE
(3)	GRID NUMBER FOR (N) BUILDING	PLAN SHEETS
	CHANGE IN FINISH FLOOR ELEVATION	11/S5.01, 6/S7.04
	CONCRETE CURB ON SLAB	7/S5.01, 18/S7.02
	SLOPED OR DEPRESSED SLAB	11/S5.01, 6/S7.04
S – – – S	STEP IN FOOTING OR GRADE BEAM ELEVATION	3/S5.02
BF–#	BRACED FRAME: SLRS FOR ALL COL, BEAM, BRACE, & CONN	SHEETS S3.01
MF–#	MOMENT FRAME: SLRS FOR ALL COL, BEAM, & CONN	SHEET S3.01
CX	STEEL COLUMN	14/S7.01
(+12'-6")	ELEVATION	PLAN SHEETS
GBX	GRADE BEAM TYPE	2/S5.02
FX, FWX	SPREAD FOOTING TYPE	2/S5.02
	WELDED CONNECTION AT T&B FLANGE OF BEAM FOR MOMENT CONNECTION (SLRS)	1/S7.04
	WELDED CONNECTION AT T&B FLANGE OF BEAM FOR MOMENT CONNECTION	8/S7.01
	WELDED CONNECTION AT TOP AND BOTTOM FLANGE OF BEAM AT CANTILEVER	10/S7.01
F	MODIFICATION TO SHEAR TAB 1 = 1"Φ BOLTS F = FULL DEPTH TAB	4/S7.01
< +2" >	CAMBER UP AT MIDSPAN OF BEAM	PLAN SHEETS
W18x35 [X,Y,Z]	WELDED STUDS	13/S7.02, 14/S7.02
	CONCRETE FILL OVER METAL DECKING	3/S7.02
	METAL DECKING (NO CONC.)	3/S7.02
W18x35*	BEAM LOCATION DEPENDENT ON ARCH OR M/E/P EQUIPMENT	SMD
X	PLYWOOD SHEARWALL: PLY SHEATHING OVER METAL STUDS	14/S8.01, 15/S8.01
HDX	HOLDOWN TYPE	19/S8.01
	PLYWOOD ROOF SHEATHING	9/S8.02

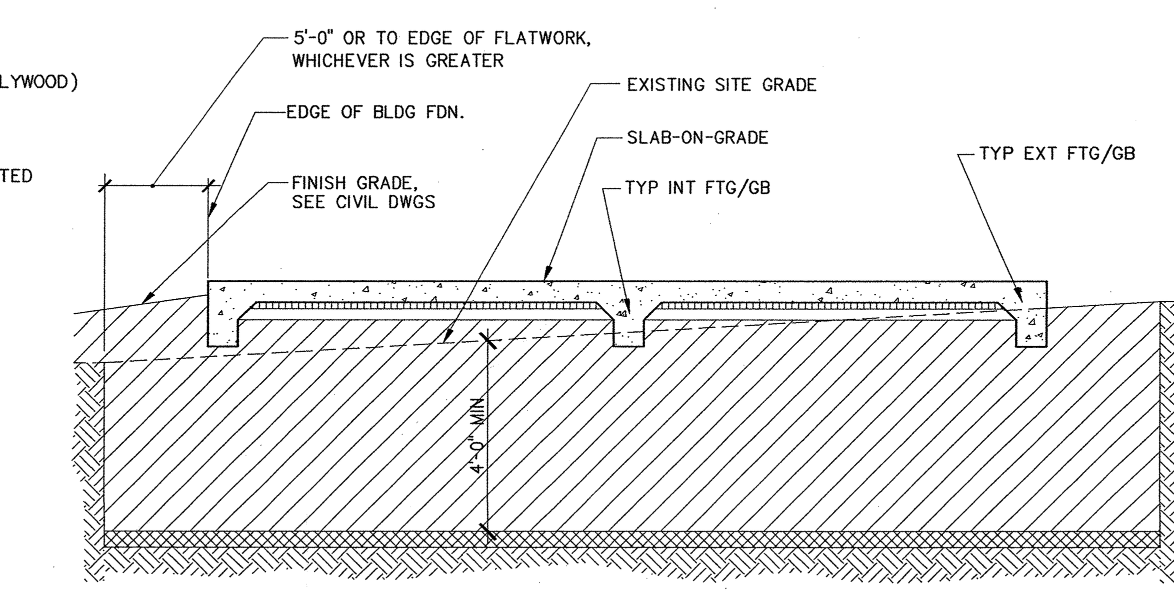

LEGEND

- UNDISTURBED NATIVE SOIL
- SCARIFY 12 INCHES, MOISTURE CONDITION TO AT LEAST 3% ABOVE OPTIMUM AND COMPACT TO MINIMUM OF 90% OF ASTM D1557-91 LABORATORY MAXIMUM DENSITY.
- NATIVE OR IMPORTED FILL MATERIAL COMPACTED TO A MINIMUM OF 90% OF THE ASTM D1557-91 LABORATORY MAXIMUM DENSITY. UPPER 2'-0" OF FILL SHALL BE LOW TO NON-EXPANSIVE MATERIAL. BY MEANS OF IMPORTED FILL OR LIME TREATMENT. SEE SPECIFICATIONS FOR FURTHER INFORMATION.
- 2" DAMP SAND OVER CONTINUOUS IMPERMEABLE MEMBRANE OVER 4" FREE DRAINING GRAVEL
- CONCRETE SLAB-ON-GRADE AND FOOTING OF NEW BUILDING.

NOTES:

1. THIS DETAIL PRESENTS THE MINIMUM REQUIREMENTSFOR ENGINEERED FILL BELOW THE FOUNDATIONS AND SLAB-ON GRADE. SEE GEOTECHNICAL REPORT (SOILS REPORT) FOR COMPLETE INFORMATION.
2. VERTICAL SIDEWALLS ARE SHOWN FOR ILLUSTRATION PURPOSES ONLY, SLOPED SIDEWALLS MAY BE REQUIRED.
3. SEE GEOTECHNICAL REPORT (SOILS REPORT) DEFINED IN GENERAL NOTES SECTION II.D.1 THIS SHEET, FOR COMPLETE SOIL PREPARATION INFORMATION CONTACT ARCHITECT FOR INFORMATION ON OBTAINING A COPY OF REPORT.
4. FOR SITE GRADING REQUIREMENTS SEE CIVIL DRAWINGS.

4 TYPICAL FOUNDATION AND SLAB SUBGRADE PREPARATION

APPROVAL STAMP
IDENTIFICATION STAMP
DIVISION OF THE STATE ARCHITECT
APPL 02- 107417
AC ____ FLS ____ SS RL
DATE: 12/21/05

NO.	ISSUED FOR	DATE
1	DSA APPROVAL SET	12/08/05

CERTIFIED BY
REGISTERED PROFESSIONAL ENGINEER JOSEPH R. SUTTON NO. 2185 Exp. 12-31-05 STRUCTURAL STATE OF CALIFORNIA

K M D
KAPLAN McLAUGHLIN DIAZ
ARCHITECTURE PLANNING
222 VALLEJO SAN FRANCISCO, CA 94111
(415) 398-5191 FAX (415) 394-7158

DASSE

SOLANO COMMUNITY COLLEGE

SCCD
VALLEJO CENTER
Contract # A003.6123.01.V1

PROJECT NO.	DATE
419-201	12-08-05

GENERAL STRUCTURAL NOTES & SYMBOLS
AS BUILTS

S1.01

FILE: E:\2004 Jobs\04B176\Struct\04B176S101.dwg07/13/05 at 16:01
XREF: E:\2004 Jobs\04B176\Struct\04B176S_TB.dwg

PLOT DATE:

COPYRIGHT © 2004 BY KMD (KAPLAN McLAUGHLIN DIAZ). ALL RIGHTS RESERVED.

SEE SHEET S2.12

SEE SHEET S2.12

RFI-048 ADDED FOOTING UNDER WALL

RFI-040 THIS COLUMN FOOTING CHANGED TO 2'-3" DEEP

SEE RFI-106 COLUMN MOVED

5" CONC SLAB ON GRADE PER 3/S5.01
TOC=0'-0" TYP, U.N.O.

TOC=0'-0 1/2"

TOC=0'-2"

TOC=-4'-0"

TOC=-0'-4"

BASE PLATE -2'-3 1/2"

TOF(FTG)=BOF(GB2)

TOF (GB) -0'-11"

TOF=-0'-11"

TOF=-1'-4"

TYP CLADDING BELOW WINDOW 20/S8.01

STRINGER PER 5/S7.05

THICKENED SLAB PER 4/S7.05

TYP AT INT GB 7/S5.02

TYP AT EXT GB 11/S5.02

CONC. HOUSEKEEPING PAD PER 7/S5.01 SMD FOR DIMS

SUMP PIT, SAD

ELEVATOR PIT

BOF = BOT OF ELEVATOR PIT

ELECTRICAL CONDUITS THROUGH GB PER SEE ELECT DWGS 14/S5.01

BF-1, BF-1.5, BF-2, BF-3, BF-4, BF-01, MF-2

GB1, GB2, GB3

CBF F8A

C1 F6, C1 F8, C1 F7, C2 F8, C2 F7, C4 F3, C4 F4

CMF F4

WP

R=39'-4"

22'-10"

7'-0"

26'-10"

23'-3 1/2"

189'-8"

30'-0"

29'-10"

24'-10"

24'-6"

20'-1"

45'-0"

15'-8"

5'-0"

4'-9"

25'-1"

2'-3"

1'-5"

3'-0"

2'-6"

1'-6"

2'-6 3/4"

2'-10 3/4"

8'-7 1/4"

7'-10 1/2"

9'-8 1/4"

1'-8 1/2"

13/S3.01

12/S3.01

3a/S5.01

FOUNDATION PLAN
CLASSROOM BLDG

1/8"=1'-0"

N

Copy sent by e-mail to: Ace Iron, & R. E. Maher on 9-1-06

Ralph Larsen & Son, Inc.
Request for Information 106
Detailed, RFIs Grouped by RFI Number

Vallejo Center for Solano Community College Dist
Northgate Business Park
540 Columbus Parkway
Vallejo, CA 94591
Project # 3664
Tel: (707) 648-8527 Fax: (707) 553-0728
Ralph Larsen & Son, Inc.

RFI #: 106
Answer Company
Answered By
Author Company
Ralph Larsen & Son, Inc.
300 4th Avenue
San Mateo, CA 94401
Author
Date Created: 8/31/2006
Authored By
Jay Tucker

Co-Respondent
Author RFI Number

Subject
And/or bolt location error correction proposal
Discipline
Category

Cc Company Name Contact Name Copies Notes

Question
Date Required: 9/13/2006
We have discovered that the anchor bolts for the column located at GRID INTERSECTION 3 at C are 1 1/4" West from the required location.
1. May we squeeze the column from the base plate, move the column EAST 1 1/4" and re weld column to the base plate?

Suggestion

Answer
Date Answered:

SINCE THIS IS A GRAVITY-LOAD-CARRYING COLUMN,
IT IS ACCEPTABLE TO RELOCATE THE COLUMN AS PROPOSED.
Chih-hung Chang

FOUNDATION PLAN NOTES:

1. SEE GENERAL NOTES ON SHEET S1.01. SEE SECTION II.D. FOR FOUNDATION DESIGN CRITERIA.
2. SEE TYPICAL CONCRETE DETAILS ON SHEET S5.01.
3. FOUNDATION PLAN IS TAKEN ABOVE SLAB-ON-GRADE. NOMINAL TOP OF SLAB ELEVATION IS CALLED OUT IN PLAN. RELATIVE SLAB ELEVATIONS WITH RESPECT TO SLAB REFERENCE ELEVATION ARE SHOWN THUS: (-0"-2").
4. ELEVATIONS OF TOP OF FOOTINGS WITH RESPECT TO SLAB REFERENCE ELEVATIONS ARE SHOWN THUS: TOF= -0"-11"
5. EXCAVATIONS SHALL BE MADE AS NEAR AS POSSIBLE TO THE NEAT LINES REQUIRED BY THE SIZE AND SHAPE OF THE STRUCTURE. NO MATERIAL IS TO BE EXCAVATED UNNECESSARILY.
6. ALL FOUNDATION EXCAVATIONS MUST BE REVIEWED AND APPROVED BY THE SOILS ENGINEER PRIOR TO PLACEMENT OF CONCRETE.
7. VERIFY LOCATION OF UNDERGROUND UTILITIES BEFORE EXCAVATION. NOTIFY ARCHITECT PRIOR TO EXCAVATION IN THE EVENT SUCH UTILITIES ARE ENCOUNTERED.
8. FOR DRAINAGE DETAILS, SUMPS, PITS, DAMP PROOFING, TRENCHES, CURBS, EXTERIOR WALKS, UTILITIES, EQUIPMENT DETAILS, STEPS, ETC., SEE DRAWINGS OTHER THAN STRUCTURAL.
9. SLAB CONSTRUCTION AND CONTROL JOINT LOCATIONS SHALL BE APPROVED BY THE ARCHITECT PRIOR TO PLACING ANY CONCRETE.
10. FOR ALL MARKS, SYMBOLS, AND OTHER DESIGNATIONS NOT NOTED SEE LEGEND ON SHEET S1.01.
11. FOR GRID LINE DIMENSIONS NOT SHOWN SEE SHEET A2.00.

APPROVAL STAMP
IDENTIFICATION STAMP
DIVISION OF THE STATE ARCHITECT
APPL 02- 107417
AC ____ FLS ____ SS NL
DATE: 12/21/05

NO.	ISSUED FOR	DATE
1	DSA APPROVAL SET	12/08/05

CERTIFIED BY

REGISTERED PROFESSIONAL ENGINEER
STEPHEN R. SLATER
No. 21951
Exp. 12-31-05
STRUCTURAL
STATE OF CALIFORNIA

K M D
KAPLAN McLAUGHLIN DIAZ
ARCHITECTURE PLANNING
222 VALLEJO SAN FRANCISCO, CA 94111
(415) 398-5191 FAX (415) 394-7158

DASSE
Skopp Brace Inc.
Concretes Engineers
San Mateo/Santa Clara/Alameda/Contra Costa/Sonoma/Marin/Napa/Solano
San Diego/Orange/Riverside/San Bernardino/Los Angeles/Ventura/Kern Counties
(415) 453-0555
www.dasse.com

SOLANO COMMUNITY COLLEGE

SCCD
VALLEJO CENTER
Contract # A003.6123.01.V1

PROJECT NO.	DATE
419-201	12-08-05

CLASSROOM BLDG AND LOBBY
FOUNDATION PLAN
AS BUILTS

S2.11

FILE: E:\2004 Jobs\04B176\Structure\04B176S211_S212.dwg07/13/05 at 14:50
XREF: E:\2004 Jobs\04B176\Structure\04B176S_TB.dwg
XREF: o-rfp01.dwg
XREF: 04B176S_grids.dwg

PLOT DATE:

COPYRIGHT © 2004 BY KMD (KAPLAN McLAUGHLIN DIAZ). ALL RIGHTS RESERVED.

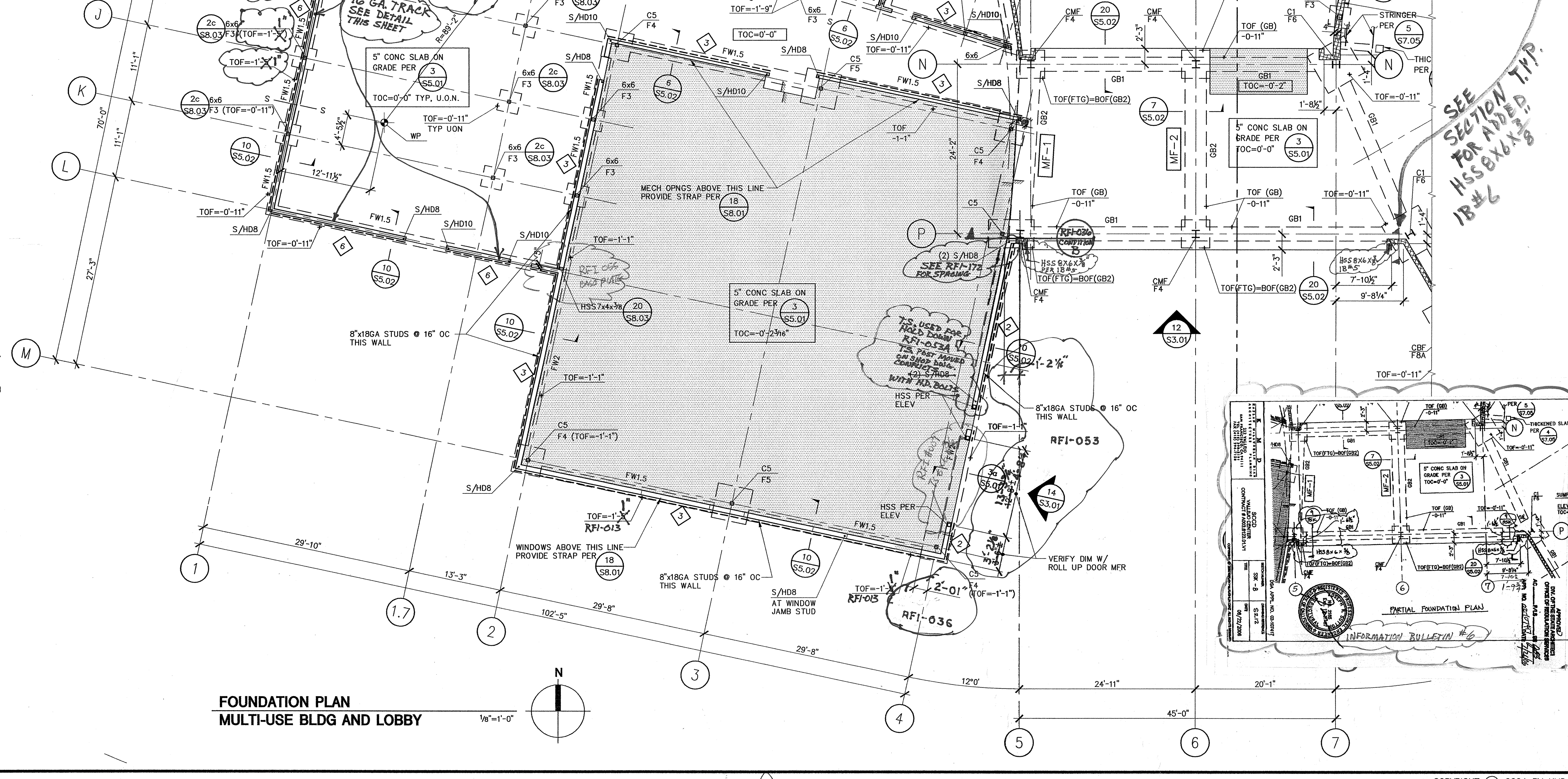

FOUNDATION PLAN NOTES

1. SEE GENERAL NOTES ON SHEET S1.01. SEE SECTION II.D FOR FOUNDATION DESIGN CRITERIA.
2. SEE TYPICAL CONCRETE DETAILS ON SHEET S5.01.
3. FOUNDATION PLAN IS TAKEN ABOVE SLAB-ON-GRADE. NOMINAL TOP OF SLAB ELEVATION IS CALLED OUT IN PLAN. RELATIVE SLAB ELEVATIONS WITH RESPECT TO SLAB REFERENCE ELEVATION ARE SHOWN THUS: (-0'-2").
4. ELEVATIONS OF TOP OF FOOTINGS WITH RESPECT TO SLAB REFERENCE ELEVATIONS ARE SHOWN THUS: TOF= -0'-11', AND ARE MINIMUM DEPTH REQUIREMENTS. COORDINATE FINAL FOOTING ELEVATIONS WITH FINAL SITE GRADING AND LANDSCAPING PLANS. SEE DETAILS ON SHEET S5.02.
5. EXCAVATIONS SHALL BE MADE AS NEAR AS POSSIBLE TO THE NEAT LINES REQUIRED BY THE SIZE AND SHAPE OF THE STRUCTURE. NO MATERIAL IS TO BE EXCAVATED UNNECESSARILY.
6. ALL FOUNDATION EXCAVATIONS MUST BE REVIEWED AND APPROVED BY THE SOILS ENGINEER PRIOR TO PLACEMENT OF CONCRETE.
7. VERIFY LOCATION OF UNDERGROUND UTILITIES BEFORE EXCAVATION. NOTIFY ARCHITECT PRIOR TO EXCAVATION IN THE EVENT SUCH UTILITIES ARE ENCOUNTERED.
8. FOR DRAINAGE DETAILS, SUMPS, PITS, DAMP PROOFING, TRENCHES, CURBS, EXTERIOR WALKS, UTILITIES, EQUIPMENT DETAILS, STEPS, ETC., SEE DRAWINGS OTHER THAN STRUCTURAL.
9. SLAB CONSTRUCTION AND CONTROL JOINT LOCATIONS SHALL BE APPROVED BY THE ARCHITECT PRIOR TO PLACING ANY CONCRETE.
10. STRUCTURAL STUD WALLS (BEARING AND/OR SHEARWALL) ARE SHOWN ON PLAN AND SHALL BE 6"x18GA STUDS AT 16" OC UNLESS OTHERWISE NOTED. FOR BEARING WALL CONSTRUCTION SEE 9/S8.01, 13/S8.01.

    FOR SHEAR WALL CONSTRUCTION SEE 14/S8.01, 15/S8.01.

    SEE ARCHITECTURAL DRAWINGS FOR NON-STRUCTURAL AND PARTITION WALLS.
11. MARKS ◇X — — — DENOTES PLYWOOD SHEAR WALLS WITH SHEATHING ON THE SIDE(S) OF THE WALL INDICATED. SEE SHEAR WALL SCHEDULE AT 15/S8.01. WHERE EXTENT OF SHEAR WALL LINE CROSSES A WINDOW, DOOR, OR OTHER WALL OPENING PROVIDE PLYWOOD SHEATHING WITH THE THE SPECIFIED NAILING PATTERN ABOVE AND BELOW THE OPENING AND STRAPPING PER 18/S8.01.
12. FOR ALL MARKS, SYMBOLS, AND OTHER DESIGNATIONS NOT NOTED SEE LEGEND ON SHEET S1.01.
13. ALL EXTERIOR WALLS SHALL HAVE CONCRETE CURBS PER 10/S5.02. INTERIOR WALLS AS NOTED ON THE ARCHITECTURAL DRAWINGS, SHALL HAVE CONCRETE CURBS PER 7/S5.01.
14. FOR GRID LINE DIMENSIONS NOT SHOWN SEE SHEET A2.00.

FILE: E:\2004 Jobs\04B176\Struct\04B176S211.dwg09/21/04 at 15:03
XREF: E:\2004 Jobs\04B176\Struct\04B176S_TB.dwg
XREF: a-fp01.dwg
XREF: 04B176Sgrids.dwg

APPROVAL STAMP

IDENTIFICATION STAMP
DIVISION OF THE STATE ARCHITECT
APPL 02- 107417
AC ___ FLS ___ SS DRL
DATE: 12/21/05

NO.	ISSUED FOR	DATE
1	DSA APPROVAL SET	12/08/05

CERTIFIED BY

K M D
KAPLAN McLAUGHLIN DIAZ
ARCHITECTURE PLANNING
222 VALLEJO
SAN FRANCISCO, CA 94111
(415) 398-5191
FAX (415) 394-7158

DASSE

SOLANO COMMUNITY COLLEGE

SCCD
VALLEJO CENTER
Contract # A003.6123.01.V1

PROJECT NO. 419-201
DATE 12-08-05

MULTI-USE BLDG
FOUNDATION PLAN
AS BUILTS

S2.12

PLOT DATE:

COPYRIGHT © 2004 BY KMD (KAPLAN McLAUGHLIN DIAZ). ALL RIGHTS RESERVED.

RFI-010

RFI-046

AS SENT FOR APPV'L

DETAIL 6 2ND FLOOR WINDOW SUPPORT

DETAIL FOR CORRECT CANOPY SLOPE

RFI #277A

RFI #234

RFI #239

RFI-239

DIM. PROVIDED BY SHOP DWG

SECOND FLOOR FRAMING PLAN
CLASSROOM BLDG

1/8"=1'-0"

NORTH

FLOOR FRAMING PLAN NOTES:

1. SEE GENERAL NOTES ON SHEET S1.01.
2. SEE TYPICAL STEEL FRAMING AND METAL DECK DETAILS ON SHEETS S7.01 AND S7.02.
3. ELEVATION TO TOP OF CONCRETE (T.O.C.) IS GIVEN WITH RESPECT TO NOMINAL FIRST FLOOR ELEVATION +[0'-0"] AND SHOWN THUS: +[16'-3"].
4. TOPS OF STEEL BEAMS AND GIRDERS ARE FLUSH AND OCCUR IMMEDIATELY BELOW METAL DECK, UON. ELEVATIONS TO TOP OF STEEL (T.O.S.), WHERE GIVEN, ARE WITH RESPECT TO NOMINAL FIRST FLOOR ELEVATION +[0'-0"] AND SHOWN THUS: T.O.S. EL. [+12'-4¼"].
5. BEAMS SHALL BE EQUALLY SPACED IN BAYS UON.
6. SEE DRAWINGS OTHER THAN STRUCTURAL FOR DEPRESSIONS, CURBS, MECHANICAL, ELECTRICAL, AND SHAFT OPENINGS, ETC.
7. MARKS "DO" APPLY TO BEAM SIZES AND CONNECTIONS.
8. FOR ALL MARKS, SYMBOLS, AND OTHER DESIGNATIONS NOT NOTED SEE LEGEND ON SHEET S1.01.
9. FOR GRID LINE DIMENSIONS NOT SHOWN SEE SHEET A2.00.

APPROVAL STAMP
IDENTIFICATION STAMP
DIVISION OF THE STATE ARCHITECT
APPL 02- 107417
AC ____ FLS ____ SS ____
DATE: 12/21/05

NO.	ISSUED FOR	DATE
1	DSA APPROVAL SET	12/08/05

CERTIFIED BY

JOSEPH R. SIMPSON
No. S3105
Exp. 12-31-05
STRUCTURAL
REGISTERED PROFESSIONAL ENGINEER
STATE OF CALIFORNIA

K M D
KAPLAN McLAUGHLIN DIAZ
ARCHITECTURE PLANNING
222 VALLEJO SAN FRANCISCO, CA 94111
(415) 398-5191 FAX (415) 394-7158

DASSE
Dasse Design Inc.
Structural Engineering
San Francisco 33 New Montgomery St., Suite 250
San Mateo 1390 Market St., Suite 1048
Orange County 714.972.0483
www.dasse.com

SOLANO COMMUNITY COLLEGE

SCCD
VALLEJO CENTER
Contract # A003.6123.01.V1

PROJECT NO. 419-201
DATE 12-08-05

CLASSROOM BLDG
SECOND FLOOR
FRAMING PLAN
AS BUILTS

S2.21

COPYRIGHT © 2004 BY KMD (KAPLAN McLAUGHLIN DIAZ). ALL RIGHTS RESERVED.

PLOT DATE:

FILE: E:\2004 Jobs\04B176\St*uc*\04B176S2P1_S222.dwg07/13/05 at 0811
XREF: E:\2004 Jobs\04B176\St*uc*\04B176S_TB.dwg
XREF: 04B176sgnds.dwg
XREF: a-fp02.dwg

Copy sent by e-mail to: Ace Iron & East Bay Drywall on 8/3/06

Ralph Larsen & Son, Inc.
General Contractors License No. 185041
302 6th Avenue
San Mateo, CA 94401-4221
Phone: (650) 579-0330
Fax: (650) 579-0349

Request for Information 067

Detailed, RFIs Grouped by RFI Number

Subject: Need work points for support connections
Discipline:
Category:

Cc: Company Name | Contact Name | Copies | Notes

Question — Date Required: 8/8/2006

Review attached RFI-0 from ACE IRON. Also review detail 1/A8.02). The location for the short GLU LAM BEAM is not clear to us.
1. Is the intent to have the GLU LAM 5/8" behind the exterior wall studs (similar to the bent plate addressed in RFI-042) in order to allow the parapet studs to pass vertically as shown in detail 4a/S8.02?
2 Will you provide a structural section view showing the location of this GLU LAM, the exterior metal studs, and the connection needed between the vertical studs and the structure(similar to 4a/S8.02)?

Suggestion

Answer — Date Answered:

1. Yes.
2. SEE 4/S8.02

Chihhung Chang DASSE 8.02.2006

B- SECTION

Printed on: 7/27/2006 RALPH Page 1

DISREGARD DIMENSION INFO. FOR THESE BEAMS PROVIDED BY SEOR IN SHOP DWG. REVIEW
FD/KMD

DASSE — Dasse Design Inc. STRUCTURAL ENGINEERS — San Francisco, Oakland

PROJECT
Job No. By
Date Page

RFI-067

A RFI-067

RFI #150

FROM DWG S7.04
2 LOBBY BEAM CONNECTION
C/A BUILDING MODIFIED

RFI #155

ROOF FRAMING
SECTION VIEW AT RADIUS WALL

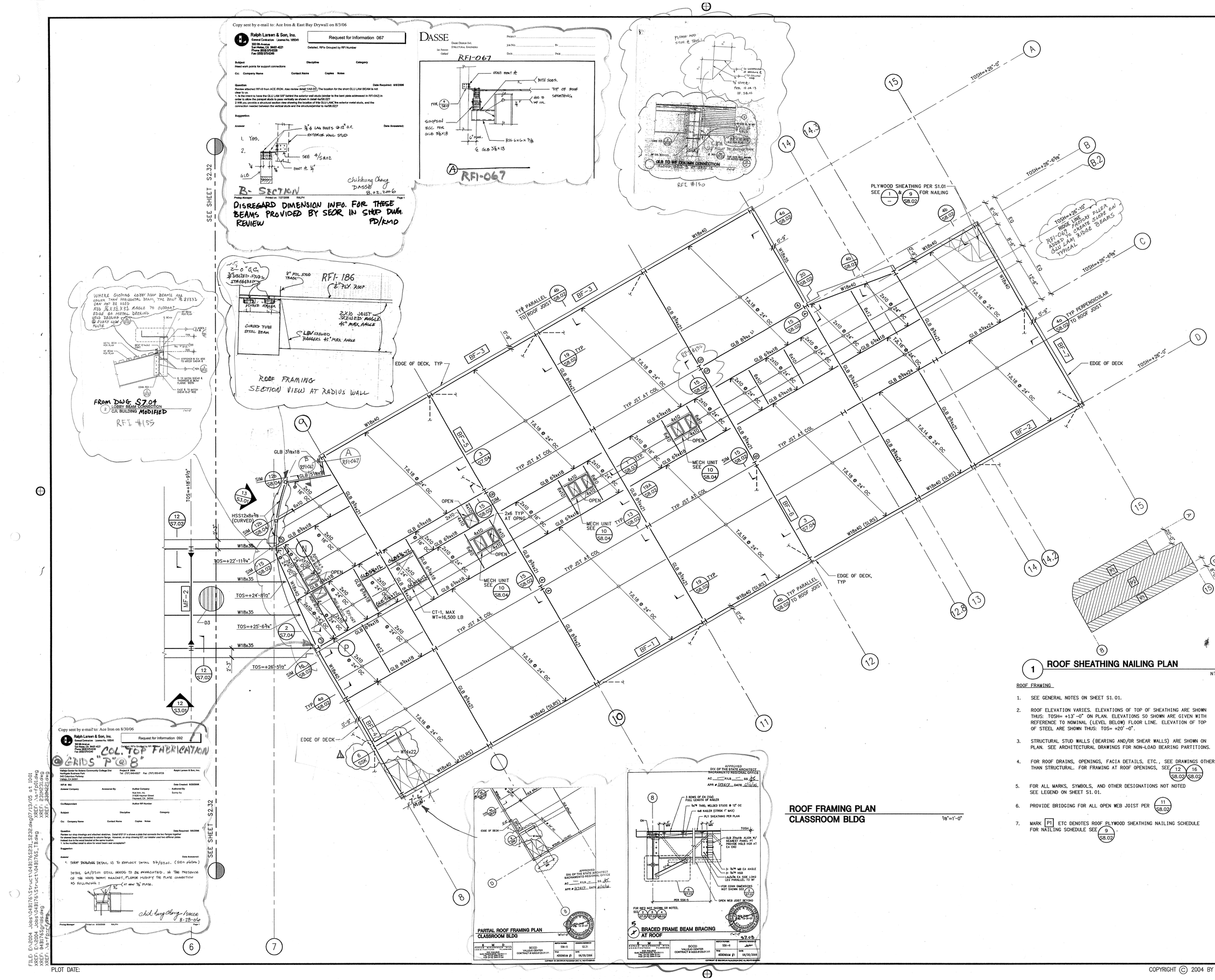

1 ROOF SHEATHING NAILING PLAN

NTS

ROOF FRAMING

1. SEE GENERAL NOTES ON SHEET S1.01.
2. ROOF ELEVATION VARIES. ELEVATIONS OF TOP OF SHEATHING ARE SHOWN THUS: TOSH= +13'-0" ON PLAN. ELEVATIONS SO SHOWN ARE GIVEN WITH REFERENCE TO NOMINAL (LEVEL BELOW) FLOOR LINE. ELEVATION OF TOP OF STEEL ARE SHOWN THUS: TOS= +20'-0".
3. STRUCTURAL STUD WALLS (BEARING AND/OR SHEAR WALLS) ARE SHOWN ON PLAN. SEE ARCHITECTURAL DRAWINGS FOR NON-LOAD BEARING PARTITIONS.
4. FOR ROOF DRAINS, OPENINGS, FACIA DETAILS, ETC., SEE DRAWINGS OTHER THAN STRUCTURAL. FOR FRAMING AT ROOF OPENINGS, SEE 12/S8.02 16/S8.02
5. FOR ALL MARKS, SYMBOLS, AND OTHER DESIGNATIONS NOT NOTED SEE LEGEND ON SHEET S1.01.
6. PROVIDE BRIDGING FOR ALL OPEN WEB JOIST PER 11/S8.02
7. MARK P1 ETC DENOTES ROOF PLYWOOD SHEATHING NAILING SCHEDULE FOR NAILING SCHEDULE SEE 9/S8.02.

ROOF FRAMING PLAN
CLASSROOM BLDG

1/8"=1'-0"

Copy sent by e-mail to: Ace Iron on 8/30/06

Ralph Larsen & Son, Inc.
General Contractors License No. 185041

Request for Information 092

COL. TOP FABRICATION @ GRIDS "P"@"8"

Valley Center for Solano Community College Dist — Project # 3944 — Tel: (707) 864-8327 — Fax: (707) 553-9728 — Ralph Larsen & Son, Inc.
Northgate Business Park
245 Cinquina Parkway
Vallejo, CA 94591

RFI #: 092 — Date Created: 8/30/2006

Answered Company | Answered By | Author Company: Ace Iron, Inc. 31928 Hayman Street Hayward, Ca. 94544 | Author: Sunny Au | Authored By

Co-Respondent | Author RFI Number

Subject | Discipline | Category

Cc: Company Name | Contact Name | Copies | Notes

Question — Date Required: 9/6/2006

Review our shop drawings and attached sketches. Detail 6/S7.01 s shows a plate that connects the two flanges together for skewed beam that connected to column flange. However, on shop drawing 6/27, our detailer used two stiffener plates that connected to the web and bracket at the same location.
1. Is the modified detail is done for wood beam ceel acceptable?

Suggestion

Answer — Date Answered:

1. SHOP DRAWING DETAIL IS TO REFLECT DETAIL 6A/S7.01. (SEE SKETCH)

DETAIL 6A/S7.01 STILL NEEDS TO BE EXECUTED. IN THE PRESENCE OF THE WOOD BEAM BRACKET, PLEASE MODIFY THE PLATE CONNECTION AS FOLLOWING:

chi-hung Chang - DASSE 8-29-06

Printed on: 8/30/2006 RALPH Page 1

PARTIAL ROOF FRAMING PLAN
CLASSROOM BLDG
1/4"=1'-0"

BRACED FRAME BEAM BRACING AT ROOF

APPROVAL STAMP
IDENTIFICATION STAMP
DIVISION OF THE STATE ARCHITECT
APPL 02- 107417
AC ____ FLS ____ SS NC
DATE: 12/21/05

NO.	ISSUED FOR	DATE
1	DSA APPROVAL SET	12/08/05

CERTIFIED BY
REGISTERED PROFESSIONAL ENGINEER JOSEPH R. SUTTON NO. 21455 Exp. 12-31-05 STRUCTURAL STATE OF CALIFORNIA

K M D
KAPLAN McLAUGHLIN DIAZ
ARCHITECTURE PLANNING
222 VALLEJO SAN FRANCISCO, CA 94111
(415) 398-5191 FAX (415) 394-7158

DASSE — Dasse Design Inc. Structural Engineers — San Francisco, Oakland, Walnut Creek, Santa Rosa, Los Angeles, Orange County, Sacramento, Portland, Seattle

SOLANO COMMUNITY COLLEGE

SCCD
VALLEJO CENTER
Contract # A003.6123.01.V1

PROJECT NO. 419-201 | DATE 12-08-05

CLASSROOM BLDG AND LOBBY ROOF FRAMING PLAN
AS BUILTS

S2.31

FILE: E:\2004 Jobs\04B176\Structural\04B176S2SL_S2S2.dwg 07/19/05 s.t 1001
XREF: E:\2004 Jobs\04B176\Structural\04B176S_Ttl.dwg
XREF: E:\2004 Jobs\04B176\Structural\04B176S_T1.dwg
XREF: 04B176Sgrids.dwg
XREF: E:\a-rfi\rfi_0.dwg
XREF: E:\a-rfi\rfi_23MC31.dwg
XREF: E:\a-rfi\rfi_23MC22.dwg

PLOT DATE:

COPYRIGHT © 2004 BY KMD (KAPLAN McLAUGHLIN DIAZ). ALL RIGHTS RESERVED.

Copy sent by e-mail to: Ace Iron on 8/31/06

Ralph Larsen & Son, Inc.
General Contractors License No. 189341
320 8th Avenue
San Mateo, CA 94401-4221
Phone: (650)579-6339
Fax: (650)579-6349

Request for Information 091
Detailed, RFIs Grouped by RFI Number

Vallejo Center for Solano Community College Dist
Northgate Business Park
545 Columbus Parkway
Vallejo, CA 94591

Project # 2004
Tel: (707) 649-8327 Fax: (707) 553-9728

Ralph Larsen & Son, Inc.

RFI #: 091
Date Created: 8/29/2006

Answer Company | Answered By | Author Company | Authored By
Ralph Larsen & Son, Inc | Jay Tucker

Co-Respondent | Author RFI Number

Subject | Discipline | Category
Changes by SHOP drawing will require new detail

Cc: Company Name | Contact Name | Copies | Notes

Question | Date Required: 9/6/2006
Review the attached sketches taken from the APPROVED SHOP DRAWING DS3 and portions of the Contract Drawings.
The Design team revised the vertical height of the (HSS7X4X3/8) tube steel located near GRID intersections 2 & L. This CHANGE in height does not allow the top of this tube to be connected per the required by detail 4/S7.04. We are unclear as to why this height change was directed.
1. How do you want us to connect the top of this (now too short) tube steel post?

Suggestion

Answer | Date Answered:

See attached documents for reply.

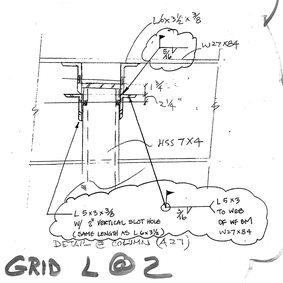

GRID L @ 2

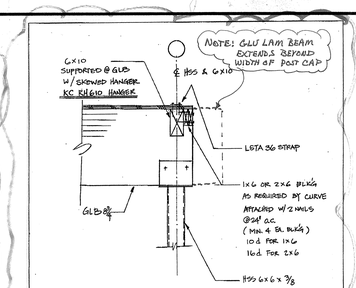

APPROVED
DIV. OF THE STATE ARCHITECT
SACRAMENTO REGIONAL OFFICE
AC ____ FLS ____ SS 107417
APPL # 02-107417
DATE 9/14/06

STRUCTURAL OPTION — JOSEPH R. SUTTON — No. 21455 — Exp. 12-31-06 — REGISTERED PROFESSIONAL ENGINEER — STATE OF CALIFORNIA

12. (S7.04) Support Detail between HSS, GLB & 6x10
Multi-Use Building RFI-066
DSA APPL NO. 02-107417

K M D KAPLAN McLAUGHLIN DIAZ ARCHITECTURE PLANNING 222 VALLEJO SAN FRANCISCO, CA 94111 TEL (415)398-5191 FAX (415) 394-7158	SCCD VALLEJO CENTER CONTRACT # A003.6123.01.V1	SHEET NUMBER SSK – 12	DRAWING REFERENCE 16/S8.04
		TITLE	DATE 08/01/2006

RFI-066

Ralph Larsen & Son, Inc.
General Contractors License No. 189341
320 8th Avenue
San Mateo, CA 94401-4221
Phone: (650)579-6339
Fax: (650)579-6349

Request for Information 104
Detailed, RFIs Grouped by RFI Number

Vallejo Center for Solano Community College Dist
Northgate Business Park
545 Columbus Parkway
Vallejo, CA 94591

Project # 2004
Tel: (707) 649-8327 Fax: (707) 553-9728

Ralph Larsen & Son, Inc.

RFI #: 104
Date Created: 8/30/2006

Answer Company | Answered By | Author Company | Authored By
Ralph Larsen & Son, Inc. 300 8th Avenue San Mateo, CA 94401 | Jay Tucker

Co-Respondent | Author RFI Number

Subject | Discipline | Category
Need hanger type for 4X10 at 6x6 post.

Cc: Company Name | Contact Name | Copies | Notes

Question | Date Required: 9/11/2006
Review attached sketch showing location of 6X6 post near the intersection of GRIDS G and 2A. This post must extend up to allow connection of the 2 11/16 x 9 1/4 PSL per detail 16/S8.03. This same 6X6 post is aligned with the 4X10 header attached to the inside face of studs along GRID LINE 2A. The header schedule on drawing S8.03 requires the use of TOP FLANGE HANGERS for 4X10 headers (HJA410TF). As you can see by the sketch a TOP FLANGE header will not work for supporting this 4X10 header at this post unless we cut the post off too short for support of the 2 1/4" X 9 1/4" PSL beam shown in detail 16/S8.03.
1. Can we use an HUC410 hanger to connect the 4X10 header at this 6X6 post?

Suggestion

Answer | Date Answered:

1. PROPOSED HUC 410 IS ACCEPTABLE. FILL ALL ROUND & TRIANGLE HOLES WITH NAILS.
Chick-hung Cheng
DASSE
8-30-06

Printed on: 8/30/2006 RALPH Page 1

1A

ROOF FRAMING

1. SEE GENERAL NOTES ON SHEET S 1.01.
2. ROOF ELEVATION VARIES. ELEVATIONS OF TOP OF SHEATHING ARE SHOWN THUS: TOSH= +13'-0" ON PLAN. ELEVATION OF TOP OF STEEL ARE SHOWN THUS: TOS= +20'-0". ELEVATIONS SO SHOWN ARE GIVEN WITH REFERENCE TO NOMINAL (LEVEL BELOW) FLOOR LINE.
3. STRUCTURAL STUD WALLS (BEARING AND/OR SHEAR WALLS) ARE SHOWN ON PLAN. SEE ARCHITECTURAL DRAWINGS FOR NON-LOAD BEARING PARTITIONS.
4. FOR ROOF DRAINS, OPENINGS, FACIA DETAILS, ETC., SEE DRAWINGS OTHER THAN STRUCTURAL. FOR FRAMING AT ROOF OPENINGS, SEE 12/S8.02 16/S8.02
5. FOR ALL MARKS, SYMBOLS, AND OTHER DESIGNATIONS NOT NOTED SEE LEGEND ON SHEET S1.01.

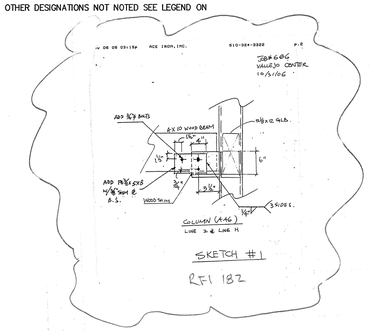

SKETCH #1
RFI 182

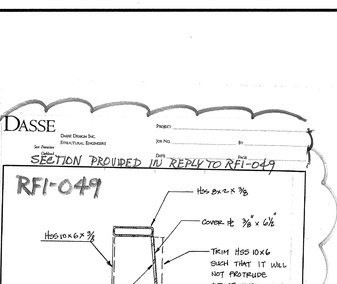

RFI-100A

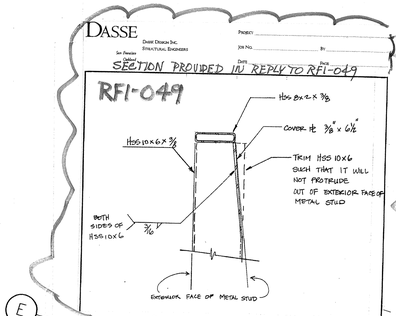

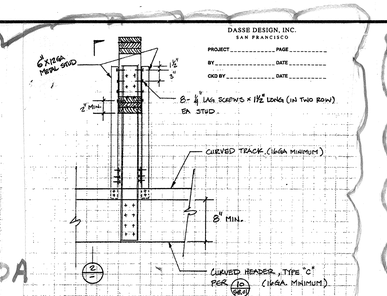

RFI-100A

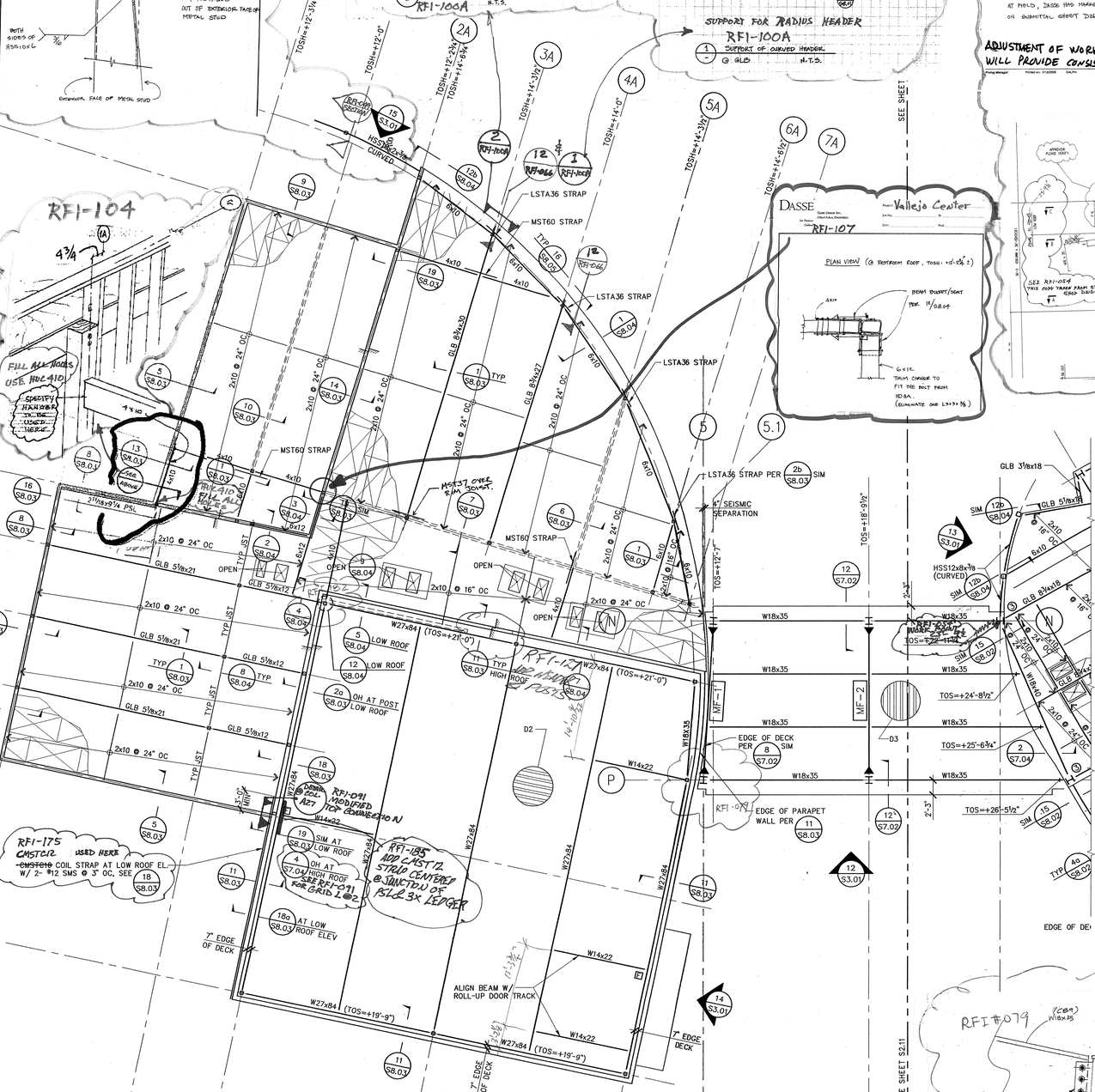

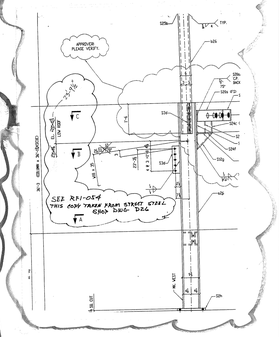

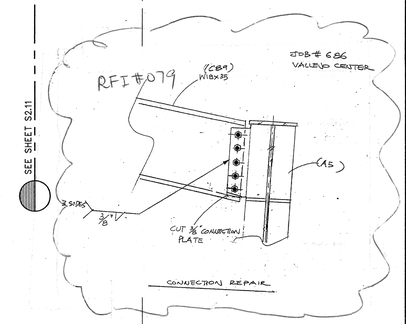

Copy sent by e-mail to ACE IRON INC. 7-18-06

Ralph Larsen & Son, Inc.
General Contractors License No. 189341
320 8th Avenue
San Mateo, CA 94401-4221
Phone: (650)579-6339
Fax: (650)579-6349

Request for Information 054
Detailed, RFIs Grouped by RFI Number

Vallejo Center for Solano Comm. Coll. Dist.
Northgate Business Park
545 Columbus Parkway
Vallejo, CA 94591

Project # 2004
Tel: (707) 649-8327 Fax: (707) 553-9728

Ralph Larsen & Son, Inc.

RFI #: 054
Date Created: 7/13/2006

Answer Company | Answered By | Author Company | Authored By
Ralph Larsen & Son, Inc. 300 8th Avenue San Mateo, CA 94401 | Jay Tucker

Co-Respondent | Author RFI Number

Subject | Discipline | Category
Given elevation do not provide consistent slope

Cc: Company Name | Contact Name | Copies | Notes

Question | Date Required: 7/25/2006
Review attached sketches prepared by ACE IRON. The gross top of steel elevations do not provide a consistent slope for lobby roof structure along GRID LINE N.
1. Have we misinterpreted the TOS information on drawing S2.32?
2. Are any changes required to the given TOS elevations for the steel along GRID LINE P?

Suggestion

Answer | Date Answered:

1 & 2. TOP OF STEEL ELEVATIONS HAVE BEEN MISINTERPRETED @ TWO LOCATIONS. HOWEVER, RAISED 01 WHEN IS INSTALLED AT FIELD, DASSE HAS MARKED UP WORKING POINT ELEVATION ON SUBMITTAL SHEET D2& 3 FOR. (AFFECTING LINE N ONLY)
Chick-hung Cheng
DASSE
ADJUSTMENT OF WORKING PT. ELEVATION WILL PROVIDE CONSISTENT SLOPE.

Printed on: 7/18/2006 RALPH Page 1

PD/KMD 419-201 7/18/06

NOTE: MARKED UP WORK POINT ON STRUCT. SHOP DWGS DID NOT ACHIEVE CONSISTANT SLOPE SEE RFI-054 WE WERE DIRECTED TO MODIFY EDGE OF ROOF FLASHING TO MITIGATE SLOPE APPEARANCE

APPROVAL STAMP
IDENTIFICATION STAMP
DIVISION OF THE STATE ARCHITECT
APPL 02- 107417
AC ____ FLS ____ SS ____
DATE: 12/21/05

NO.	ISSUED FOR	DATE
1	DSA APPROVAL SET	12/08/05

CERTIFIED BY

STRUCTURAL OPTION — JOSEPH R. SUTTON — No. 21455 — Exp. 12-31-05 — REGISTERED PROFESSIONAL ENGINEER — STATE OF CALIFORNIA

K M D
KAPLAN McLAUGHLIN DIAZ
ARCHITECTURE PLANNING
222 VALLEJO SAN FRANCISCO, CA 94111
(415) 398-5191 FAX (415) 394-7158

DASSE
Dasse Design Inc. Structural Engineers
San Francisco 33 New Montgomery Fl. 7th
Oakland Suite 650
San Diego San Francisco Call Survey
Orange County 714-505-4903
www.dasse.com

SOLANO COMMUNITY COLLEGE

SCCD
VALLEJO CENTER
Contract # A003:6123.01.V1

PROJECT NO.	DATE
419-201	12-08-05

MULTI-USE BLDG
ROOF FRAMING PLAN
AS BUILTS

S2.32

ROOF FRAMING PLAN
MULTI-USE BLDG AND LOBBY 1/8"=1'-0"

PLOT DATE:

COPYRIGHT © 2004 BY KMD (KAPLAN McLAUGHLIN DIAZ). ALL RIGHTS RESERVED.

FILE: E:\2004 Jobs\04B176\Struct\04B176S231dwg09/23/04 at 13:31
XREF: E:\2004 Jobs\04B176\Struct\04B176S2.1base.dwg
XREF: 04B176Sgrids.dwg
XREF: d-rp01.dwg

Copy sent by e-mail to: Ace Iron, East Bay Drywall on 9-1-06

Ralph Larsen & Son, Inc.
General Contractors License No. 199341
300 8th Avenue
San Mateo, CA 94401-4221
Phone: (650) 579-0330
Fax: (650) 579-0340

Request for Information 103

Detailed, RFIs Grouped by RFI Number

Vallejo Center for Solano Community College Dist
Northgate Business Park
545 Columbus Parkway
Vallejo, CA 94591

Project # 2004
Tel: (707) 649-8327 Fax: (707) 553-9728

Ralph Larsen & Son, Inc.

RFI #: 103 — Date Created: 8/30/2006

Answer Company — Answered By — Author Company: Ralph Larsen & Son, Inc., 300 8th Avenue, San Mateo, CA 94401 — Authored By: Jay Tucker

Co-Respondent — Author RFI Number

Subject: Tube post located in center of 8 inch wall header needs to be at face of studs — Discipline — Category

Cc: Company Name — Contact Name — Copies — Notes

Question — Date Required: 9/11/2006

Review RFI-053 and RFI-063. Review the attached RFI-04 by ACE IRON. The several changes required by reply to our RFI'S eluded some confusion regarding location of the anchor bolts and steel members. The 6X6 tube steel base plates and anchor bolts were set per the reviewed and corrections made on our shop drawings. The connection points approved by shop drawing review (for these tube post) have the 6x6 post located in the center of the wall. The quickest solution to this issue would be to allow the header to be welded to the post offset.
1. Can the horizontal header be welded to the 6x6 post similar to the offset method being used by INFORMATION BULLETIN #5?

Suggestion

Answer — Date Answered:

1. IT IS STRUCTURALLY ACCEPTABLE.
Chih-Kung Chang / DASSE DESIGN
8-30-06

JOB #656
VALLEJO CENTER
8/30/06

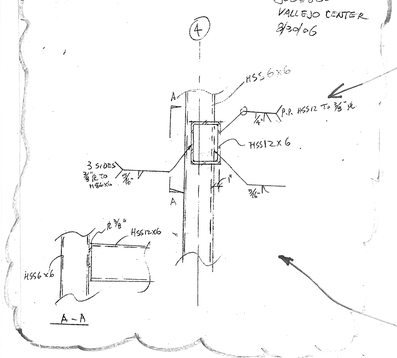

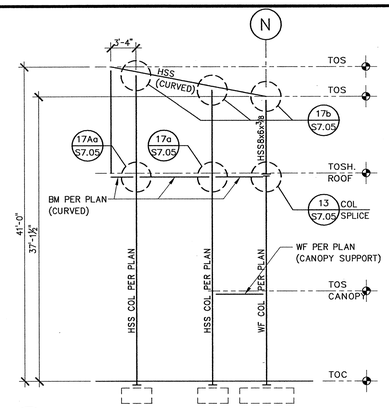

13 ELEVATION AT STAIR #1

1/8"=1'-0"

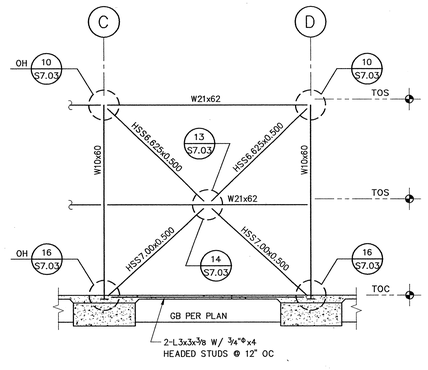

9 BRACED FRAME ELEVATION

BF-7

1/8"=1'-0"

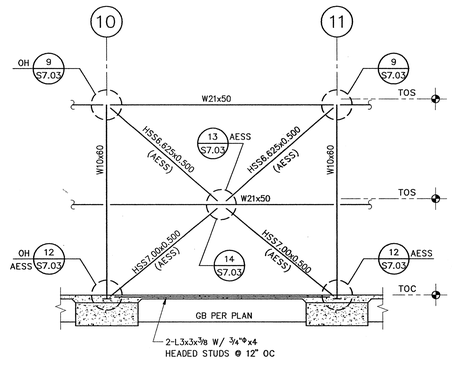

5 BRACED FRAME ELEVATION

BF-1

1/8"=1'-0"

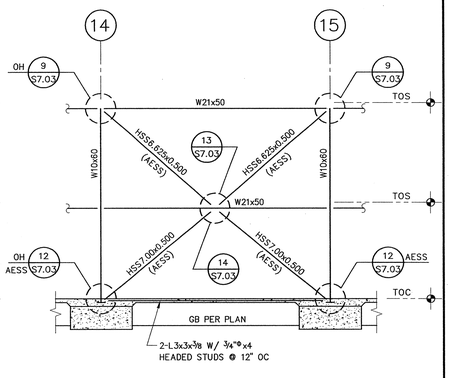

1 BRACED FRAME ELEVATION

BF-2

1/8"=1'-0"

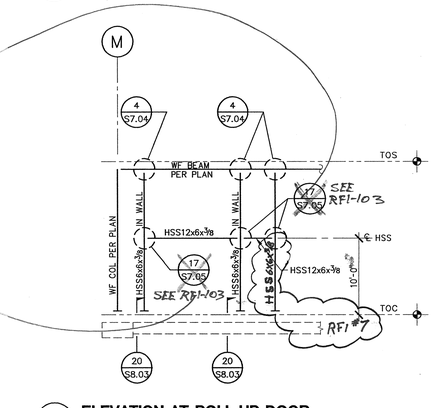

14 ELEVATION AT ROLL-UP DOOR

1/8"=1'-0"

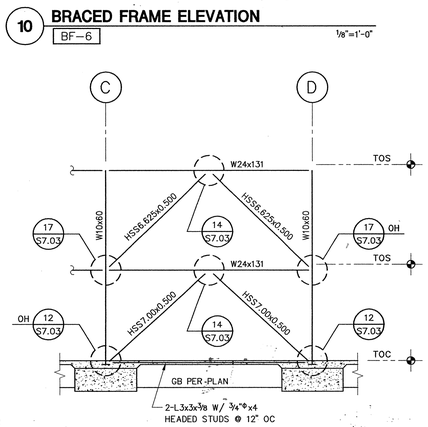

10 BRACED FRAME ELEVATION

BF-6

1/8"=1'-0"

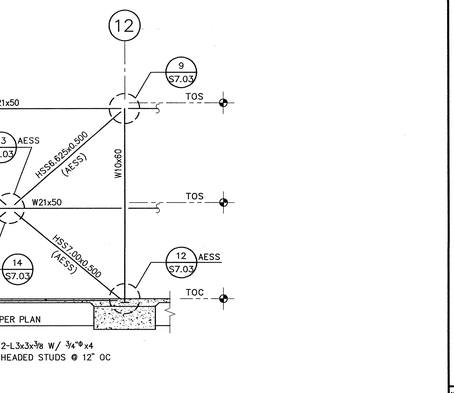

6 BRACED FRAME ELEVATION

BF-3

1/8"=1'-0"

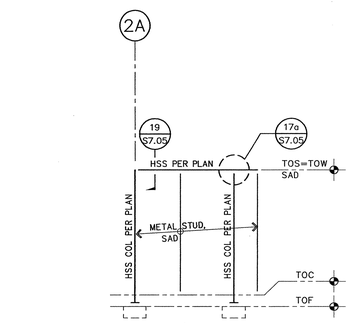

15 FREE STANDING WALL

1/8"=1'-0"

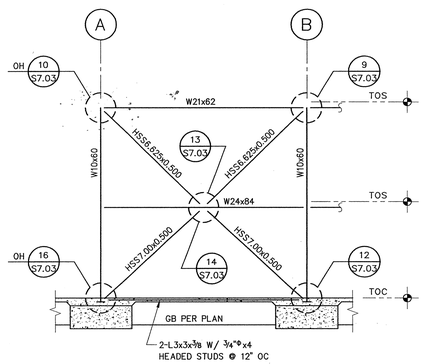

11 BRACED FRAME ELEVATION

BF-4

1/8"=1'-0"

3 BRACED FRAME ELEVATION

BF-5

1/8"=1'-0"

12 FRAMING ELEVATION GRID LINE (P)

1/8"=1'-0"

8 MOMENT FRAME ELEVATION

MF-1

1/8"=1'-0"

4 MOMENT FRAME ELEVATION

MF-2

1/8"=1'-0"

APPROVAL STAMP
IDENTIFICATION STAMP
DIVISION OF THE STATE ARCHITECT
APPL 02- 107417
AC ____ FLS ____ SS NL
DATE: 12/21/05

NO.	ISSUED FOR	DATE
1	DSA APPROVAL SET	12/08/05

REGISTERED PROFESSIONAL ENGINEER — JOSEPH R. SITTON — No. 21155 — Exp. 12-31-05 — STRUCTURAL — STATE OF CALIFORNIA

CERTIFIED BY

K M D
KAPLAN McLAUGHLIN DIAZ
ARCHITECTURE PLANNING
222 VALLEJO SAN FRANCISCO, CA 94111
(415) 398-5191 FAX (415) 394-7158

DASSE

SOLANO COMMUNITY COLLEGE

SCCD
VALLEJO CENTER
Contract # A003.6123.01.V1

PROJECT NO. 419-201 | DATE 12-08-05

BRACED FRAME ELEVATIONS
AS BUILTS

S3.01

FILE: E:\2004 Jobs\04B176\Struct\04B176S301.dwg07/12/05 at 11:59
XREF: \04B176S_TB.dwg

PLOT DATE:

COPYRIGHT © 2004 BY KMD (KAPLAN McLAUGHLIN DIAZ). ALL RIGHTS RESERVED.

EXPANSION BOLTS IN NORMAL WEIGHT CONCRETE		f'_c = 3000 PSI MIN	
DIAMETER	MINIMUM EMBED.	TENSION TEST VALUE	TORQUE TEST VALUE
¼"	2"	1070 LBS	7 FT-LBS
⅜"	2½"	2280 LBS	25 FT-LBS
½"	3½"	3276 LBS	45 FT-LBS
⅝"	4"	4488 LBS	95 FT-LBS
¾"	4¾"	6330 LBS	225 FT-LBS
1"	6"	8496 LBS	325 FT-LBS

EXPANSION BOLTS IN CONCRETE OVER METAL DECK		f'_c = 3000 PSI MIN	
DIAMETER	MINIMUM TOTAL EMBED.	TENSION TEST VALUE	TORQUE TEST VALUE
¼"	2"	990 LBS	25 FT-LBS
⅜"	2½"	1652 LBS	25 FT-LBS
½"	3½"	2560 LBS	55 FT-LBS
⅝"	4"	3553 LBS	90 FT-LBS

1. TYPICAL EXPANSION BOLTS ARE CARBON STEEL HILTI KWIK-BOLTS 3 AND SHALL COMPLY WITH ICC REPORT ESR 1385. THE LOADS AS TABULATED CORRESPOND TO 80% OF THE ICC ALLOWABLES. INCREASE FOR COMBINATION WITH WIND OR SEISMIC FORCES IS ALLOWED IN ACCORDANCE WITH THE 2001 CBC. SPECIAL INSPECTION OF EXPANSION BOLTS IS REQUIRED. TABULATED VALUES ARE FOR SHALLOW ANCHORS. ANCHORS SHALL BE USED IN NON-STRUCTURAL APPLICATION (E.G., ANCHORING OF ARCHITECTURAL AND MECHANICAL ELEMENTS, ANCHORING OF STAIRS AND ELEVATORS).
2. INSTALLATION: INSTALL EXPANSION BOLTS IN ACCORDANCE WITH THE REQUIREMENTS GIVEN IN ICC RESEARCH COMMITTEE RECOMMENDATIONS FOR THE SPECIFIC EXPANSION BOLT.
3. FIELD TESTING: TENSION TEST DRILLED IN ANCHORAGE TO VALUES TABULATED ABOVE WITH SPECIAL INSPECTION, OR TORQUE TEST TO VALUES AS TABULATED ABOVE. TESTS SHALL BE MADE IN THE PRESENCE OF THE OWNER'S PROJECT REPRESENTATIVE. TEST 50% OF EACH DIAMETER GROUP OF EXPANSION BOLTS. IF ANY ANCHOR FAILS TESTING, TEST ALL ANCHORS OF THE SAME CATEGORY NOT PREVIOUSLY TESTED UNTIL 20 CONSECUTIVE PASS. TESTING SHOULD OCCUR 24 HOURS MINIMUM AFTER INSTALLATION OF THE SUBJECT ANCHORS. ALL ANCHORS INSTALLED THAT DAY SHALL BE TESTED, AND ALL COSTS OF SUCH TESTS AND INSPECTIONS SHALL BE DEDUCTED FROM THE CONTRACT SUM.
4. TENSION TESTS: APPLY TEST LOADS TO EXPANSION BOLTS WITHOUT REMOVING THE NUT, IF POSSIBLE. IF NOT, REMOVE NUT AND INSTALL A THREADED COUPLER TO THE SAME TIGHTNESS OF THE ORIGINAL NUT USING A TORQUE WRENCH AND APPLY LOAD. REACTION LOADS FROM TEST FIXTURES MAY BE APPLIED IN CLOSE PROXIMITY TO THE ANCHOR BEING TESTED, PROVIDED THE BOLT IS NOT RESTRAINED FROM WITHDRAWING BY THE FIXTURE. TEST EQUIPMENT IS TO BE CALIBRATED BY AN APPROVED TESTING LABORATORY IN ACCORDANCE WITH STANDARD RECOGNIZED PROCEDURES. BOLTS SHOULD HAVE NO OBSERVABLE MOVEMENT AT THE TEST LOAD TO BE ACCEPTABLE (OBSERVABLE MOVEMENT IS DEFINED AS THE WASHER UNDER THE NUT BECOMING LOOSE).
5. TORQUE WRENCH TEST: THE APPLICABLE TEST TORQUE MUST BE REACHED WITHIN ONE-HALF (½) TURN OF THE NUT.
6. EXPANSION ANCHORS INSTALLED FROM THE UNDERSIDE OF METAL DECK SHALL BE LOCATED IN THE CENTER OF THE LOW FLUTE. THE MINIMUM EMBEDMENT SHALL BE 1½" ABOVE THE TOP FLUTE OF THE DECK (EXCEPT ¾" DIAMETER ANCHORS FOR CEILINGS). THE EFFECTIVE EMBEDMENT DEPTH SHALL BE ⅓ OF THE METAL DECK HEIGHT PLUS THE 1½" MINIMUM NOTED ABOVE.

18 EXPANSION ANCHORS

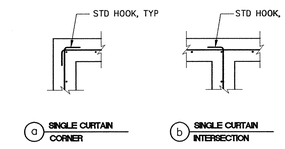

NOTES:
1) AT INTERSECTING FTG PLACE T&B BARS OF NORTH/SOUTH FTG ABOVE T&B BARS OF EAST/WEST FTG.
2) AT INTERSECTING GB PLACE T&B BARS OF GB1 ABOVE T&B BARS OF GB2.

19 CONCRETE WALL/FTG/GB INTERSECTIONS

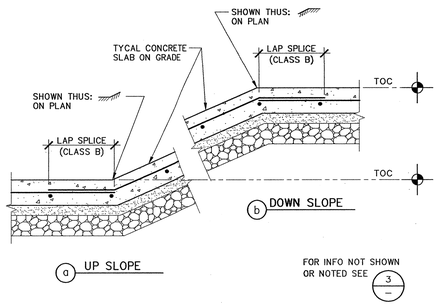

20 SLOPED SLAB

1"=1'-0"

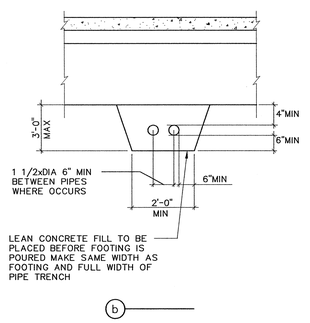

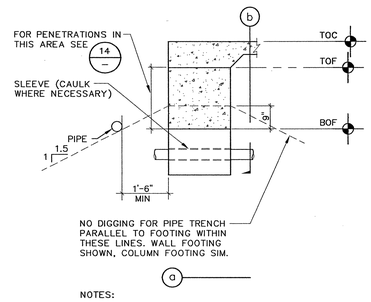

NOTES:
1. PROVIDE 1" GAP BETWEEN SLEEVE & PIPE/CONDUIT.
2. MAX SLEEVE SIZE 12", UON
3. CONTRACTOR SHALL BE RESPONSIBLE FOR SHORING AND SHEATHING OR OTHERWISE MAINTAINING THE SIDES OF THE EXCAVATION FROM CAVE-IN UNTIL ALL BACKFILL IS COMPLETED.

13 PIPE CLEARANCES AT FOOTING AND GRADE BEAM

1/2"=1'-0"

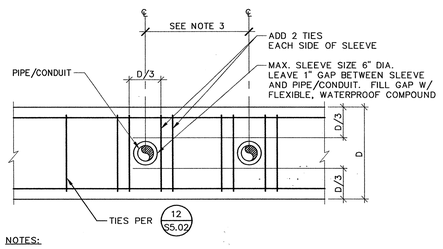

NOTES:
1. DO NOT CUT REINFORCING.
2. SLEEVE TO BE PLACED IN MIDDLE THIRD OF BEAM DEPTH WHEREVER POSSIBLE. FOR WASTE LINES THAT CANNOT MEET THIS REQUIREMENT AND PROVIDE PROPER FLOW SEE 15
3. MINIMUM DISTANCE BETWEEN SLEEVES SHALL BE 4X LARGEST SLEEVE DIAMETER.
4. PROVIDE MIN. 2" CLR BETWEEN SLEEVE AND REINFORCING.

14 PIPE / CONDUIT THROUGH GRADE BEAM / FOOTING

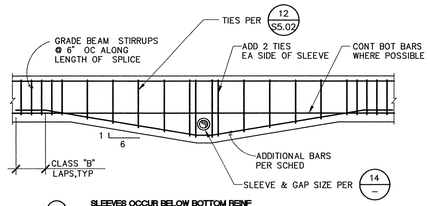

NOTES:
1. FOR INFO NOT SHOWN OR NOTED SEE 14
2. FOR PIPES BELOW GRADE BEAM/FOOTING, SEE 13

15 WASTE LINE PIPE THROUGH BOTTOM THIRD GRADE BEAM / FOOTING

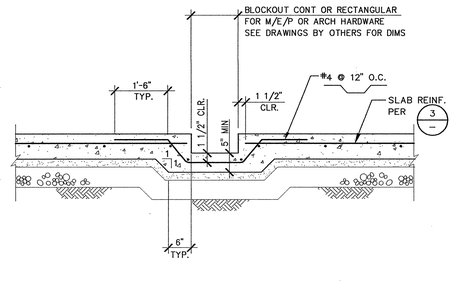

16 BLOCKOUT IN SLAB ON GRADE

1"=1'-0"

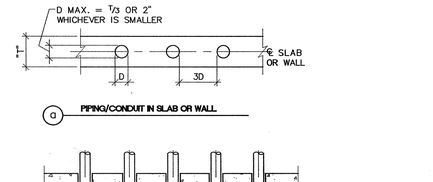

NOTE:
1. IF 4" MINIMUM CLEAR DISTANCE BETWEEN SLEEVES IS NOT POSSIBLE, THIS CONDITION SHALL BE TREATED AS SINGLE, LARGER SLAB OPENING.

10 PIPING / CONDUIT IN OR THROUGH SLAB OR WALL

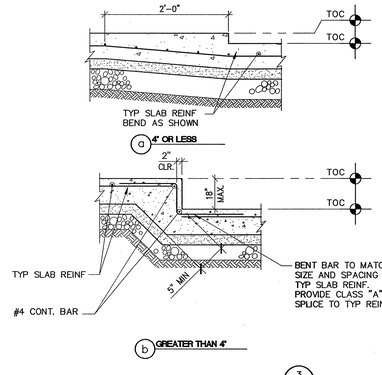

FOR INFO NOT SHOWN OR NOTED SEE 3

11 SLAB-ON-GRADE DEPRESSION

1"=1'-0"

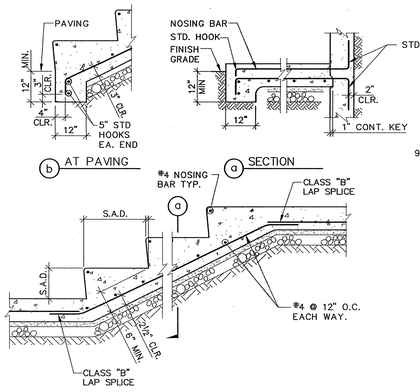

12 STAIR-ON-GRADE

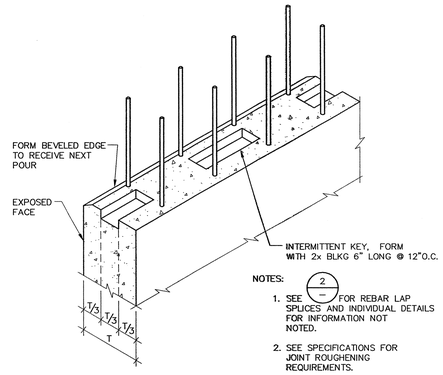

NOTES:
1. SEE 2 FOR REBAR LAP SPLICES AND INDIVIDUAL DETAILS FOR INFORMATION NOT NOTED.
2. SEE SPECIFICATIONS FOR JOINT ROUGHENING REQUIREMENTS.

5 HORIZONTAL CONSTRUCTION JOINT

NTS

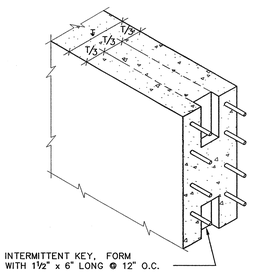

NOTES:
1. SEE 2 FOR REBAR LAP SPLICES AND INDIVIDUAL DETAILS FOR INFORMATION NOT NOTED.
2. SEE SPECIFICATIONS FOR JOINT ROUGHENING REQUIREMENTS.

6 VERTICAL CONSTRUCTION JOINT

IN CONCRETE WALL

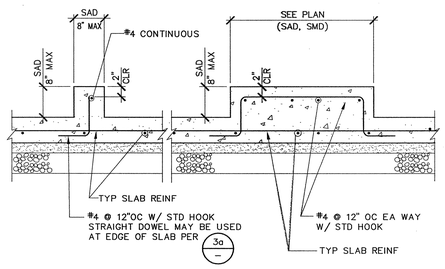

FOR INFO NOT SHOWN OR NOTED SEE 3

7 TYPICAL CURB AND PAD

1"=1'-0"

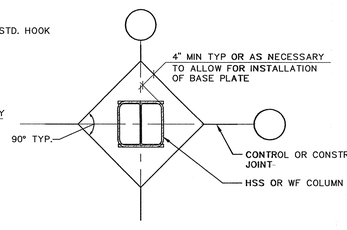

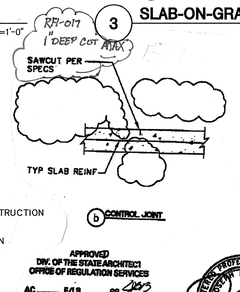

APPROVED
DIV. OF THE STATE ARCHITECT
OFFICE OF REGULATION SERVICES
AC F/LS SS
APPL NO 02-107417 DATE 6/9/06

NOTES:
1. JOINTS SHALL NOT BE LOCATED FURTHER THAN 10'-0" OC. LOCATE EITHER CONTROL OR CONSTRUCTION JOINTS TO ENCLOSE APPROX AREAS NOT EXCEEDING 100 SQ FT. ADDITIONALLY ASPECT RATIO SHALL NOT EXCEED 1.5. SUBMIT LAYOUT FOR APPROVAL. LOCATE UNDER PARTITION WHEREVER POSSIBLE.
2. LOCATE GREASED DOWELS 1'-6" FROM CONSTRUCTION AND CONTROL JOINT INTERSECTIONS. GREASE ONE SIDE OF GREASED DOWEL.
3. COORDINATE CONSTRUCTION & CONTROL JOINT LOCATION WITH STAINED CONCRETE PATTERNS AS SHOWN ON SHEETS A9.01, A9.02, A9.03, A9.04, AND A9.05

8 SLAB-ON-GRADE CONSTRUCTION AND CONTROL JOINTS

RFI-017

	MAIN REINFORCEMENT			STIRRUPS & TIES		
	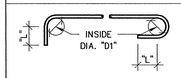			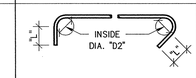		
	90° HOOK	180° HOOK		90° HOOK	135° HOOK	
BAR SIZE	90° HOOK LENGTH "L"	INSIDE DIA. "D1"	180° HOOK LENGTH "L"	90° HOOK LENGTH "L"	INSIDE DIA. "D2"	135° HOOK LENGTH "L"
#3	4½"	2¼"	2½"	3"	1½"	3"
#4	6"	3"	2½"	3"	2"	3"
#5	7½"	3¾"	2½"	3¾"	2½"	3¾"
#6	9"	4½"	3"	9"	4½"	4½"
#7	10½"	5¼"	3½"	10½"	5¼"	5¼"
#8	1'-0"	6"	4"	1'-0"	6"	6"
#9	1'-1½"	9½"	4½"	-	-	-
#10	1'-3¼"	10¾"	5¼"	-	-	-
#11	1'-5"	1'-0"	5¾"	-	-	-

1 STANDARD HOOKS

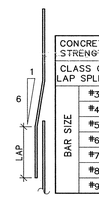

CONCRETE STRENGTH		f'_c = 3,000 PSI	
CLASS OF LAP SPLICE		CLASS "A"	CLASS "B"
BAR SIZE	#3	1'-5"	1'-10"
	#4	1'-10"	2'-5"
	#5	2'-4"	3'-0"
	#6	2'-9"	3'-7"
	#7	4'-0"	5'-2"
	#8	4'-7"	5'-11"
	#9	5'-2"	6'-9"

NOTES:
1. UNLESS INDICATED OTHERWISE, USE THE CLASS "B" LAP SPLICE LENGTHS, MULTIPLIED BY THE APPLICABLE FACTOR(S) LISTED BELOW. A CLASS "A" SPLICE MAY BE USED ONLY WHERE NOTED ON THE DRAWINGS.
2. WHERE CLEAR SPACE BETWEEN BARS LAP SPLICED AT ANY SECTION IS LESS THAN 2 BAR DIAMETERS, OR WHERE THE BAR COVER IS LESS THAN OR EQUAL TO THE BAR DIAMETER, INCREASE THE LAP LENGTH BY 50%
3. WHERE HORIZONTAL BARS ARE PLACED SUCH THAT MORE THAN 12 INCHES OF CONCRETE IS CAST BELOW THE BARS, INCREASE LAP SPLICE LENGTH BY 30%
4. WHERE LIGHTWEIGHT AGGREGATE CONCRETE IS USED, INCREASE LAP SPLICE LENGTH BY 30%
5. SPLICES OF HORIZONTAL REINFORCEMENT IN WALLS SHALL BE STAGGERED. SPLICES OF HORIZONTAL REINFORCEMENT IN WALLS CONTAINING TWO CURTAINS OF REINFORCEMENT SHALL NOT OCCUR IN THE SAME LOCATION.

2 REBAR LAP SPLICE

3 SLAB-ON-GRADE DETAILS

1"=1'-0"

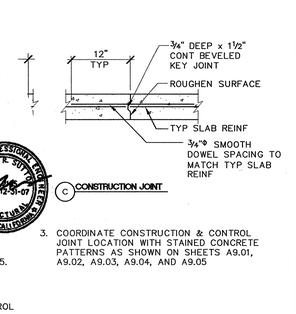

ADD SKETCH FROM RFI-036 FROM STRUC. ENGINEER

APPROVAL STAMP
IDENTIFICATION STAMP
DIVISION OF THE STATE ARCHITECT
APPL 02- 107417
AC ____ FLS ____ SS NL
DATE: 12/21/05

NO.	ISSUED FOR	DATE
1	DSA APPROVAL SET	12/08/05

CERTIFIED BY

REGISTERED PROFESSIONAL ENGINEER JOSEPH R. SUTTON No. 21251 Exp. 12-31-05 STRUCTURAL STATE OF CALIFORNIA

K M D
KAPLAN McLAUGHLIN DIAZ
ARCHITECTURE PLANNING
222 VALLEJO SAN FRANCISCO, CA 94111
(415) 398-5191 FAX (415) 394-7158

DASSE

SOLANO COMMUNITY COLLEGE

SCCD
VALLEJO CENTER
Contract # A003.6123.01.V1

PROJECT NO.	DATE
419-201	12-08-05

TYPICAL CONCRETE DETAILS

AS BUILTS

S5.01

PLOT DATE:

COPYRIGHT © 2004 BY KMD (KAPLAN McLAUGHLIN DIAZ). ALL RIGHTS RESERVED.

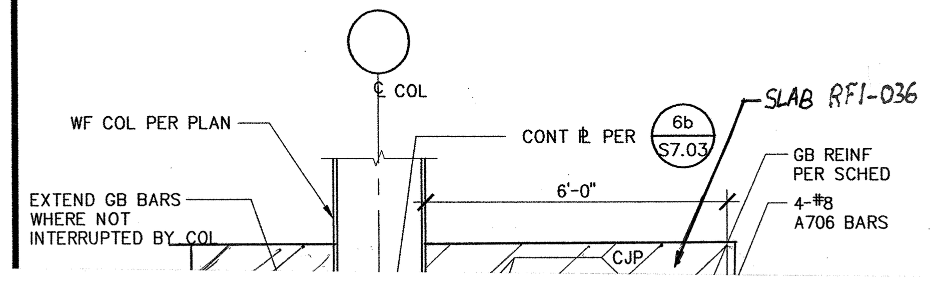

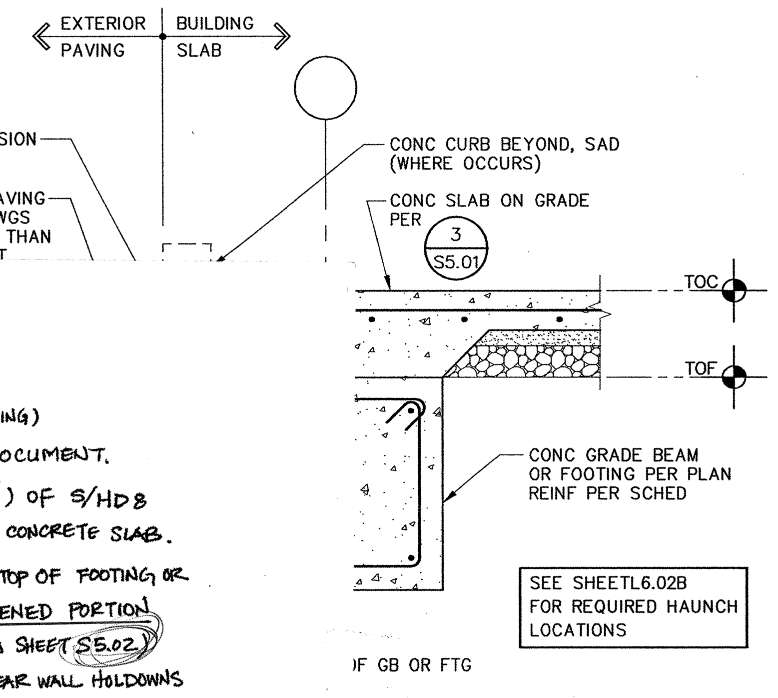

ION

3/4"=1'-0"

Post-it® Fax Note 7671	Date 06/21/06 # of pages ▸ 1
To IVORY JONES	From PAUL DARMUFAL
Co./Dept. RLS	Co. KMD
Phone # 707.553.9728	Phone # 415.399.4253
Fax # 707.649.8327	Fax # 415.399.4819

TO:14153994715B

JAN-27-2004 05:47P FROM:

* THIS IS THE CONDITION (DEEP FOOTING) INTENDED IN THE CONSTRUCTION DOCUMENT.
PLEASE NOTE THE EMBEDMENT (12") OF S/HD8 SHALL BE COUNTING FROM TOP OF CONCRETE SLAB.

* ALSO, PLEASE NOTE THAT, RIGHT ON TOP OF FOOTING OR GRADE BEAM, THERE IS A THICKENED PORTION OF CONCRETE SLAB. (DETAILS ON SHEET S5.02) THEREFORE, 12" EMBEDMENT FOR SHEAR WALL HOLDOWNS SHALL NOT BE A CONCERN.

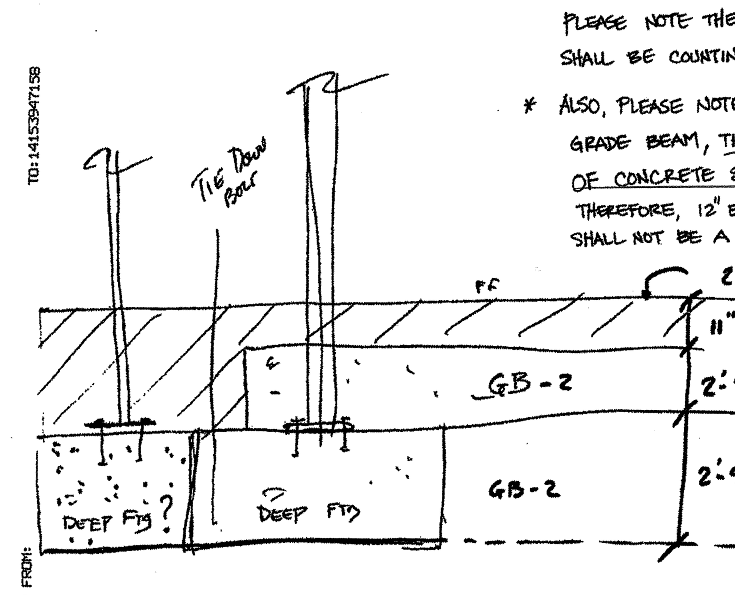

PLEASE LET ME KNOW IF THERE IS ANY FURTHER QUESTION.

Chih-hung Cheng
DASSE Design.
6/21/06

CONDITION "B"

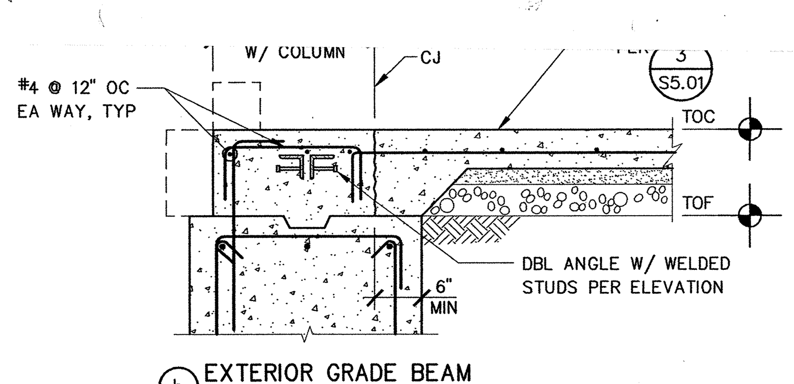

18 BLOCKOUT FOR DBL ANGLES

3/4"=1'-0"

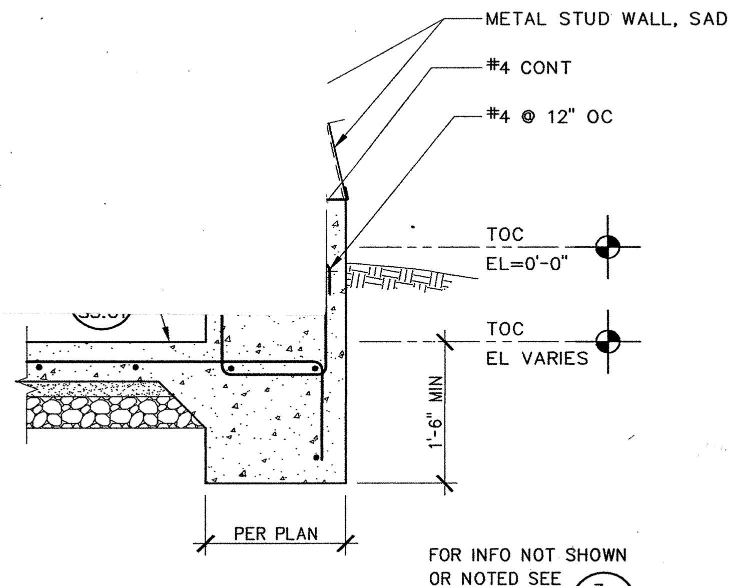

14 EDGE OF SLAB AT SLOPED WALL M.U. BUILDING

3/4"=1'-0"

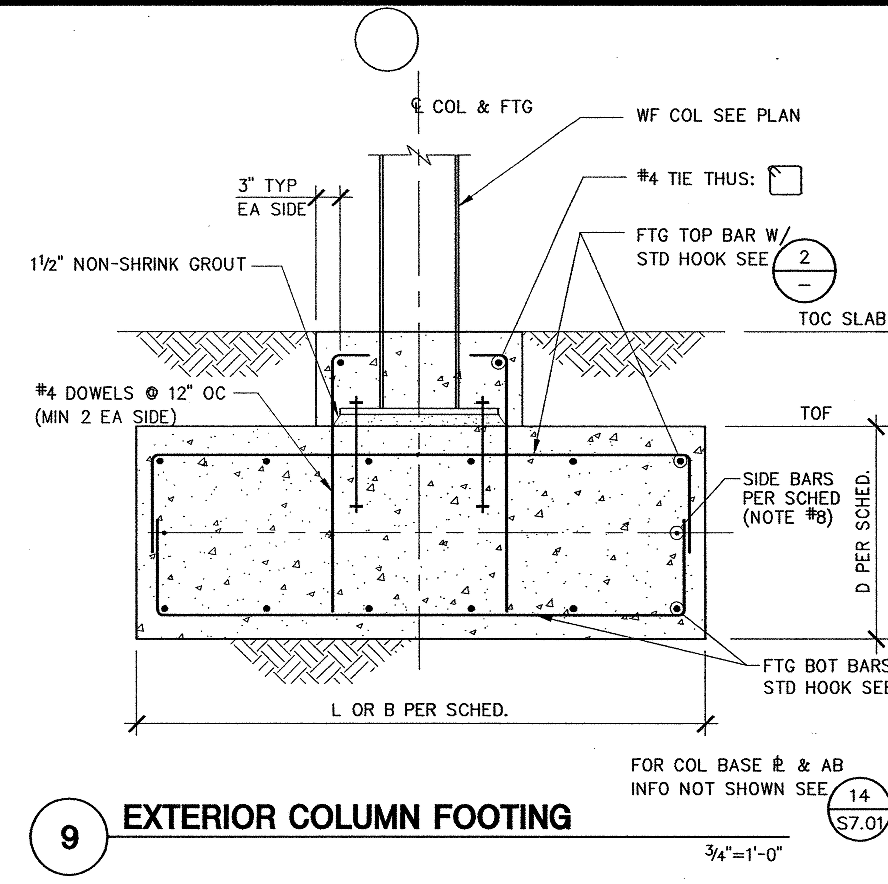

9 EXTERIOR COLUMN FOOTING

3/4"=1'-0"

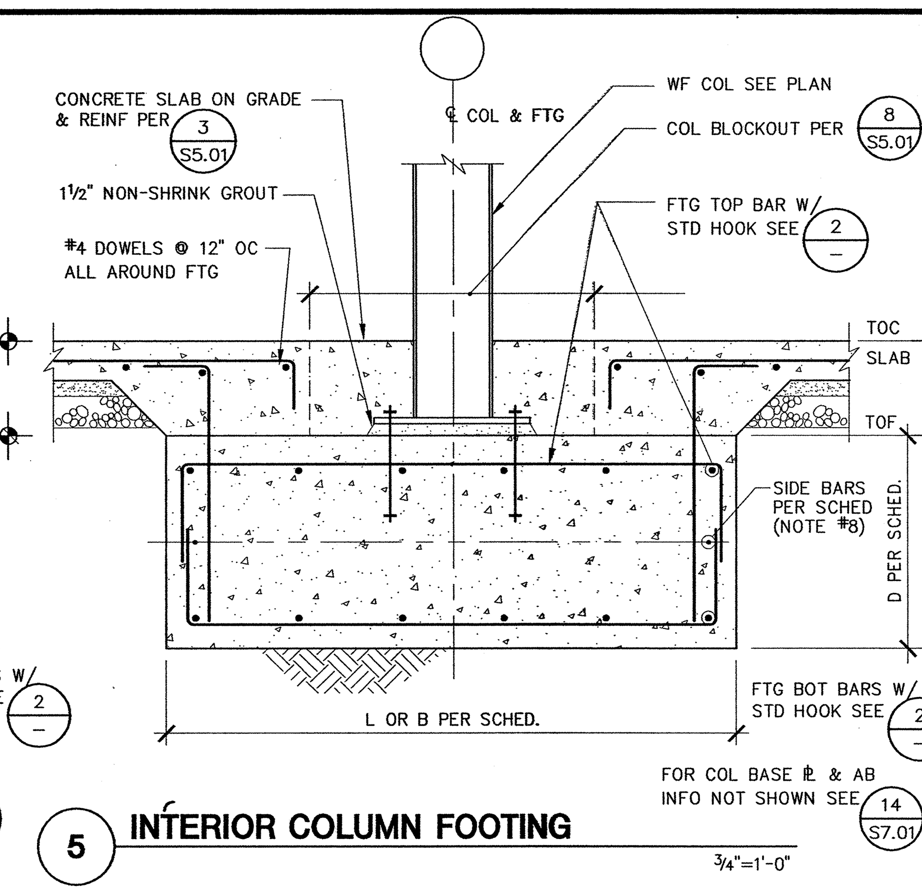

5 INTERIOR COLUMN FOOTING

3/4"=1'-0"

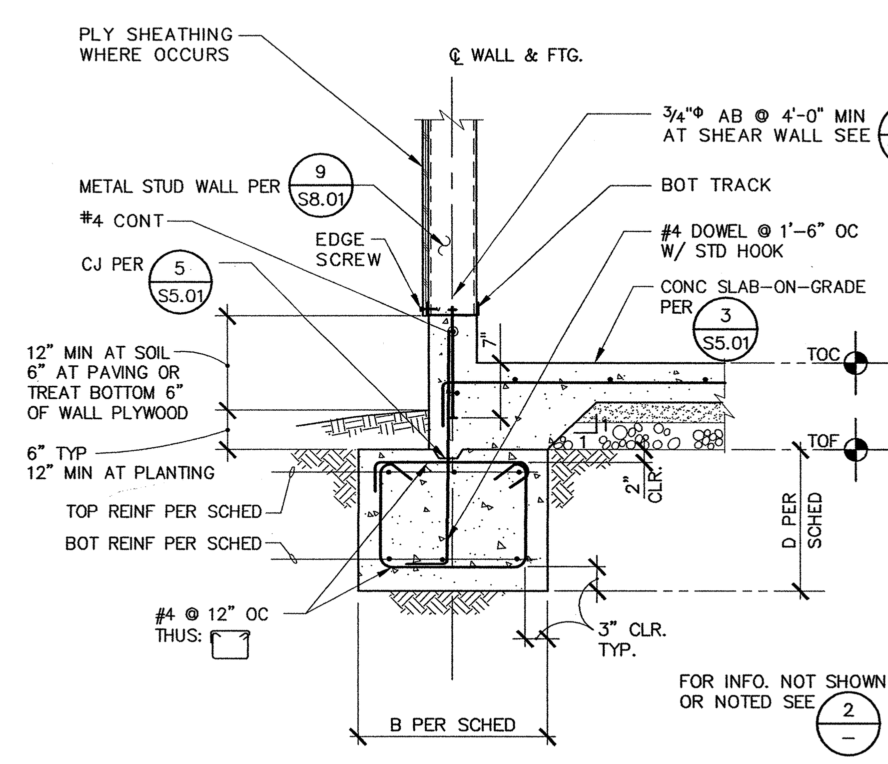

10 EXTERIOR WALL FOOTING SECTION

3/4"=1'-0"

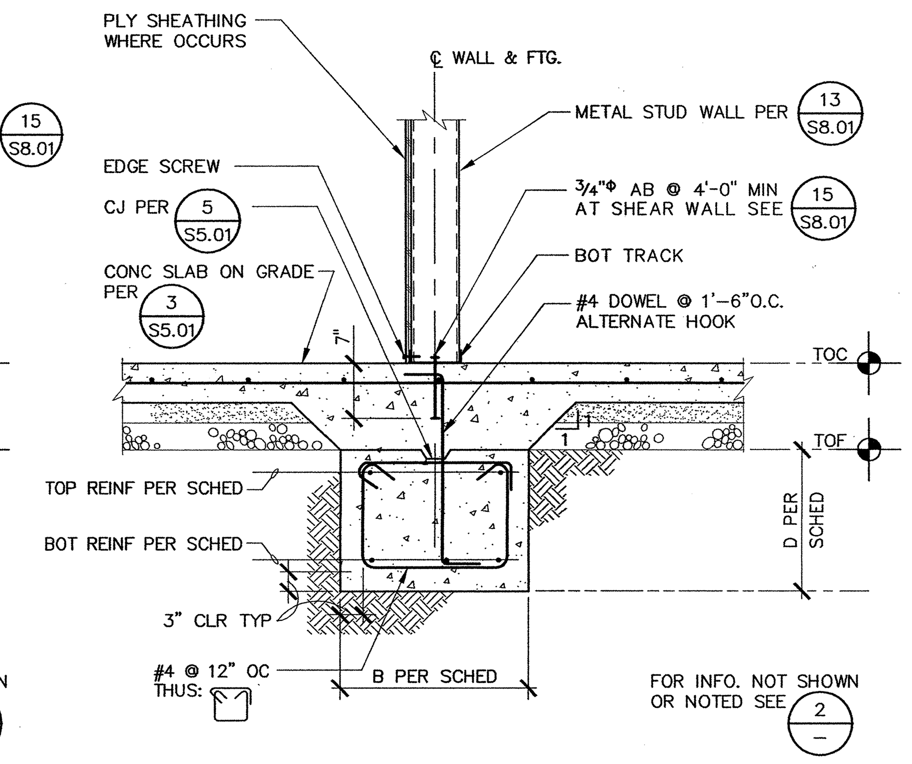

6 INTERIOR WALL FOOTING SECTION

3/4"=1'-0"

FOOTING/GRADE BEAM SCHEDULE				
MARK	L x B x D	TOP REINFORCING	BOTTOM REINFORCING	DETAIL
F3	3'–0"x3'–0"x2'–0"	4–#5 EW	4–#5 EW	5/– 9/–
F4	4'–0"x4'–0"x2'–0"	4–#5 EW	4–#6 EW	5/– 9/–
F5	SEE RFI-040 5'–0"x5'–0"x2'–0"	5–#5 EW	5–#6 EW	5/– 9/–
F5A	5'-0"x5'-0"x2'-3"	5-#5 EW	5-#6 EW	
F6	6'–0"x6'–0"x2'–6"	6–#5 EW	6–#6 EW	5/– 9/–
F7	7'–0"x7'–0"x2'–6"	7–#5 EW	7–#6 EW	5/– 9/–
F8	8'–0"x8'–0"x2'–6"	8–#5 EW	8–#6 EW	5/– 9/–
F8A	8'–0"x8'–0"x2'–6"	8–#7 EW	8–#7 EW	5/– 9/–
FW1.5	PER PLAN x 1'–6" x 2'-0"	3–#5 ADDENDUM #1	3–#5	6/– 10/–
FW2	PER PLAN x 2'–0" x 2'-0"	3–#5	3–#5	6/– 10/–
FW2.5	PER PLAN x 2'–6" x 2'-0"	4–#5	4–#5	6/– 10/–
GB1	PER PLAN x 2'–6" x 2'–3"	4–#8	4–#8	7/– 11/–
GB2	PER PLAN x 3'–0" x 2'–9"	4–#8	4–#8	7/– 11/–
GB3	PER PLAN x 2'–6" x 2'–3"	4–#8	4–#8	7/– 11/–

NOTES:

1. SEE GENERAL NOTES III–A.3 ON SHEET S1.01 FOR BAR CLEARANCE REQUIREMENTS.
2. FORM KEY AT TOP OF GRADE BEAM WITH SHAPED 2x6 PER 5 S5.01
3. FOR GRADE BEAM CONSTRUCTION JOINT SEE 4 –
4. FOR GRADE BEAM TIE SPACING REQUIREMENTS SEE 12 –
5. WHERE GRADE BEAMS INTERSECT OR TERMINATE AT SPREAD FOOTINGS, EXTEND LONGITUDINAL GRADE BEAM REINF INTO FOOTING PER 12 –
6. LOCATE SPLICE OF LONGITUDINAL GRADE BEAM REINF AT MIDDLE THIRD OF SPAN OF BETWEEN COLUMNS. SEE 12 –
7. FOR STEPS IN FOOTINGS OR GRADE BEAMS, SEE 3 –.

   SET TOP OF GRADE BEAMS EQUAL TO TOF ELEVATION OF INTERSECTING FOOTINGS. STEP GRADE BEAMS WHERE TOP OF ADJACENT FOOTINGS ARE AT DIFFERENT ELEVATIONS.
8. WHERE "D" ≥ 2'–0" ADD #5 SIDE BARS @ 12" OC MAX.

2 FOOTING/GRADE BEAM SCHEDULE

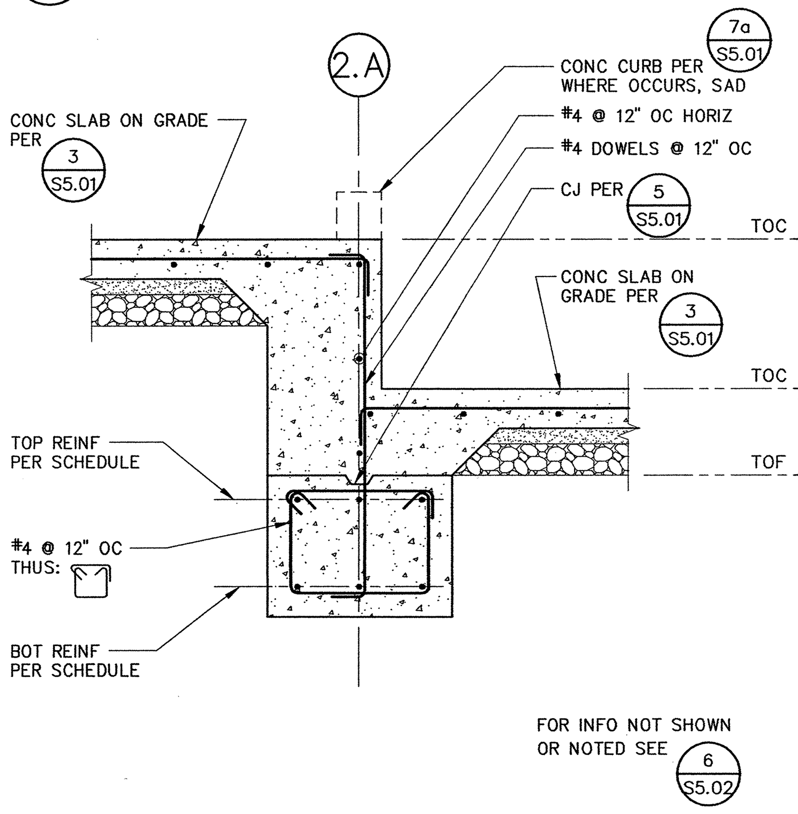

19 SLAB ELEVATION CHANGE M.U. BUILDING

3/4"=1'-0"

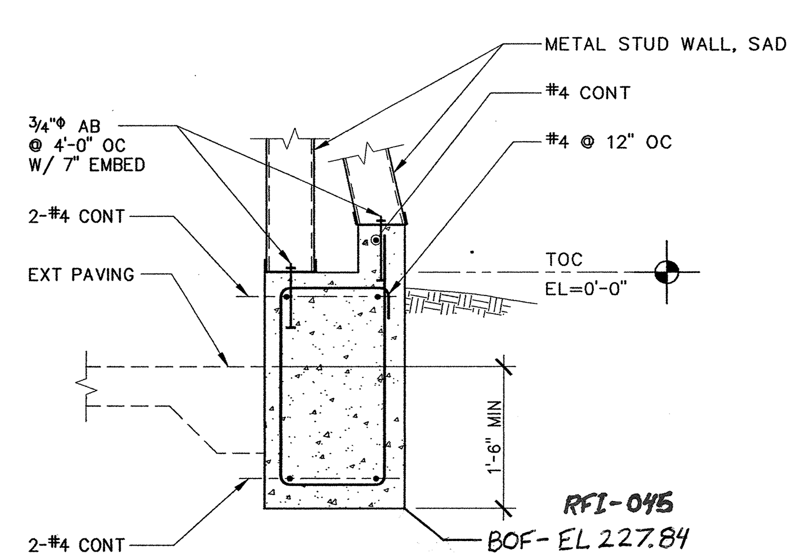

15 EXTENSION OF SLOPED WALL M.U. BUILDING

3/4"=1'-0"

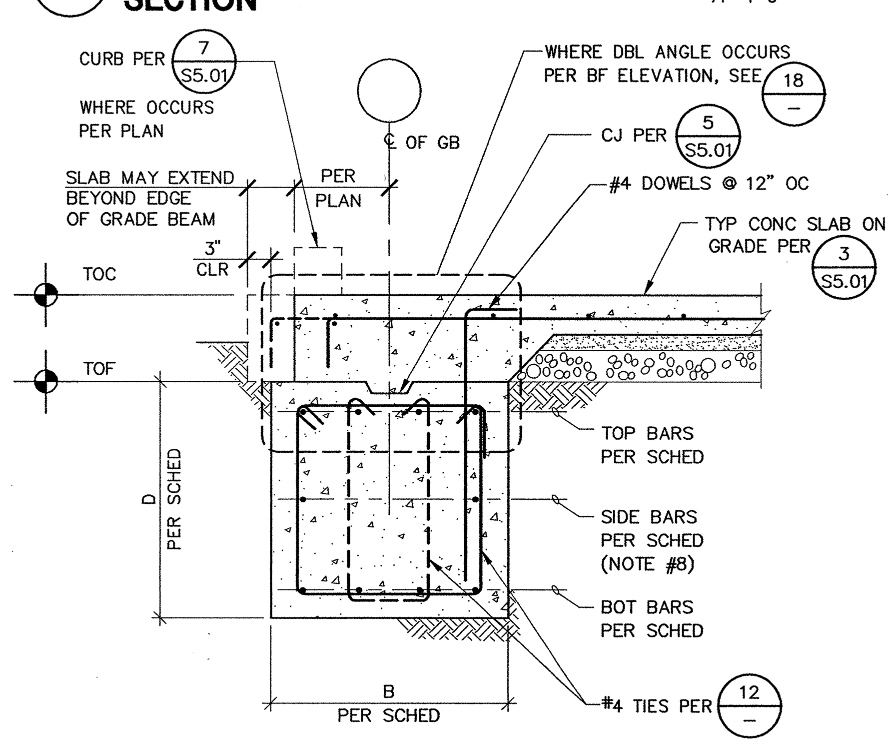

11 EXTERIOR GRADE BEAM SECTION

3/4"=1'-0"

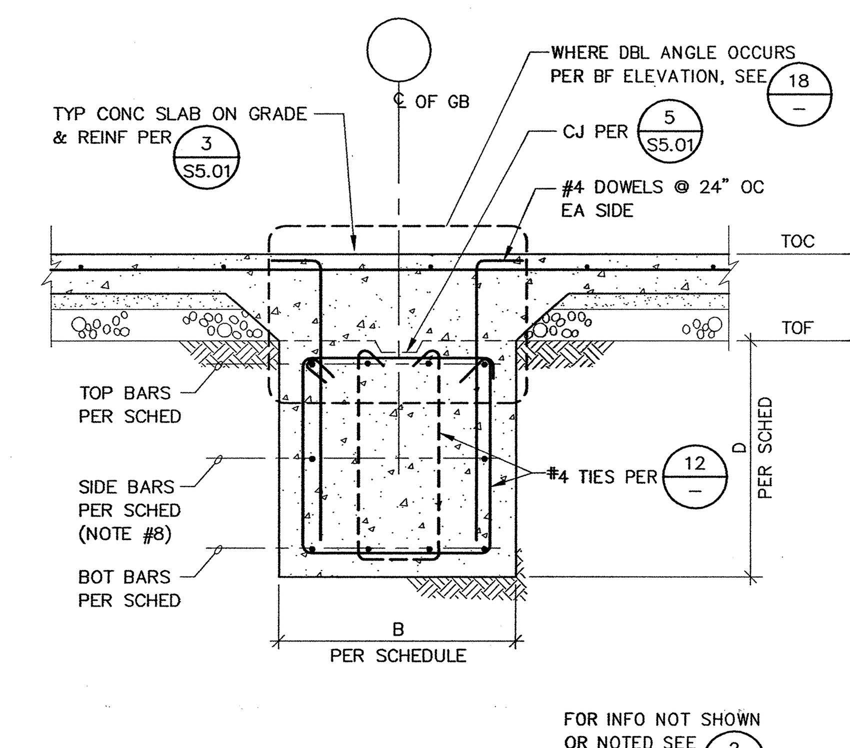

7 INTERIOR GRADE BEAM SECTION

3/4"=1'-0"

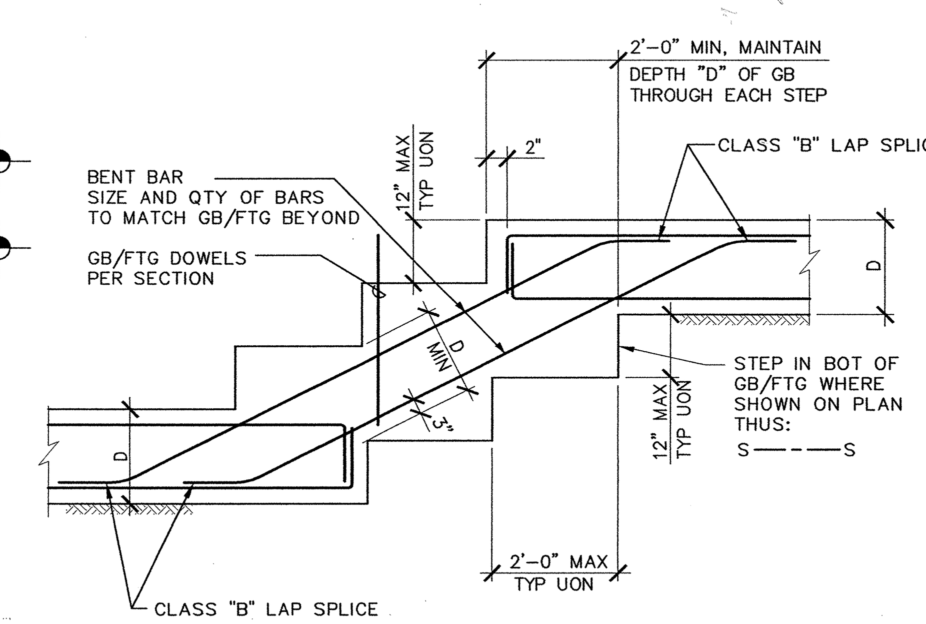

3 STEPS IN GRADE BEAM/FOOTING

1/2"=1'-0"

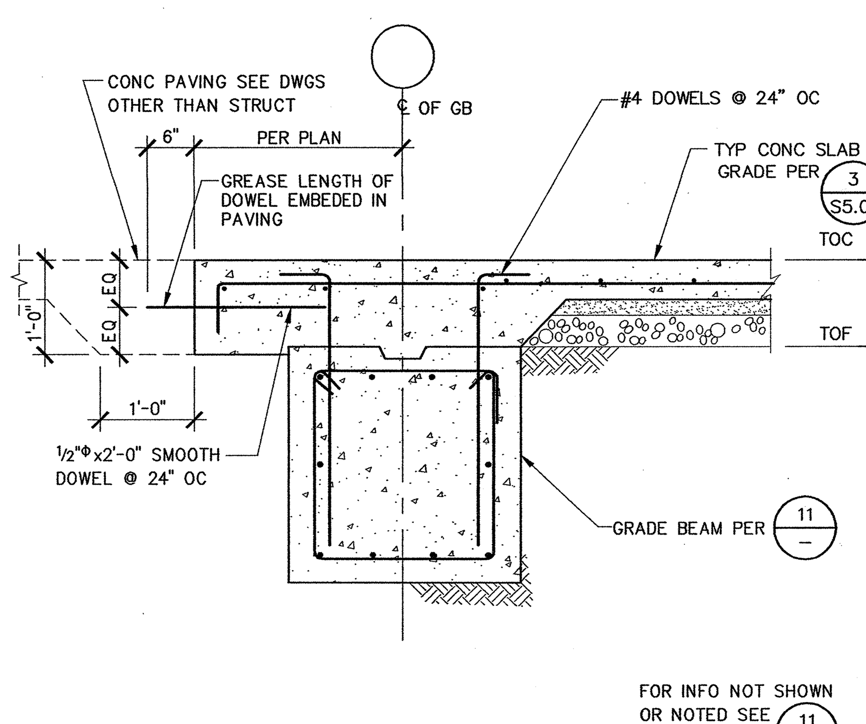

20 EDGE OF SLAB AT LOBBY SECTION

3/4"=1'-0"

GRADE BEAM TIE SCHEDULE				
		GB1	GB2	GB3
REGION A (TYP UON)	TYPE	[tie]	[tie]	[tie]
	SPACING	10" OC	12" OC	10" OC
REGION B	TYPE	[tie]	[double tie]	[double tie]
	SPACING	10" OC	7" OC	5" OC
REGION C	TYPE		[tie]	
	SPACING		4" OC	
DISTANCE D		2'–0"	N/A	4'–7"

16 GRADE BEAM TIE SCHEDULE

NTS

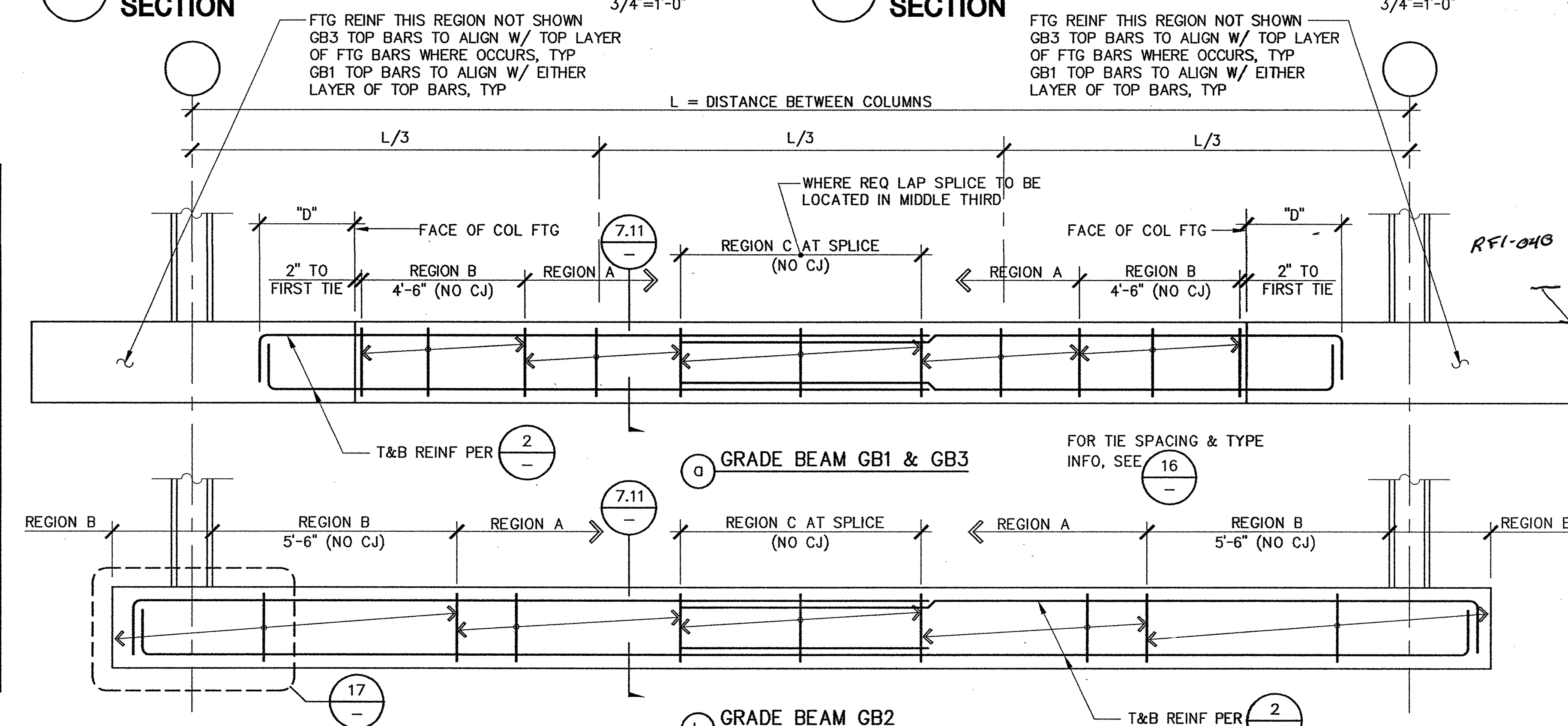

12 TIES & SPLICES IN GRADE BEAMS ELEVATION

3/8"=1'-0"

NOTE:
CONTRACTOR SHALL SUBMIT GRADE BEAM/FOOTING CJ LOCATIONS TO THE STRUCTURAL ENGINEER FOR REVIEW & APPROVAL PRIOR TO POURING CONCRETE.

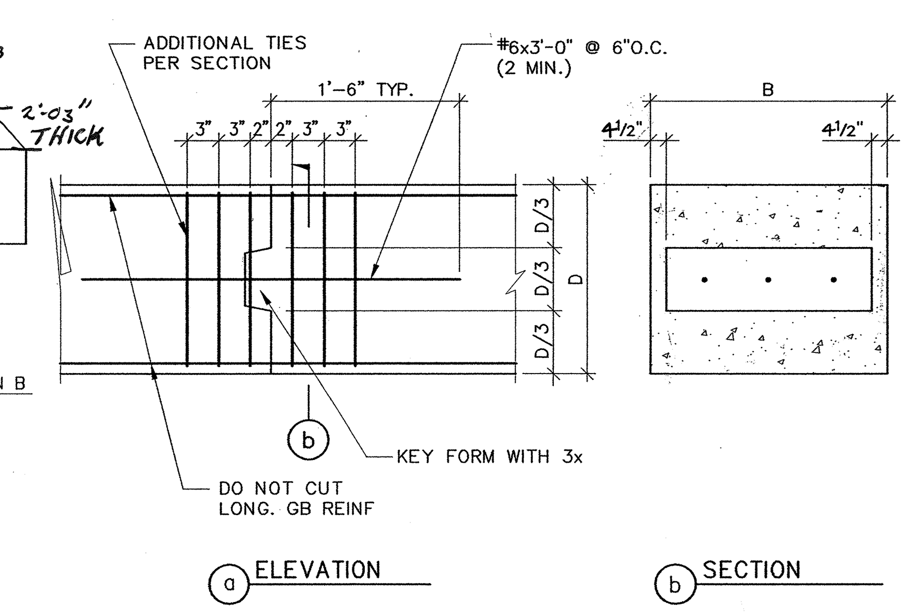

4 CONSTRUCTION JOINTS IN GB/FTG

3/4"=1'-0"

APPROVAL STAMP
IDENTIFICATION STAMP
DIVISION OF THE STATE ARCHITECT
APPL 02– 107417
AC ____ FLS ____ SS PK
DATE: 12/21/05

NO.	ISSUED FOR	DATE
1	DSA APPROVAL SET	12/08/05

CERTIFIED BY

REGISTERED PROFESSIONAL ENGINEER — JOSEPH R. SUTTON — NO. 2185 — Exp. 12-31-05 — STRUCTURAL — STATE OF CALIFORNIA

K M D
KAPLAN McLAUGHLIN DIAZ
ARCHITECTURE PLANNING
222 VALLEJO SAN FRANCISCO, CA 94111
(415) 398-5191 FAX (415) 394-7158

DASSE

SOLANO COMMUNITY COLLEGE

SCCD
VALLEJO CENTER
Contract # A003.6123.01.V1

PROJECT NO.	DATE
419–201	12–08–05

CONCRETE FOUNDATION DETAILS

AS BUILTS

S5.02

FILE: E:\2004 Jobs\04B176\Struct\04B176S502.dwg07/05/05 at 13:32
XREF: .\04B176S_TB.dwg

PLOT DATE:

COPYRIGHT © 2004 BY KMD (KAPLAN McLAUGHLIN DIAZ). ALL RIGHTS RESERVED.

17 TYPICAL COLUMN CAP

1"=1'-0"

STORY LEVEL								
ROOF								
2ND FLOOR (WHERE OCCURS)		SEE SHEET S3.01	SEE SHEET S3.01	W10x33	W10x49	W8x31	HSS8x8x3/8	HSS7x7x3/8
GROUND FLOOR								
COLUMN DESIGNATION		CBF	CMF	C1	C2	C3	C4	C5
BASE PLATE	B	DET	18"	16"	16"	14"	12"	13"
	C	DET	18"	16"	16"	8"	12"	13"
	℄	DET	3/4"	1 1/8"	1 1/8"	3/4"	3/4"	3/4"
	DETAIL	11,15 S7.03	19a –	19a –	19a –	12 –	19b –	19b –
COMMENTS		BRACED FRAME COLUMN	MOMENT FRAME COLUMN					

NOTES:

1. SEE FOUNDATION PLAN FOR COLUMN ORIENTATION.
2. SEE DETAIL 17 – FOR COLUMN CAP DETAIL.
3. OMIT COLUMN CAP WHERE CONTINUITY PLATES ARE REQUIRED BY 8 –

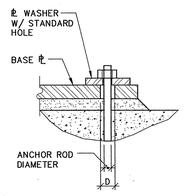

ANCHOR ROD DIAMETER	OVERSIZE HOLE SIZE "D"	℄ WASHER
3/4"	1 1/16"	℄ 3/8x2 1/2x2 1/2
7/8"	1 3/16"	℄ 3/8x2 1/2x2 1/2
1"	1 1/2"	℄ 3/8x2 1/2x2 1/2
1 1/4"	1 3/4"	℄ 1/2x3x3
1 1/2"	2"	℄ 1/2x3x3

18 OVERSIZED HOLE WITH PLATE WASHER CONTRACTOR'S OPTION

14 COLUMN SCHEDULE

NTS

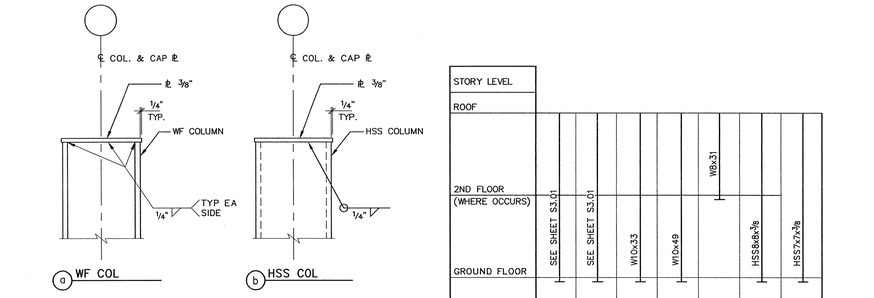

19 COLUMN BASE PLATE

1"=1'-0"

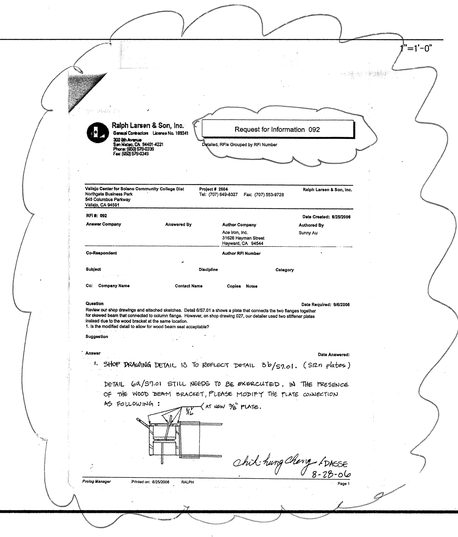
Ralph Larsen & Son, Inc.
General Contractor License No. 185541
320 Blodgett
Santa Rosa, CA 94401-4221
Phone (800) 274-0236
Fax (800) 570-0240

Request for Information 092

Detailed, RFIs Grouped by RFI Number

Vallejo Center for Solano Community College Dist
Northgate Business Park
548 Cabrillo Parkway
Vallejo, CA 94591

Project # 3554
Tel: (707) 649-8327 Fax: (707) 553-8720

Ralph Larsen & Son, Inc.

RFI #: 092
Date Created: 8/30/2006

Answer Company | Answered By | Author Company: Ace Iron, Inc., 31426 Hayman Street, Hayward, CA 94544 | Authored By: Sunny Au | Category

Co-Respondent | Author RFI Number

Subject | Discipline | Category

Cc: Company Name | Contact Name | Copies | Notes

Question — Date Resolved: 9/6/2006

Review our shop drawings and attached sketches. Detail S07.01 A shows a plate that connects the two flanges together for skewed beam that connected to column flange. However, on shop drawing 027, our detailer used two different plates instead due to the wood bracket at the same location.
1. Is the modified detail to allow for wood beam seat acceptable?

Suggestion

Answer — Date Answered:

1. SHOP DRAWING DETAIL IS TO REFLECT DETAIL 5b/S7.01. (SIDE PLATES)

DETAIL 6A/S7.01 STILL NEEDS TO BE ENCRUCIATED. IN THE PRESENCE OF THE WOOD BEAM BRACKET, PLEASE MODIFY THE PLATE CONNECTION AS FOLLOWAIN:

(4) MIN 3/8 PLATES.

Chi-Hung Cheng - DSA/SS 8-29-06

Printed on: 8/30/2006 Page 1

10 CANTILEVERED BEAM TO BEAM CONNECTION

NTS

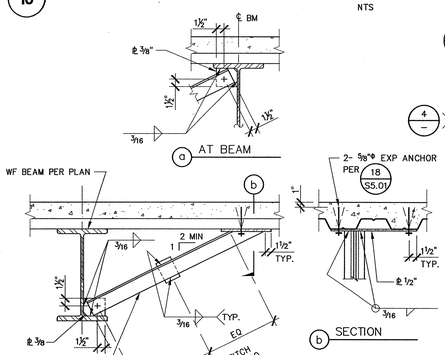

9 FULL DEPTH SHEAR PLATE

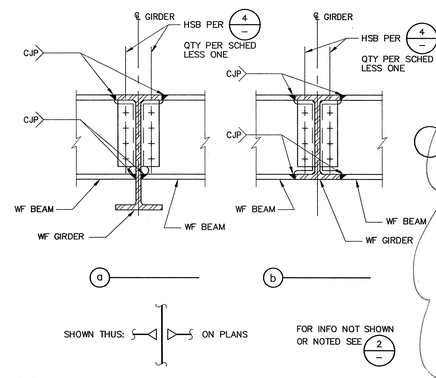

5 W6, C6, & L6 CONNECTION AT WF BEAM

1 1/2"=1'-0"

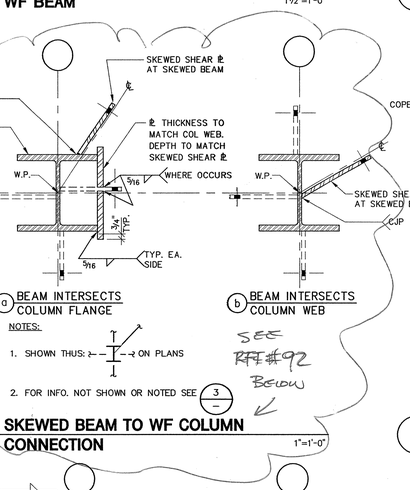

1. SEE GENERAL NOTES ON SHEET S1.01.
2. UNLESS OTHERWISE NOTED:
   A. ALL PLATES ARE 3/8".
   B. ALL HSB ARE 7/8"Φ A325N
   C. ALL MB ARE 3/4"Φ A307.
   D. ALL BUTT OR GROOVE WELDS ARE COMPLETE PENETRATION WELDS.
3. EACH COMPLETE PENETRATION WELD SHALL BE INSPECTED BY TESTING, SEE SPECIFICATIONS.
4. WELDING DETAILS SHALL COMPLY WITH THE "CODE FOR ARC AND GAS WELDING IN BUILDING CONSTRUCTION" OF THE AMERICAN WELDING SOCIETY, LATEST ISSUE. FOR FURTHER WELDING REQUIREMENTS, SEE SPECIFICATIONS.
5. SCHEDULE WELDING AND BOLT TIGHTENING SEQUENCE TO MINIMIZE LOCKED UP STRESSES.
6. ERECTION CLIPS, BRACING, ETC. AS REQUIRED BY CONTRACTOR ARE NOT SHOWN.
7. UTILIZE TYPICAL CONNECTIONS IN SKEWED CONFIGURATIONS AS REQUIRED U.O.N.
8. THE DETAILS ON THIS SHEET SHOW STRUCTURAL FEATURES ONLY. FOR DETAILS AND DIMENSIONS NOT SHOWN, REFER TO DRAWINGS OTHER THAN STRUCTURAL.

1 STRUCTURAL STEEL NOTES

N.T.S.

6 SKEWED BEAM TO WF COLUMN CONNECTION

1"=1'-0"

2 BEAM TO BEAM CONNECTION

N.T.S.

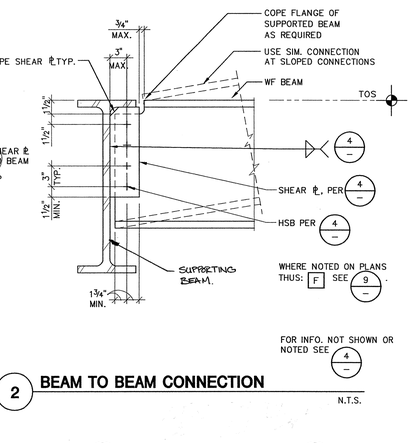

11 BEAM BRACING

1"=1'-0"

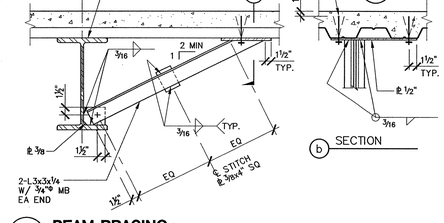

7 BEAM TO HSS COLUMN CONNECTION

1"=1'-0"

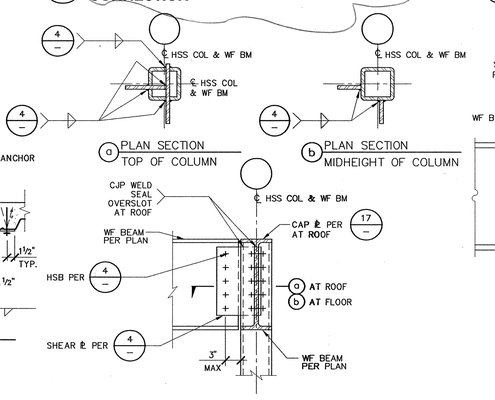

3 BEAM TO WF COLUMN CONNECTION

1"=1'-0"

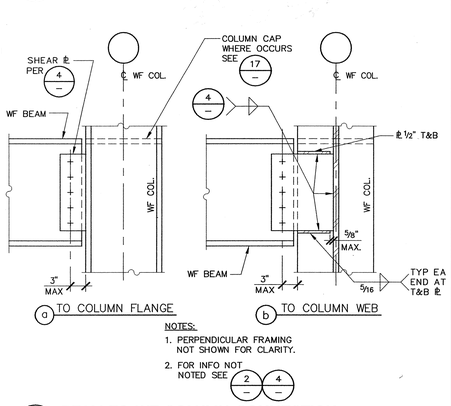

12 COLUMN AT TRANSFER GIRDER

1"=1'-0"

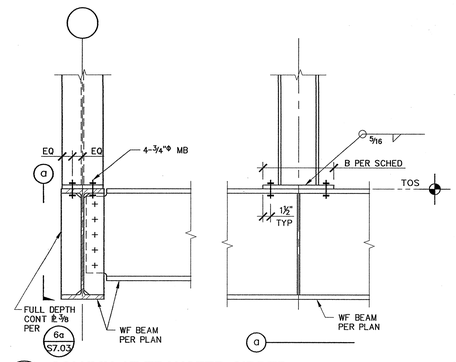

8 CANTILEVERED BEAM TO COLUMN FLANGE CONNECTION

1"=1'-0"

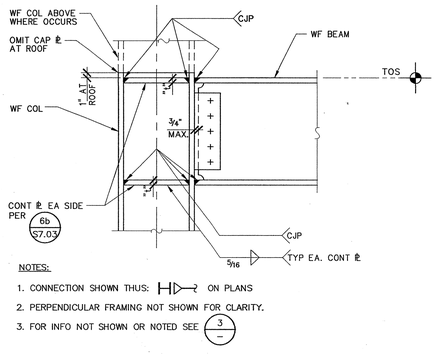

BEAM DEPTH CATEGORY	NO. OF BOLTS(2) 7/8"Φ HSB	SHEAR PLATE	WELD(1) SIZE
W8, W10	2	3/8"	1/4"
W12,W14,C12,MC12	3	3/8"	1/4"
W16	4	3/8"	1/4"
W18	5	3/8"	1/4"
W21	6	3/8"	1/4"
W24	7	1/2"	5/16"
W27, W30	8	1/2"	5/16"
W33	9	1/2"	5/16"

NOTES:

1) USE COMPLETE PENETRATION WELDS AT ALL SKEWED CONNECTIONS WHERE AISC PRE-QUALIFIED FILLET WELDS ARE NOT POSSIBLE

2) USE 1"Φ HSB BOLT WHERE DENOTED ON FRAMING PLANS THUS: 1

3) MARKS F ON PLANS DENOTE FULL DEPTH SHEAR ℄ OR GIRDER BRACE PER 9 –

4 BEAM CONNECTION SCHEDULE

N.T.S.

APPROVAL STAMP
IDENTIFICATION STAMP
DIVISION OF THE STATE ARCHITECT
APPL 02- 107417
AC ____ FLS ____ SS NL
DATE: 12/21/05

NO.	ISSUED FOR	DATE
1	DSA APPROVAL SET	12/08/05

CERTIFIED BY

REGISTERED PROFESSIONAL ENGINEER JOSEPH R. SUTTON NO. 21185 Exp. 12-31-05 STRUCTURAL STATE OF CALIFORNIA

K M D
KAPLAN McLAUGHLIN DIAZ
ARCHITECTURE PLANNING
222 VALLEJO SAN FRANCISCO, CA 94111
(415) 398-5191 FAX (415) 394-7158

DASSE
Deputy Success Inc.
Total Prevention 21 More Montgomery Inc.
Authentic Alpha Inc.
Star Dasse San Francisco Cal county
Strategic Talent Management Group Inc.
www.dasse.com

SOLANO COMMUNITY COLLEGE

SCCD
VALLEJO CENTER
Contract # A003.6123.01.V1

PROJECT NO.	DATE
419-201	12-08-05

TYPICAL STEEL DETAILS
AS BUILTS

S7.01

PLOT DATE:

COPYRIGHT © 2004 BY KMD (KAPLAN McLAUGHLIN DIAZ). ALL RIGHTS RESERVED.

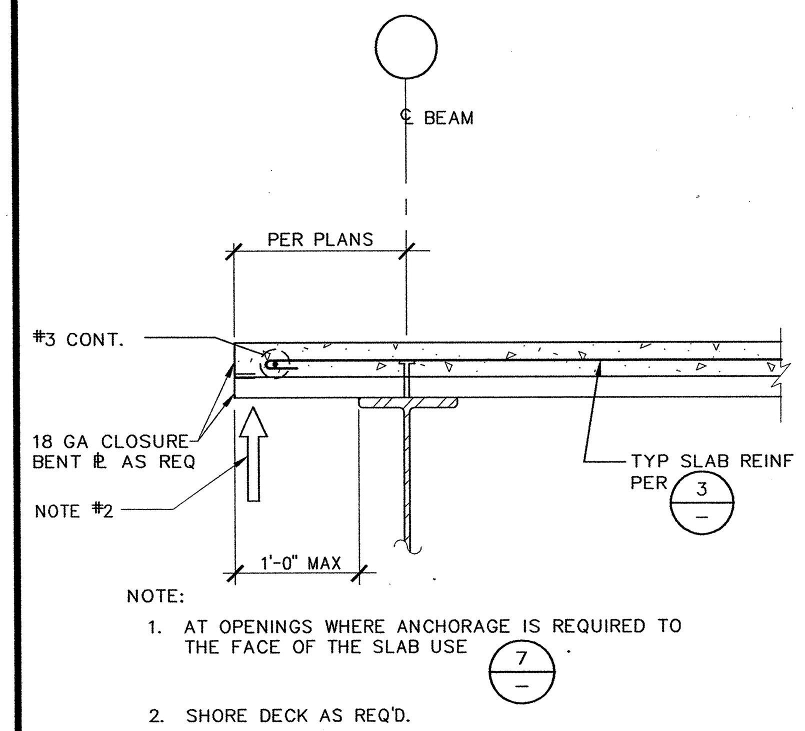

NOTE:
1. AT OPENINGS WHERE ANCHORAGE IS REQUIRED TO THE FACE OF THE SLAB USE 7.
2. SHORE DECK AS REQ'D.

17 EDGE OF DECK W/ CONC FILL INTERIOR
1"=1'-0"

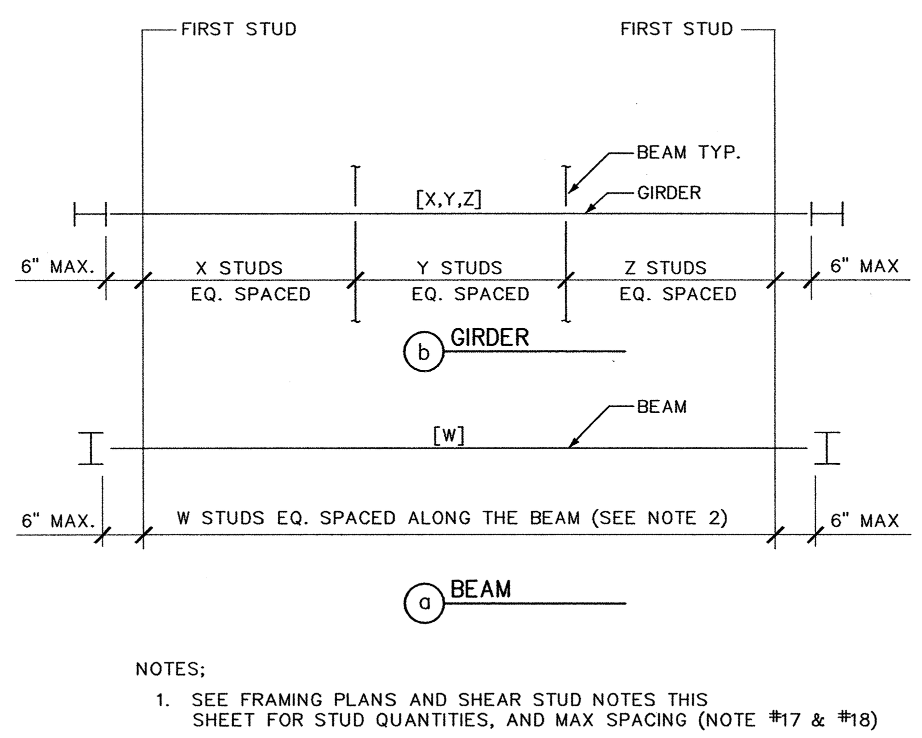

NOTES;
1. SEE FRAMING PLANS AND SHEAR STUD NOTES THIS SHEET FOR STUD QUANTITIES, AND MAX SPACING (NOTE #17 & #18)

13 SHEAR STUD SPACING DIAGRAM

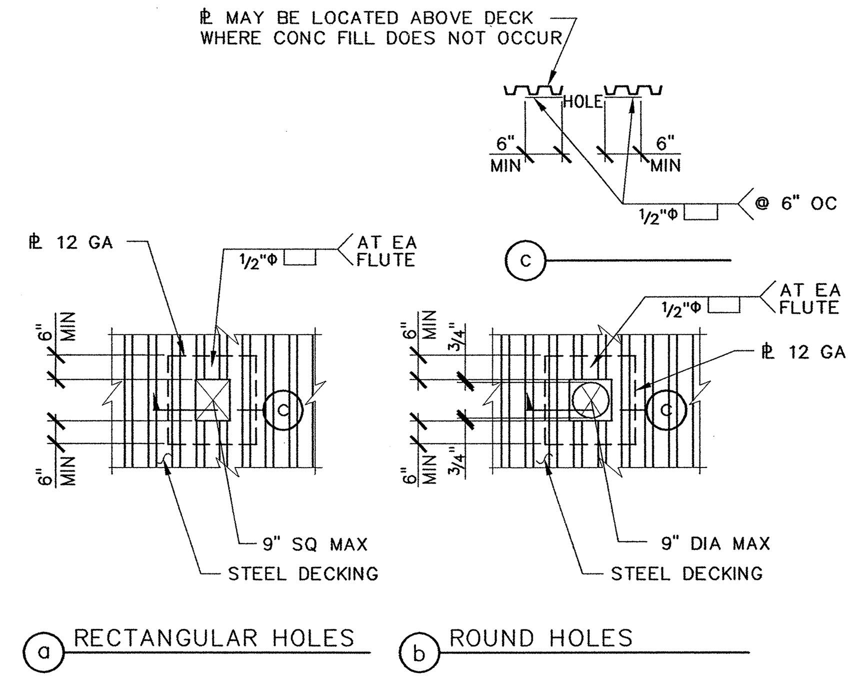

SEE NOTE 12 OF STEEL DECKING AND SHEAR STUD NOTES THIS SHEET FOR OPENINGS 4" AND SMALLER.

9 SMALL OPENING IN STEEL DECK PLAN
1/2"=1'-0"

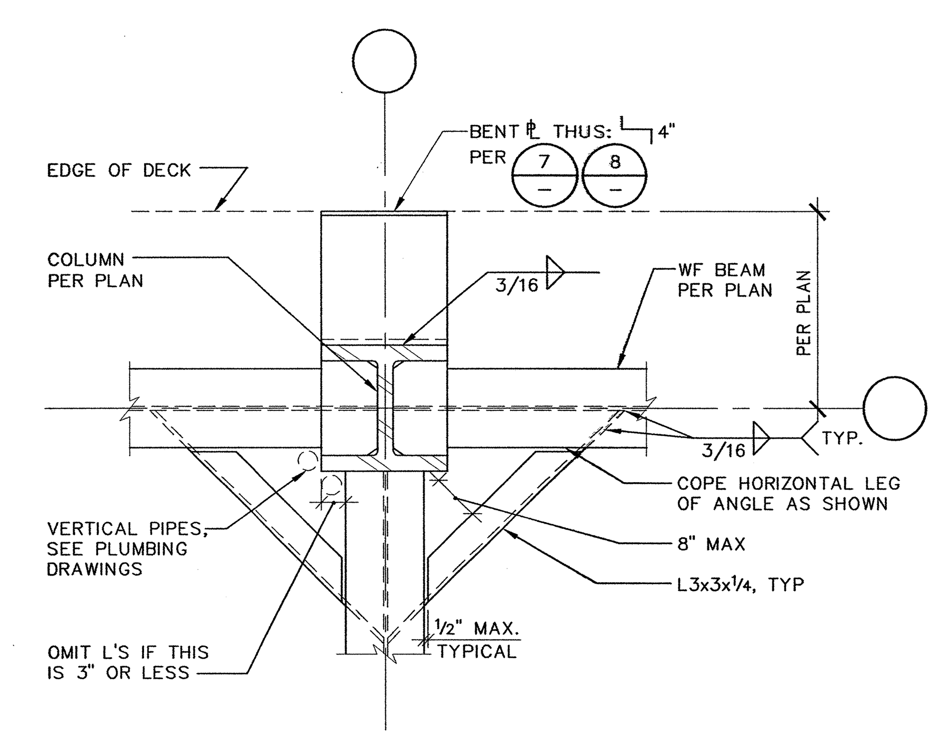

5 STEEL DECK SUPPORT AT EXTERIOR COLUMN
1"=1'-0"

1. SEE GENERAL NOTES ON S1.01 FOR MATERIAL SPECIFICATIONS.
2. STRUCTURAL PROPERTIES OF STEEL DECK SYSTEM SHALL EQUAL OR EXCEED THE PROPERTIES LISTED IN DETAIL 3 ON THIS SHEET.
3. DECKING SHALL BE CONTINUOUS OVER 3 OR MORE SUPPORTS WHEREVER POSSIBLE. OTHERWISE PROVIDE SHORING AS REQUIRED PER MANUFACTURER'S RECOMMENDATIONS. SPLICES SHALL BE LOCATED OVER SUPPORTS.
4. DECK SHALL HAVE A MINIMUM OF 2" BEARING AT ALL SUPPORTING MEMBERS (MEMBERS PERPENDICULAR TO DECK SPAN), AND 1-1/2" AT ALL PARALLEL MEMBERS.
5. DECK WELDING AND MECHANICAL CONNECTIONS SHALL BE AS NOTED IN DETAIL 3 ON THIS SHEET.
6. PROVIDE BENT ℙ CLOSURE PIECES AT ALL INTERIOR AND EXTERIOR EDGES OF DECK UON. SEE DETAILS 7, 8, 12, AND 17 ON THIS SHEET.
7. OPENINGS THROUGH DECKING SHOWN ON FRAMING PLANS ARE NOT COMPLETE AS TO NUMBER, SIZE AND LOCATION. FOR COMPLETE INFORMATION REFER TO DRAWINGS OTHER THAN STRUCTURAL.
8. USE STRENGTHENING AT OPENINGS AS SHOWN IN DETAILS 9, 10, AND 11 ON THIS SHEET UON. PROVIDE STRENGTHENING BEFORE CUTTING OPENING.
9. DETAILS SHOWN ARE FOR TYPICAL REINFORCING OF DECKS AT OPENINGS. FOR SPECIAL CONDITIONS, SUBMIT LAYOUT OF OPENINGS AND PROPOSED REINFORCING OF DECK FOR REVIEW.
10. MULTIPLE OPENINGS WITH A CLEAR DISTANCE LESS THAN 32" OR FOUR TIMES THE SIZE OF THE LARGER OPENING, WHICHEVER IS GREATER, ARE TO BE TREATED AS A SINGLE GROUP OPENING.
11. IF OPENING IS CUT PRIOR TO FILL PLACEMENT, PROVIDE CLOSURE PIECES AND SHORING AS REQUIRED.
12. FOR OPENINGS THROUGH DECK THAT CUT ONLY ONE RIB AND ARE 4" SQUARE OR 4" DIAMETER MAXIMUM, NO STRENGTHENING IS REQUIRED.
13. SEE MECHANICAL / PLUMBING DRAWINGS FOR DETAILS OF UTILITIES SUSPENDED FROM THE CONCRETE AND STEEL DECK SYSTEM. POINT LOADS TO THE DECK FROM THESE DETAILS SHALL NOT EXCEED 100 POUNDS.
14. DO NOT PLACE CONDUITS OR OTHER PIPES IN CONCRETE FILL OVER DECK.
15. SHEAR STUDS WELDED THROUGH THE DECK, WITH A MINIMUM CLEARANCE OF 1" FROM THE EDGE OF THE DECK TO THE STUD CENTER LINE, MAY BE SUBSTITUTED ONE FOR ONE FOR A DECK WELD.
16. ALL WELDED STUDS SHALL BE 3/4" DIAMETER. STUD LENGTHS SHALL BE PER DETAIL 14 ON THIS SHEET.
17. TYPICAL SHEAR STUD SPACING IS SHOWN IN DETAIL 13 ON THIS SHEET. WHERE ONE NUMBER OF STUDS DESIGNATION IS GIVEN, SPACE SHEAR STUDS EQUALLY ALONG BEAM AS SHOWN. WHERE MULTIPLE NUMBER OF STUDS DESIGNATIONS ARE GIVEN, ONE DESIGNATION IS PROVIDED FOR EACH BAY. SPACE SHEAR STUDS EQUALLY THROUGH BAY.
18. ALL BEAMS AND GIRDERS WHICH ARE COVERED BY STEEL DECK AND CONCRETE FILL, SHALL HAVE SHEAR STUDS WITH A MAXIMUM SPACING OF 12" ON CENTER UNLESS OTHERWISE NOTED.
19. SEE DETAILS 5 & 6 ON THIS SHEET FOR TYPICAL DECK SUPPORT AT COLUMNS.
20. SEE DETAIL 15 ON THIS SHEET FOR TYPICAL CONSTRUCTION JOINT IN CONCRETE.
21. FOR ROOFS WITH SLOPES OF 1:12 OR GREATER PROVIDE SHIM OR BENT PLATE PER DETAIL 19 ON THIS SHEET.

2 STEEL DECKING & SHEAR STUD NOTES

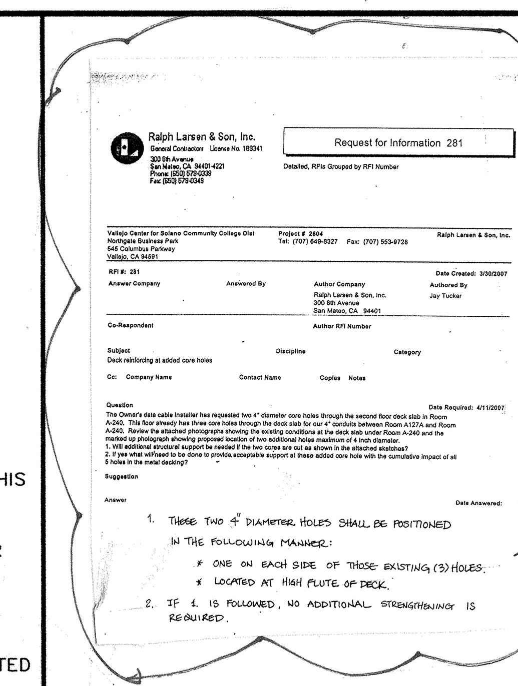
Ralph Larsen & Son, Inc.
Request for Information 281
Subject: Deck reinforcing at added core holes
1. THESE TWO 4" DIAMETER HOLES SHALL BE POSITIONED IN THE FOLLOWING MANNER:
* ONE ON EACH SIDE OF THOSE EXISTING (3) HOLES.
* LOCATED AT HIGH FLUTE OF DECK.
2. IF 1. IS FOLLOWED, NO ADDITIONAL STRENGTHENING IS REQUIRED.

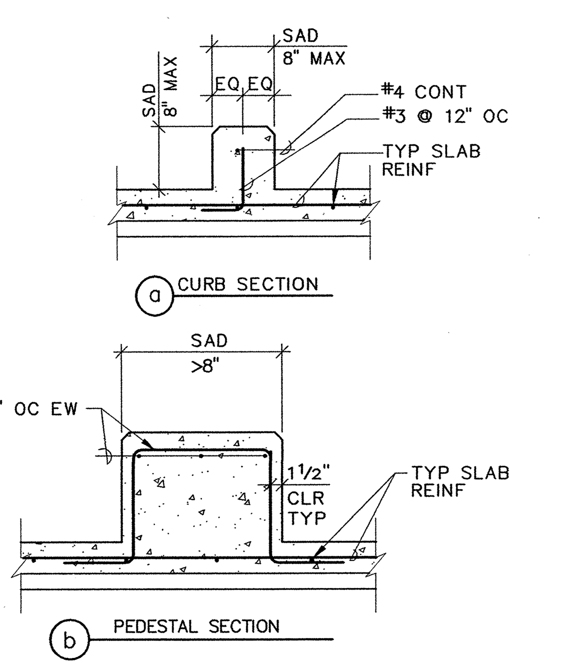

18 CONCRETE CURBS AT STEEL DECK

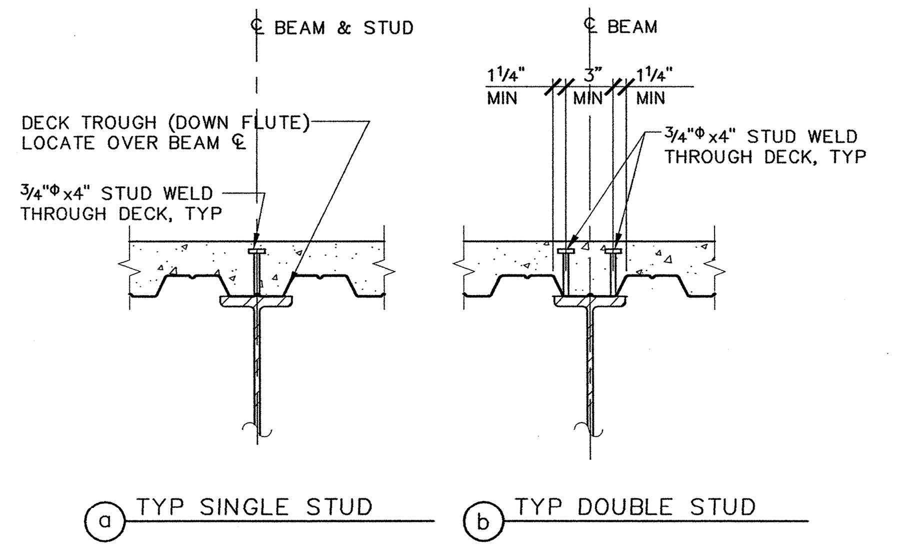

NOTES:
1. SPLIT DECK LONGITUDINALLY WHERE REQ TO ENLARGE TROUGH.
2. PROVIDE DOUBLE STUDS WHERE SINGLE STUD SPACING WOULD BE LESS THAN 4 1/2" OC
3. OMIT STUDS AT STAIR LANDINGS.

14 SHEAR STUD DETAIL
1"=1'-0"

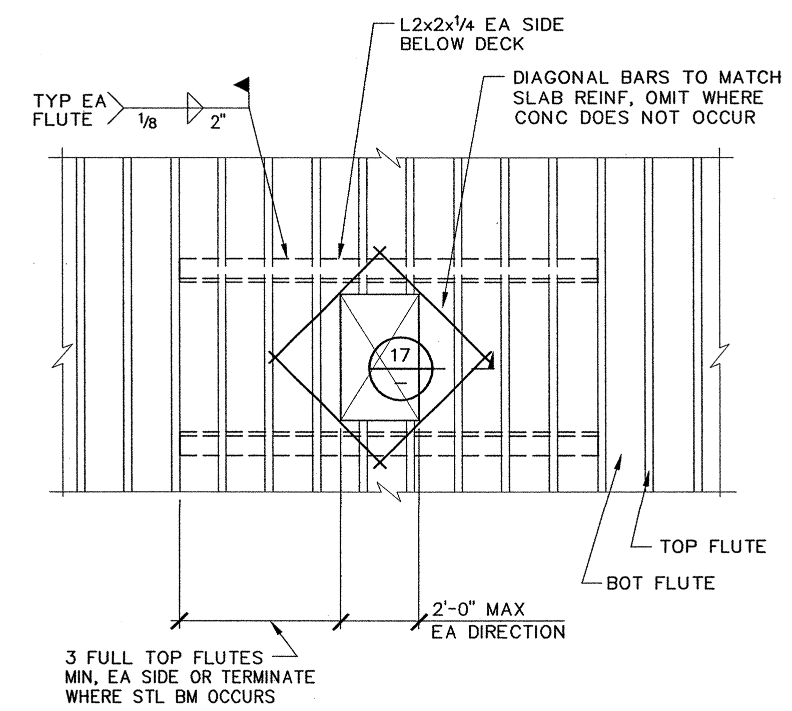

10 MEDIUM OPENING IN STEEL DECK PLAN
1/2"=1'-0"

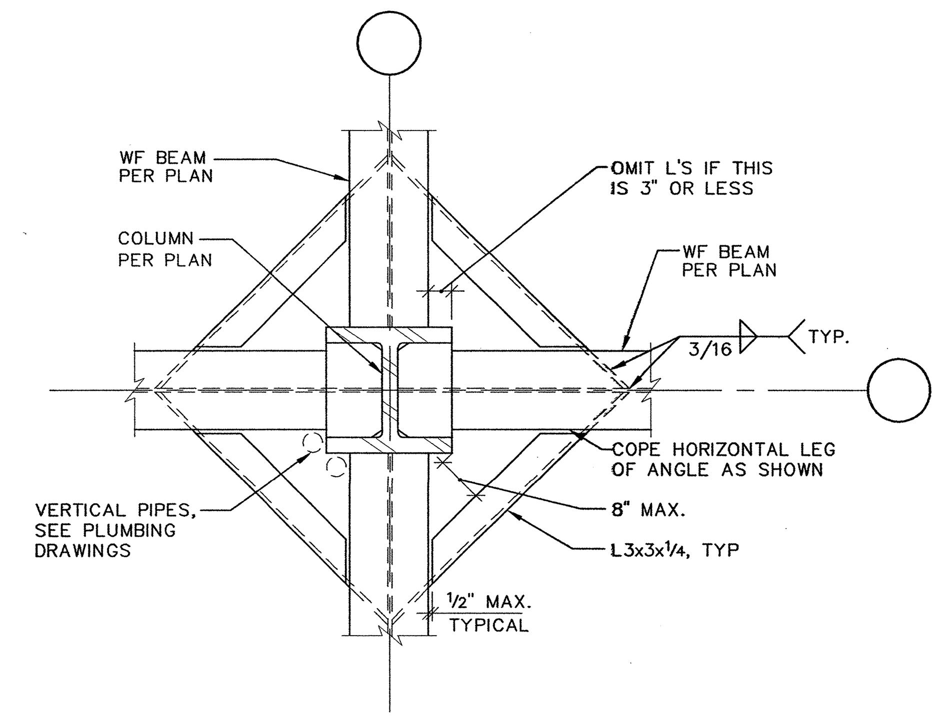

6 STEEL DECK SUPPORT AT INTERIOR COLUMN
1"=1'-0"

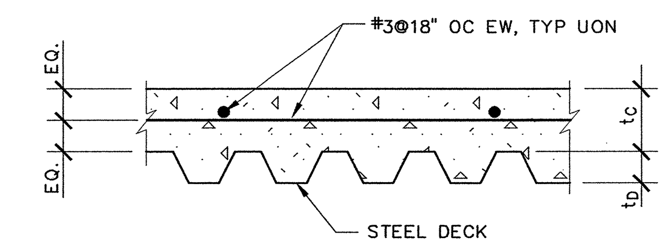

MARK	DECK TYPE & GAUGE	VENTED	tc / tD	STEEL DECK ONLY I(in⁴)	+S(in³)	-S(in³)	DECK ATTACHMENT SUPPORT MEMBERS	PARALLEL MEMBERS	SIDE LAPS
D1	VERCO W2 18 GA.	YES	3 1/4" / 2"	0.555	0.510	0.511	WELD D	WELD A	B.P.
D2	VERCO N-24 16 GA.	NO	NA / 3"	1.647	0.950	1.005	WELD C	WELD A	WELD B
D3	VERCO HSB-36 18 GA.	NO	NA / 1 1/2"	0.302	0.322	0.335	WELD D	WELD A	WELD B
D4	VERCO B 18 GA.	YES	2" / 1 1/2"	0.302	0.322	0.335	WELD D	WELD A	B.P.

ATTACHMENT LEGEND:
WELD A: 1/2"Φ PUDDLE WELD @ 12" OC
WELD B: 1 1/2" TOP SEAM WELD @ 12" OC
WELD C: 1/2" PUDDLE WELD (24/4 PATTERN)
WELD D: 1/2" PUDDLE WELD (36/4 PATTERN)
B.P.: BUTTON PUNCH @ 12" OC

3 STEEL DECK SCHEDULE

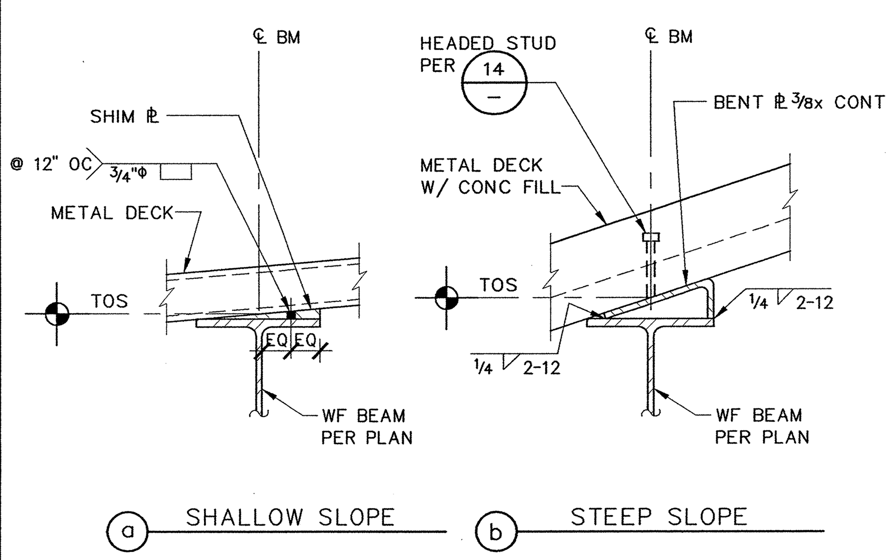

19 SLOPPED METAL DECK
1 1/2"=1'-0"

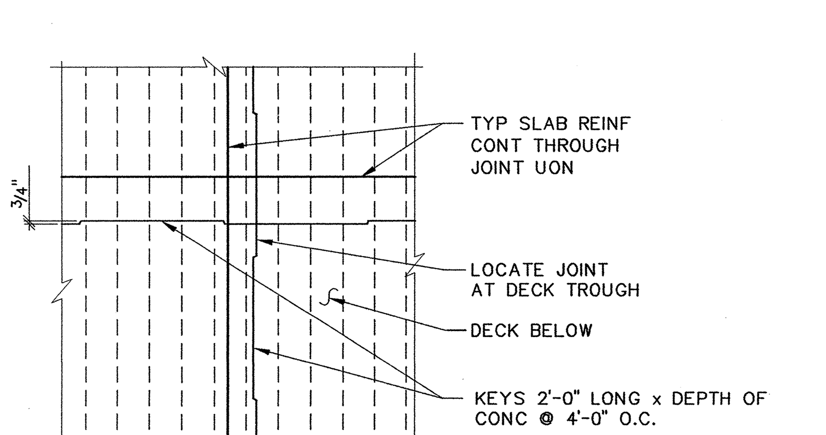

15 CONSTRUCTION JOINT AT CONCRETE FILL OVER STEEL DECK
NTS

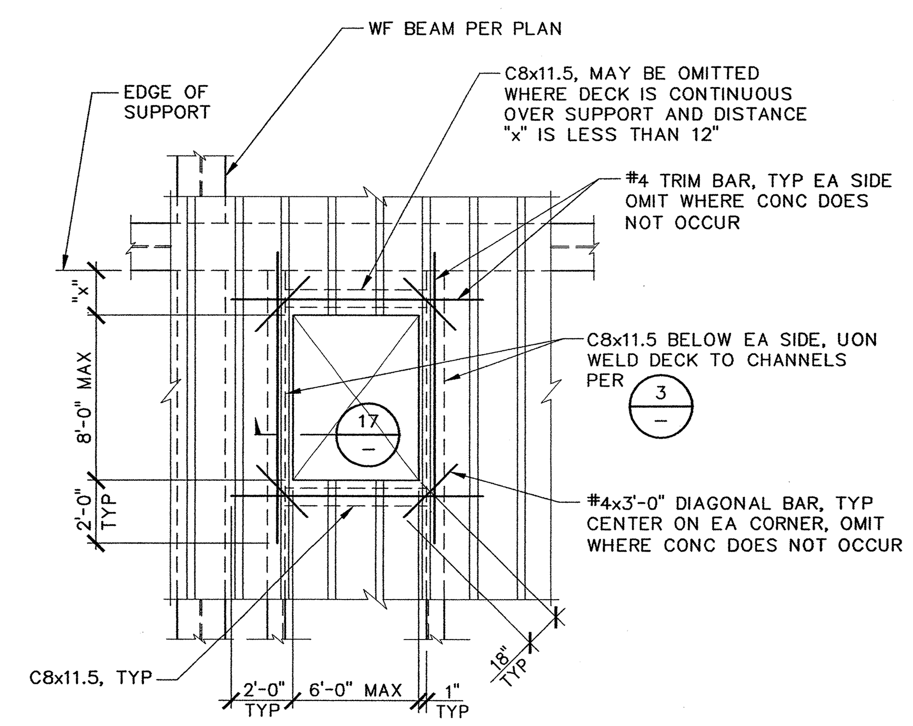

11 LARGE OPENING IN STEEL DECK PLAN
NTS

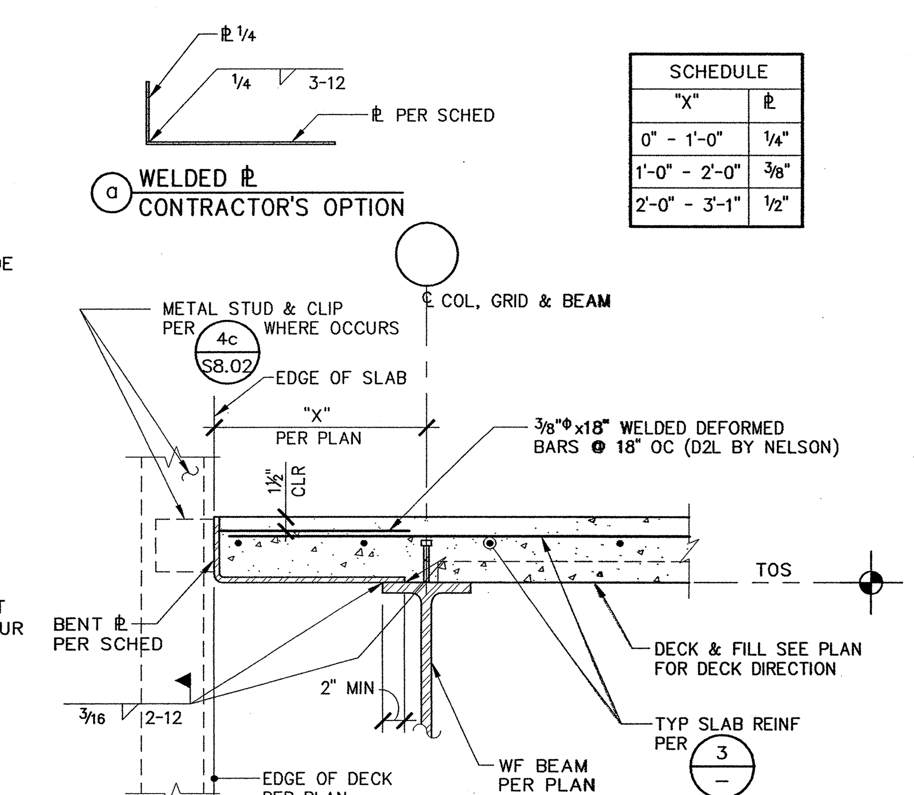

SCHEDULE	
"X"	ℙ
0" - 1'-0"	1/4"
1'-0" - 2'-0"	3/8"
2'-0" - 3'-1"	1/2"

7 EDGE OF DECK W/ CONC FILL EXTERIOR
1"=1'-0"

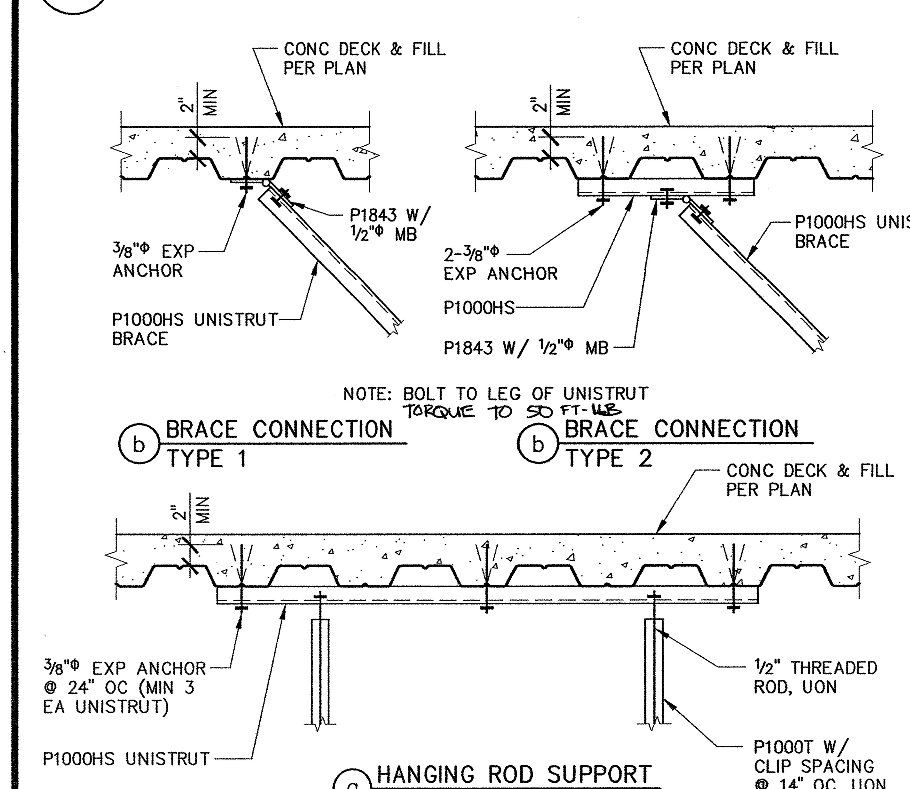

20 EQUIPMENT SUPPORT BELOW CONCRETE DECK & FILL
1"=1'-0"

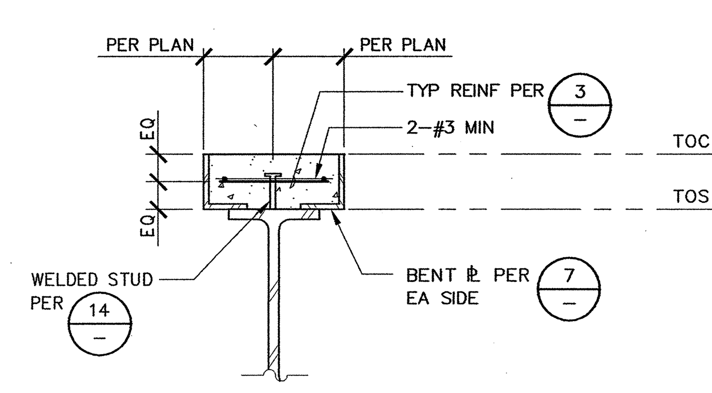

FOR INFO NOT SHOWN OR NOTED SEE DETAIL 7

16 EDGE OF SLAB BETWEEN SHAFTS AND AT EXTERIOR STAIRS
1"=1'-0"

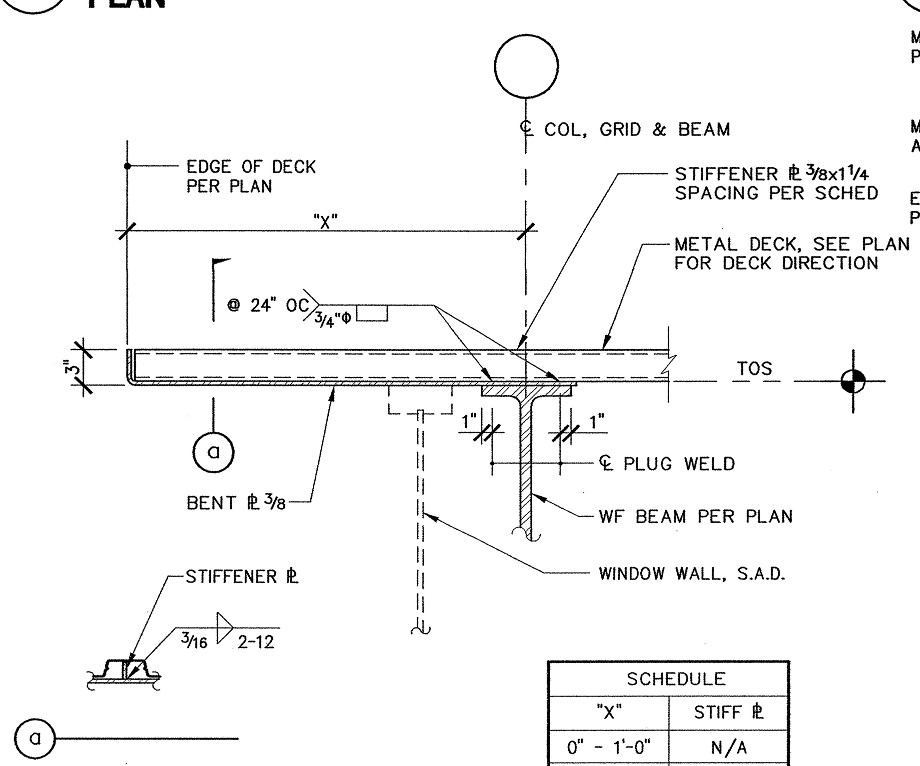

SCHEDULE	
"X"	STIFF ℙ
0" - 1'-0"	N/A
1'-0" - 3'-0"	@ 4'-0" OC

12 EDGE OF DECK W/O CONC FILL EXTERIOR AT ROOF EAVE
1"=1'-0"

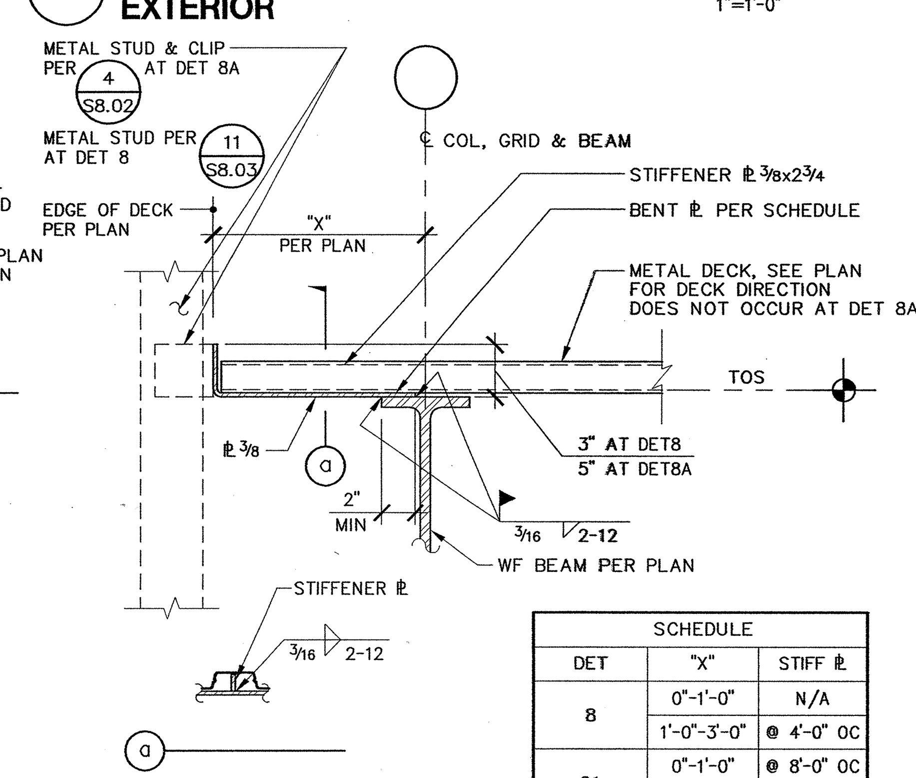

SCHEDULE		
DET	"X"	STIFF ℙ
8	0"-1'-0"	N/A
	1'-0"-3'-0"	@ 4'-0" OC
8A	0"-1'-0"	@ 8'-0" OC
	1'-0"-3'-0"	@ 4'-0" OC

8 8A EDGE OF DECK W/O CONC FILL EXTERIOR AT PARAPET
1"=1'-0"

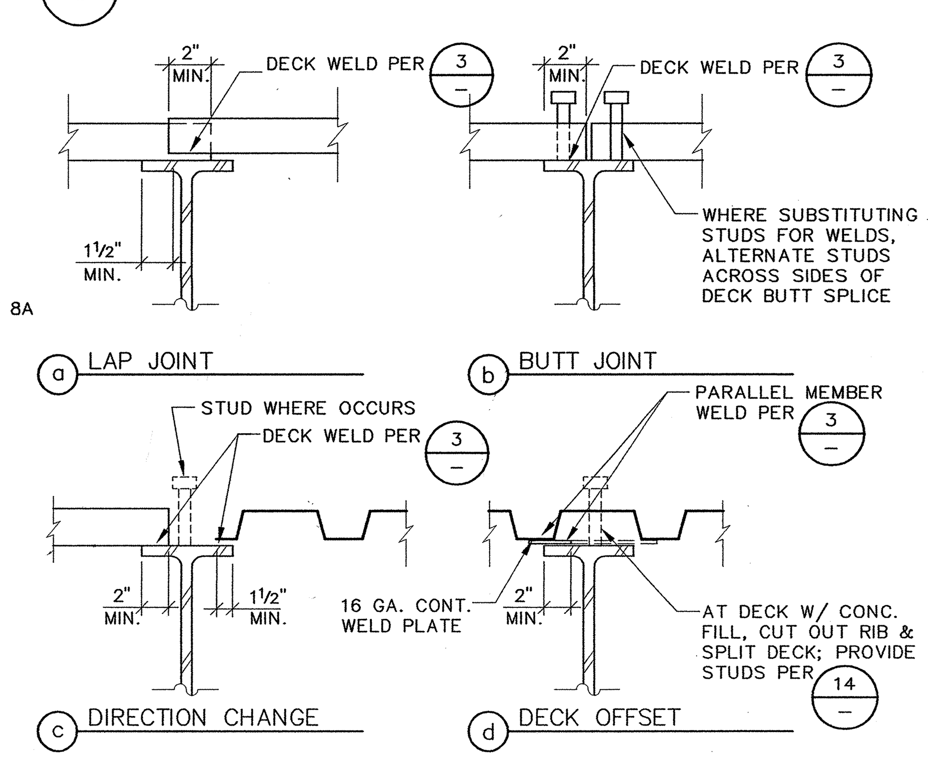

FOR INFO NOT SHOWN OR NOTED SEE 3

4 TYPICAL DECK WELDING DETAILS
NTS

APPROVAL STAMP
IDENTIFICATION STAMP
DIVISION OF THE STATE ARCHITECT
APPL 02- 107417
AC ___ FLS ___ SS [signature]
DATE: 12/21/05

NO.	ISSUED FOR	DATE
1	DSA APPROVAL SET	12/08/05

REGISTERED PROFESSIONAL ENGINEER JOSEPH R. SUTTON NO. 2185 Exp. 12-31-05 STRUCTURAL STATE OF CALIFORNIA

CERTIFIED BY

K M D
KAPLAN McLAUGHLIN DIAZ
ARCHITECTURE PLANNING
222 VALLEJO SAN FRANCISCO, CA 94111
(415) 398-5191 FAX (415) 394-7158

DASSE

SOLANO COMMUNITY COLLEGE

SCCD
VALLEJO CENTER
Contract # A003.6123.01.V1

PROJECT NO. 419-201 | DATE 12-08-05

STEEL DECK DETAILS
AS BUILTS

S7.02

PLOT DATE:

COPYRIGHT © 2004 BY KMD (KAPLAN McLAUGHLIN DIAZ). ALL RIGHTS RESERVED.

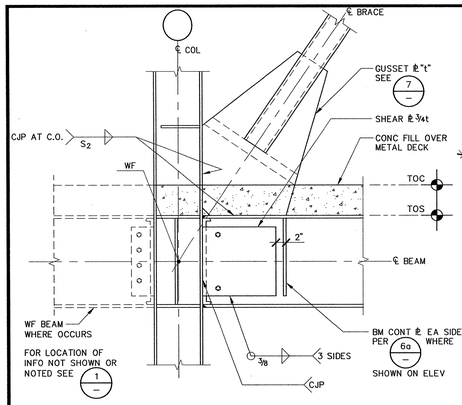

17 BRACE AT COLUMN ABOVE BEAM

1"=1'-0"

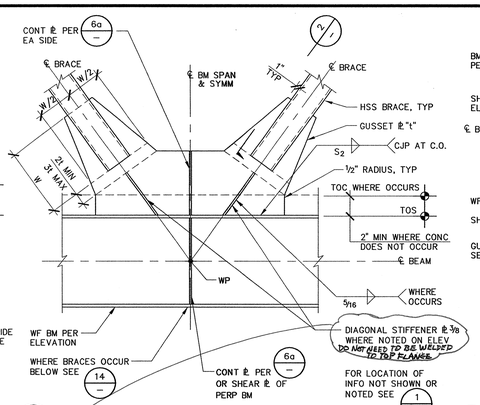

13 BRACES ABOVE BEAM AT MIDSPAN

1"=1'-0"

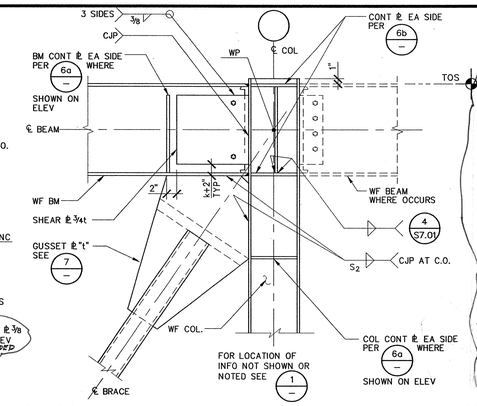

9 BRACE AT COLUMN BELOW BEAM STRONG AXIS

1"=1'-0"

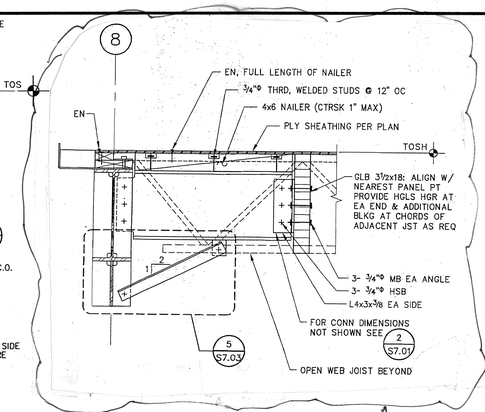

5 BRACED FRAME BEAM BRACING

BRACE	GUSSET ℄		WELD		REINF. SECTION
	t (in.)	w (in.)	S_1 (in.)	S_2 (in.)	
HSS6.625x0.500	1¼	18	⅜	1 11/16	HSS7.000x0.375
HSS7.00x0.500	1¼	18	⅜	1 11/16	HSS7.500x0.500

NOTES:

1. SEE GENERAL NOTES ON SHEET S1.01.
2. WELD LENGTHS NOTED IN SCHEDULE ARE TO BE WELDED ON EACH SIDE OF GUSSET PLATE AND EACH SIDE OF BRACE, WHERE APPLICABLE.
3. FOR BRACE SIZES SEE FRAME ELEVATIONS. BRACE END TO BE CUT PERPENDICULAR TO BRACE CENTERLINE.
4. WELD METAL USED FOR THE WELDS SHOWN ON THIS SHEET SHALL BE RATED FOR CHARPY V-NOTCH (CVN) VALUES OF 20 FT-LBS AT MINUS 20° F. SEE SPECIFICATIONS FOR MORE INFORMATION.
5. FOR TYPICAL BRACE, GUSSET, AND CONN INFO, SEE 7
6. REINF IS REQUIRED AT EA END OF BRACE AT ALL SLOTTED BRACE CONDITIONS. SEE 2
7. MAX (1) ½"ø ERECTION BOLT EA. END OF BRACE.
8. NO ADDITIONAL SLOTS OR HOLES PERMITTED IN BRACES. NO ATTACHMENTS (SUCH AS WELDS OR SHOT-IN PINS) TO BRACES ARE PERMITTED IN THE MIDDLE 1/3 OF LENGTH OR IN REINFORCED AREAS. NO SUCH ATTACHMENTS PERMITTED TO GUSSETS.
9. FOR CONTINUITY PLATE INFO, SEE 6

1 BRACED FRAME CONNECTION SCHEDULE AND NOTES

NONE

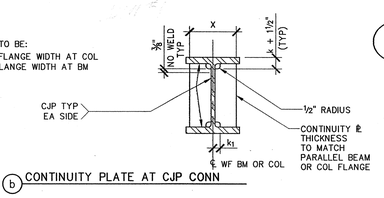

b CONTINUITY PLATE AT CJP CONN

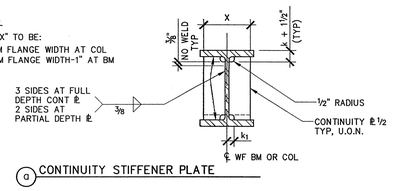

a CONTINUITY STIFFENER PLATE

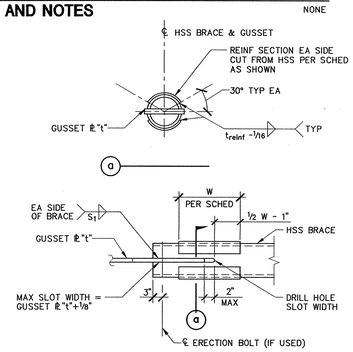

2 BRACED REINFORCEMENT DETAIL

N.T.S.

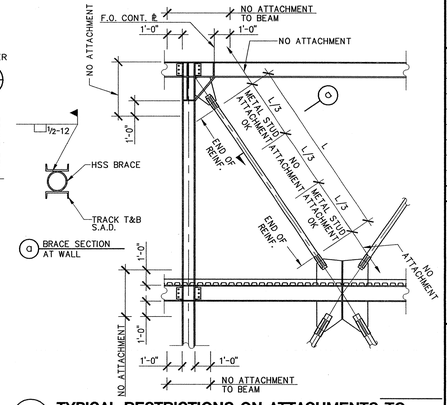

3 TYPICAL RESTRICTIONS ON ATTACHMENTS TO STRUCTURAL STEEL AT BRACED FRAMES

N.T.S.

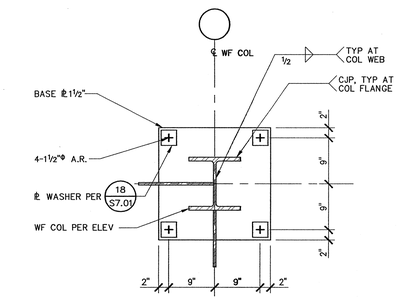

15 BRACED FRAME BASE PLATE DETAIL

1"=1'-0"

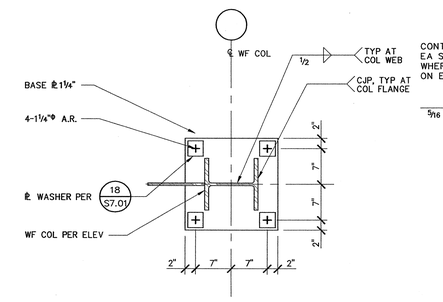

11 BRACED FRAME BASE PLATE DETAIL

1"=1'-0"

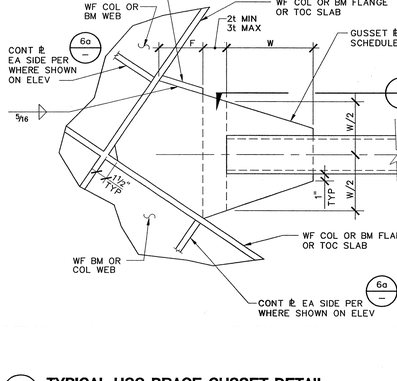

6 BRACE FRAME CONTINUITY PLATES

NTS

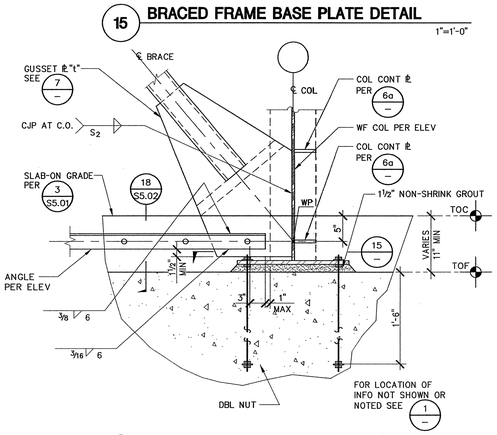

16 BRACE AT COLUMN / FOUNDATION WEAK AXIS

1"=1'-0"

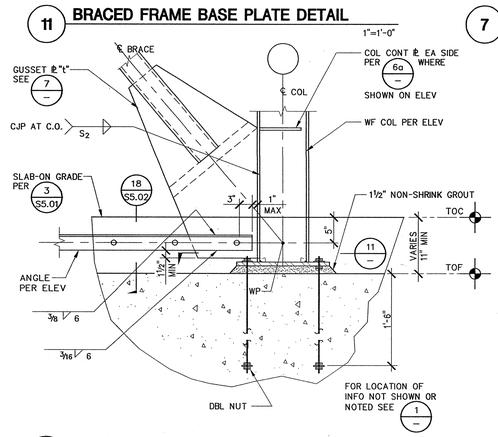

12 BRACE AT COLUMN / FOUNDATION STRONG AXIS

1"=1'-0"

7 TYPICAL HSS BRACE GUSSET DETAIL

NTS

APPROVAL STAMP
IDENTIFICATION STAMP
DIVISION OF THE STATE ARCHITECT
APPL 02- 107417
AC ____ FLS ____ SS
DATE: 12/21/05

NO.	ISSUED FOR	DATE
1	DSA APPROVAL SET	12/08/05

CERTIFIED BY
REGISTERED PROFESSIONAL ENGINEER JOSEPH R. STEVENS NO. 21825 EXP. 12-31-05 STRUCTURAL STATE OF CALIFORNIA

K M D
KAPLAN McLAUGHLIN DIAZ
ARCHITECTURE PLANNING
222 VALLEJO SAN FRANCISCO, CA 94111
(415) 398-5191 FAX (415) 394-7158

DASSE

SOLANO COMMUNITY COLLEGE

SCCD
VALLEJO CENTER
Contract # A003.6123.01.V1

PROJECT NO. 419-201 | DATE 12-08-05

STEEL BRACED FRAME DETAILS
AS BUILTS

S7.03

PLOT DATE:

COPYRIGHT © 2004 BY KMD (KAPLAN McLAUGHLIN DIAZ). ALL RIGHTS RESERVED.

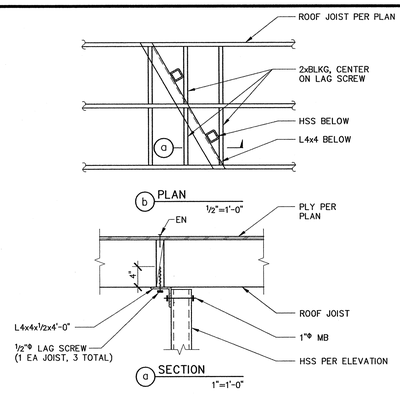

17 ELEVATOR RAIL SUPPORT AT ROOF

AS NOTED

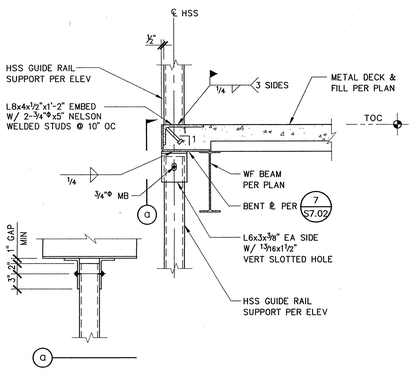

18 ELEVATOR RAIL SUPPORT AT FLOOR

1"=1'-0"

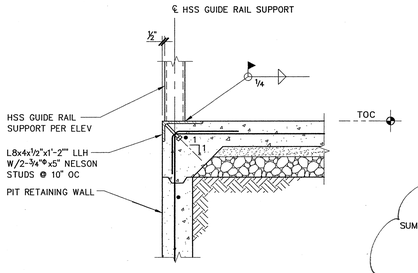

19 ELEVATOR RAIL SUPPORT AT PIT

1"=1'-0"

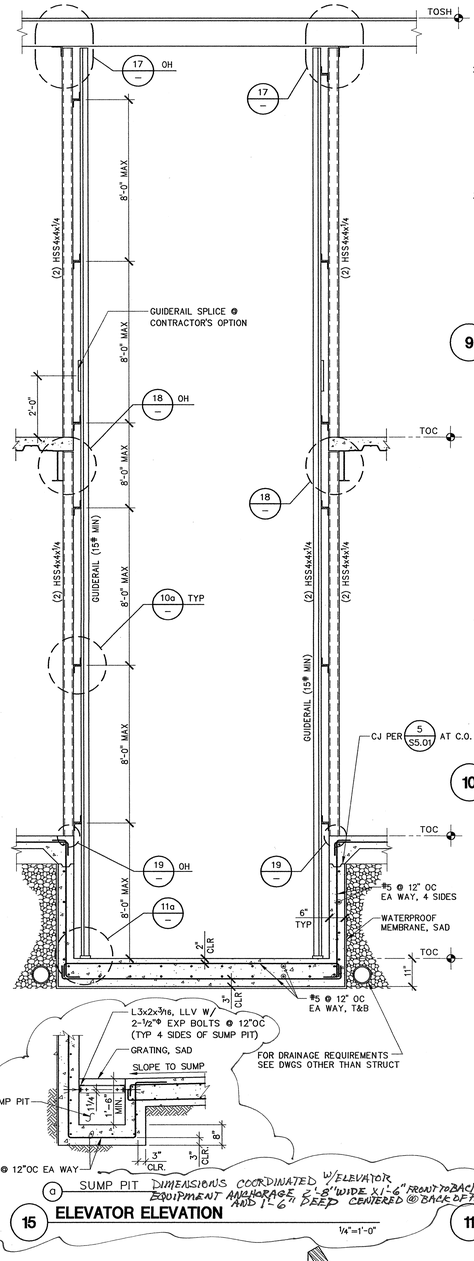

15 ELEVATOR ELEVATION

1/4"=1'-0"

1. THE ELEVATOR MANUFACTURER SHALL BE RESPONSIBLE FOR THE DESIGN, FABRICATION AND INSTALLATION OF ALL SUPPLEMENTAL FRAMING (GUIDE RAILS, SHEAVE BEAMS, RAIL BRACKET SUPPORTS, RETAINER PLATES, INCLUDING ALL CONNECTIONS AND SPLICES) REQUIRED TO SUPPORT THE ELEVATOR. ELEVATOR MANUFACTURER SHALL BE RESPONSIBLE FOR COORDINATION WITH THE GENERAL CONTRACTOR AND OTHER SUBCONTRACTORS OF ALL SUPPLEMENTAL ELEVATOR FRAMING.
2. ELEVATOR DETAILS SO NOTED ON THIS SHEET ARE CONCEPTUAL IN NATURE AND ARE FOR BID PURPOSES ONLY. ELEVATOR MANUFACTURER SHALL VERIFY ALL DIMENSIONS AND APPLICABILITY OF DETAILS SHOWN ON THIS SHEET. ELEVATOR MANUFACTURER SHALL RETAIN A STRUCTURAL ENGINEER, LICENSED IN CALIFORNIA, TO DESIGN AND DETAIL ALL REQUIRED SUPPLEMENTAL SUPPORT FRAMING AND CONNECTIONS. MANUFACTURER'S STRUCTURAL ENGINEER SHALL STAMP AND SIGN BOTH CALCULATIONS AND INSTALLATION DRAWINGS. CALCULATIONS AND DETAILS SHALL COMPLY WITH THE LOAD CRITERIA AND DETAILING PROVISIONS OF THE 2001 CALIFORNIA BUILDING CODE WITH DSA/SSS AMENDMENTS. SEE SHEET S1.01 FOR STRUCTURAL DESIGN CRITERIA PARAMETERS.
   CAB AND PLUNGER WEIGHT= 4,300 LBS
   CAB CAPACITY = 3,500 LBS
3. PRIOR TO FABRICATION, THE ELEVATOR MANUFACTURER SHALL SUBMIT FOR REVIEW BY THE ARCHITECT, PROJECT STRUCTURAL ENGINEERING AND THE DIVISION OF THE STATE ARCHITECT, CALCULATIONS, INSTALLATION AND FABRICATION DRAWINGS AND MATERIAL SPECIFICATIONS DEMONSTRATING COMPLIANCE WITH CRITERIA STATED ABOVE.

9 ELEVATOR NOTES

NTS

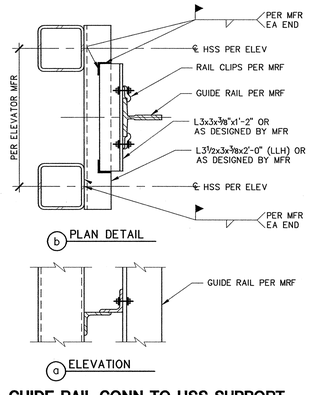

10 GUIDE RAIL CONN TO HSS SUPPORT (CONCEPTUAL DETAIL)

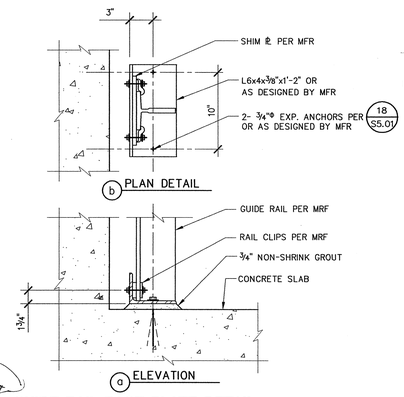

11 GUIDE RAIL BASE PLATE DETAIL (CONCEPTUAL DETAIL)

22 SAFETY GUIDE (RETAINER PLATE) DETAIL (CONCEPTUAL DETAIL)

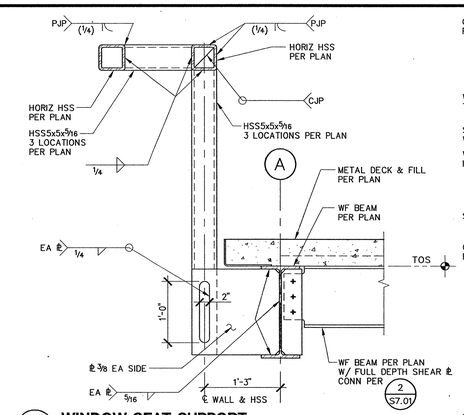

5 WINDOW SEAT SUPPORT C.R. BUILDING

1"=1'-0"

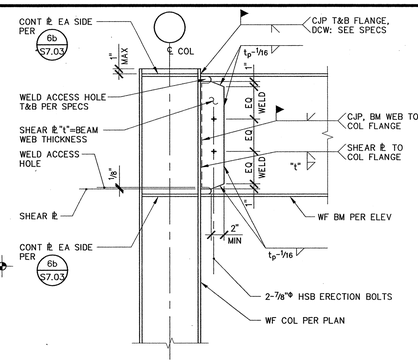

1 MOMENT FRAME CONNECTION

1"=1'-0"

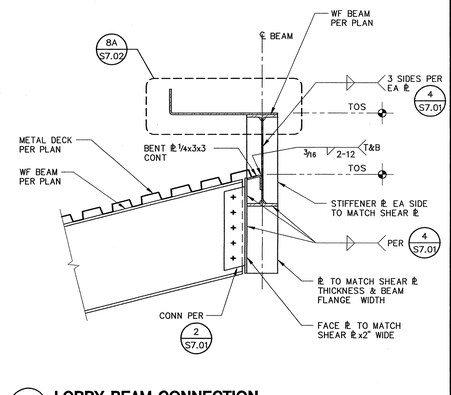

6 WINDOW WALL SUPPORT

1"=1'-0"

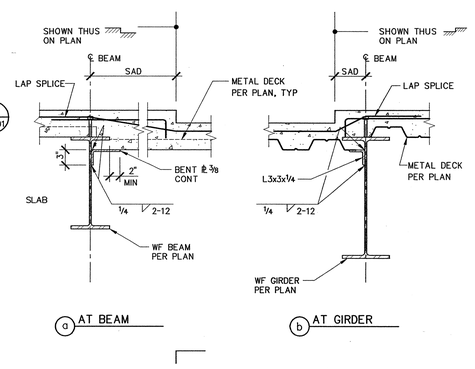

2 LOBBY BEAM CONNECTION C.R. BUILDING

1"=1'-0"

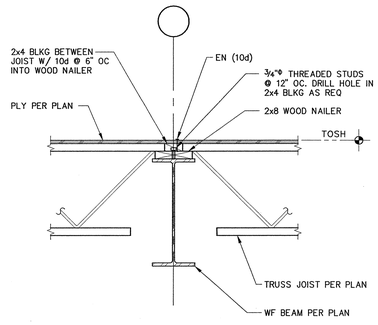

7 STEP/DEPRESSION IN FLOOR C.R. BUILDING

1"=1'-0"

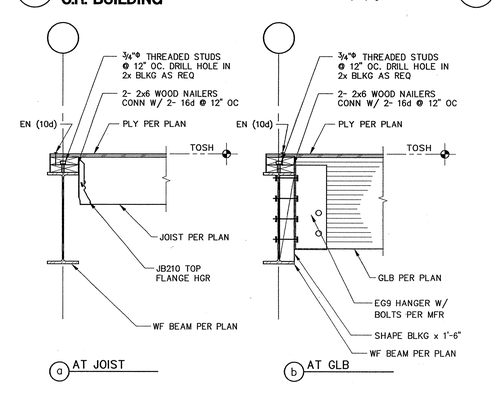

3 TRUSS JOIST AT WF ROOF BEAM C.R. BUILDING

1"=1'-0"

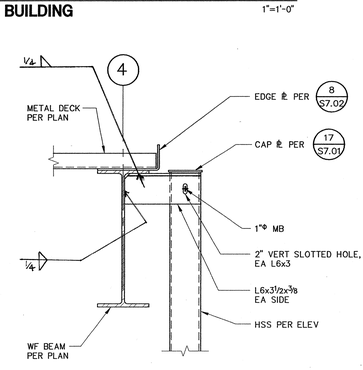

8 GLB/JST AT WF ROOF BEAM

1"=1'-0"

4 HSS POST AT ROOF M.U. BUILDING

1"=1'-0"

APPROVAL STAMP
IDENTIFICATION STAMP
DIVISION OF THE STATE ARCHITECT
APPL 02- 107417
AC ____ FLS ____ SS ____
DATE: 12/21/05

NO.	ISSUED FOR	DATE
1	DSA APPROVAL SET	12/08/05

CERTIFIED BY

JOSEPH R. SUTTER, NO. 2145, EXP. 12-31-05, STRUCTURAL, STATE OF CALIFORNIA, REGISTERED PROFESSIONAL ENGINEER

K M D
KAPLAN McLAUGHLIN DIAZ
ARCHITECTURE PLANNING
222 VALLEJO SAN FRANCISCO, CA 94111
(415) 398-5191 FAX (415) 394-7158

DASSE

SOLANO COMMUNITY COLLEGE

SCCD
VALLEJO CENTER
Contract # A003.6123.01.V1

PROJECT NO. 419-201
DATE 12-08-05

STEEL DETAILS

AS BUILTS

S7.04

PLOT DATE:

COPYRIGHT © 2004 BY KMD (KAPLAN McLAUGHLIN DIAZ). ALL RIGHTS RESERVED.

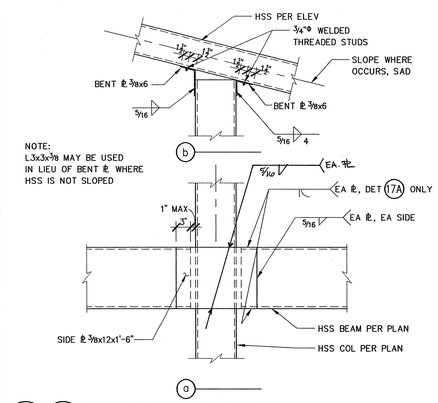

17 17A WALL SUPPORT FRAMING

1"=1'-0"

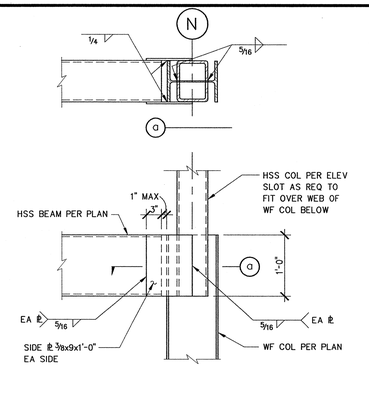

13 COLUMN SPLICE

1"=1'-0"

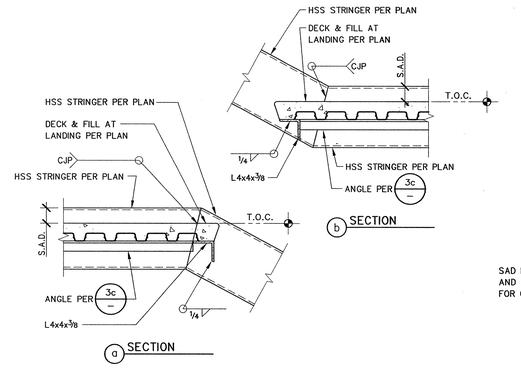

9 HSS STRINGER CONNECTION

1"=1'-0"

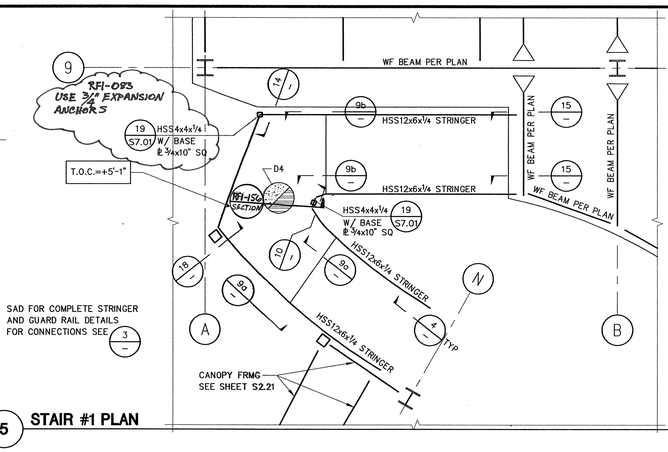

5 STAIR #1 PLAN

1/4"=1'-0"

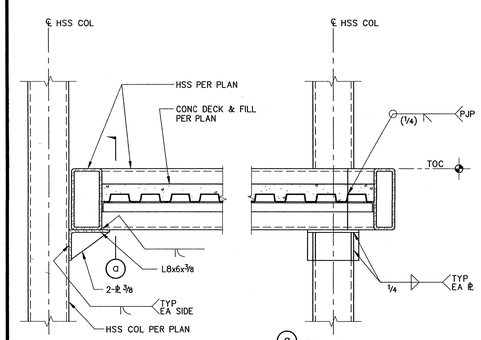

18 HSS STRINGER CONNECTION

1"=1'-0"

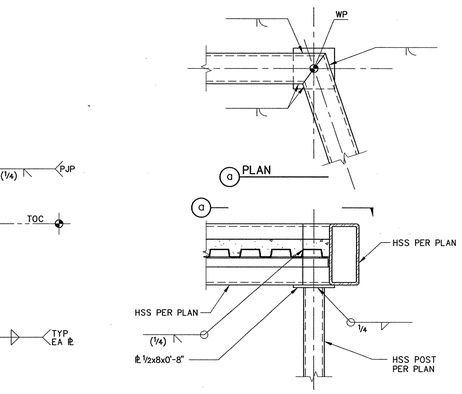

14 HSS STRINGER CONNECTION

1"=1'-0"

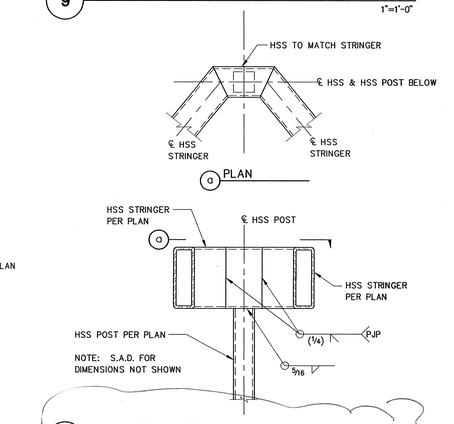

10 HSS STRINGER CONNECTION

SEE MORITY DETAIL BELOW

1"=1'-0"

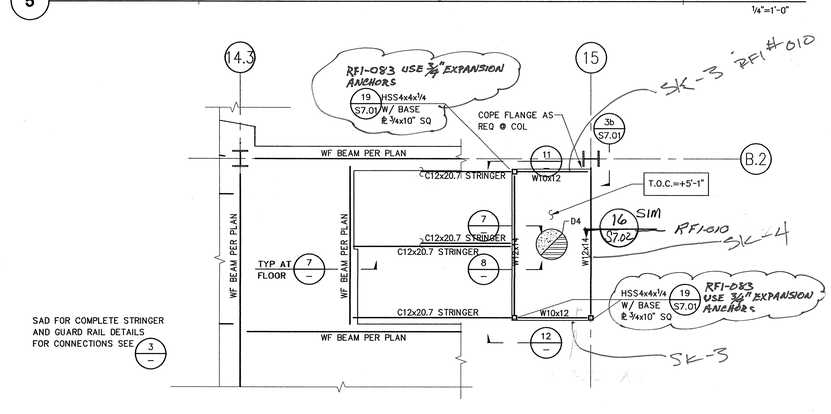

6 STAIR #2 PLAN

1/4"=1'-0"

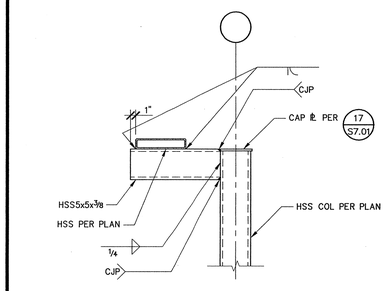

19 WALL SUPPORT FRAMING

1"=1'-0"

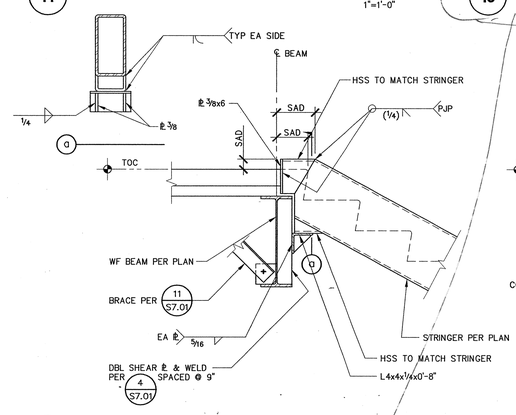

15 STAIR STRINGER CONNECTION AT FLOOR

1"=1'-0"

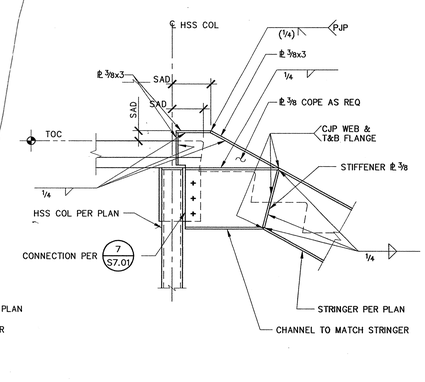

11 STAIR STRINGER CONNECTION AT FLOOR / LANDING COLUMN

1"=1'-0"

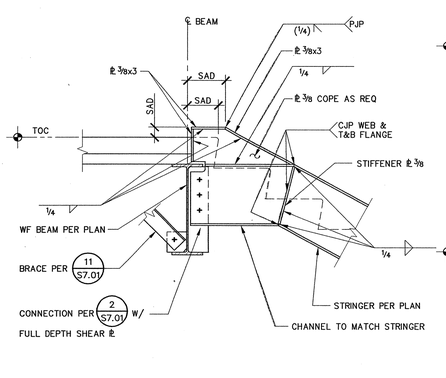

7 STAIR STRINGER CONNECTION AT FLOOR / LANDING BEAM

1"=1'-0"

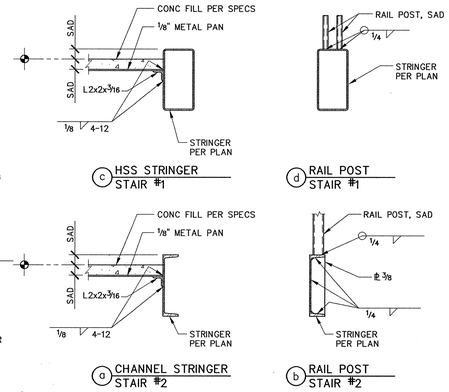

3 STAIR TREAD & RAIL POST CONNECTION

1"=1'-0"

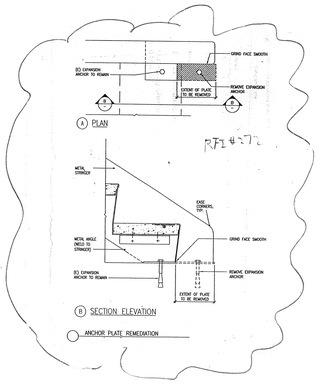

19 WALL SUPPORT FRAMING

1"=1'-0"

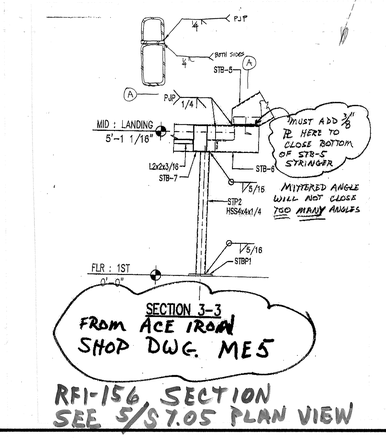

15 STAIR STRINGER CONNECTION AT FLOOR

1"=1'-0"

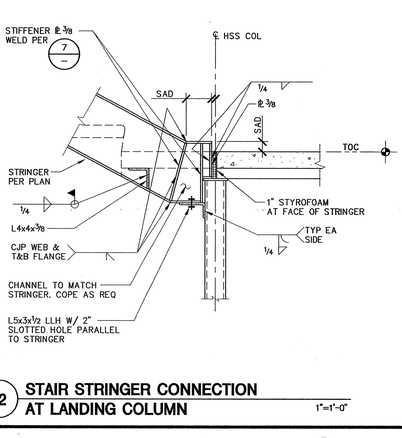

12 STAIR STRINGER CONNECTION AT LANDING COLUMN

1"=1'-0"

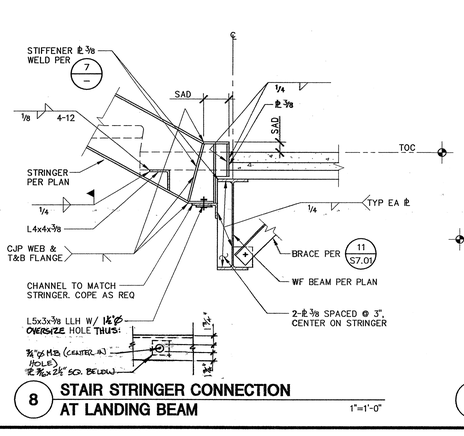

8 STAIR STRINGER CONNECTION AT LANDING BEAM

1"=1'-0"

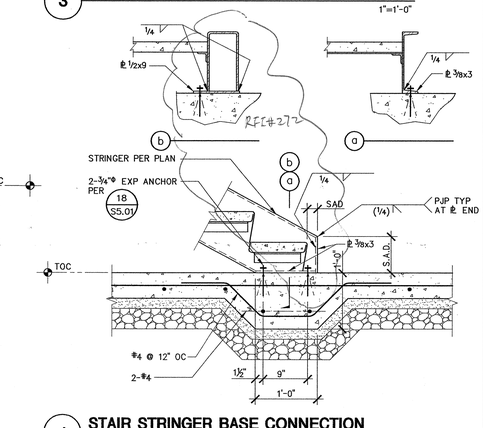

4 STAIR STRINGER BASE CONNECTION AT LANDING

1"=1'-0"

APPROVAL STAMP

IDENTIFICATION STAMP
DIVISION OF THE STATE ARCHITECT
APPL 02- 107417
AC ____ FLS ____ SS VL
DATE: 12/21/05

NO.	ISSUED FOR	DATE
1	DSA APPROVAL SET	12/08/05

REGISTERED PROFESSIONAL ENGINEER KEITH R. STEIN No. 2185 Exp. 12-31-05 STRUCTURAL STATE OF CALIFORNIA

CERTIFIED BY

K M D
KAPLAN McLAUGHLIN DIAZ
ARCHITECTURE PLANNING
222 VALLEJO SAN FRANCISCO, CA 94111
(415) 398-5191 FAX (415) 394-7158

DASSE

SOLANO COMMUNITY COLLEGE

SCCD
VALLEJO CENTER
Contract # A003.6123.01.V1

PROJECT NO. 419-201
DATE 12-08-05

STEEL DETAILS

AS BUILTS

S7.05

FILE: E:\2004 Jobs\04B176\Struct\04B176S705.dwg07/12/05 at 16:08
XREF: \04B176S_TB.dwg
XREF: 04B176S2211_S222.dwg
XREF: 04B176S2211_S222.dwg
XREF: a-1p02.dwg

PLOT DATE:

COPYRIGHT © 2004 BY KMD (KAPLAN McLAUGHLIN DIAZ). ALL RIGHTS RESERVED.

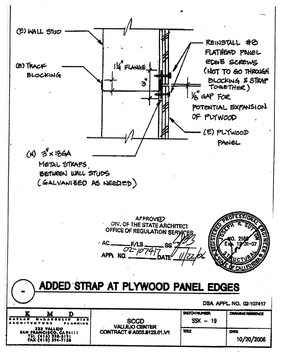

1 ADDED STRAP AT PLYWOOD PANEL EDGES

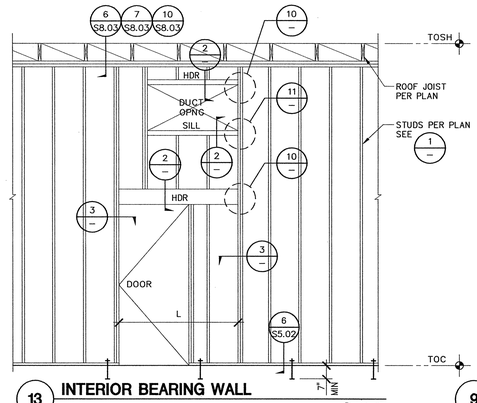

13 INTERIOR BEARING WALL

3/8"=1'-0"

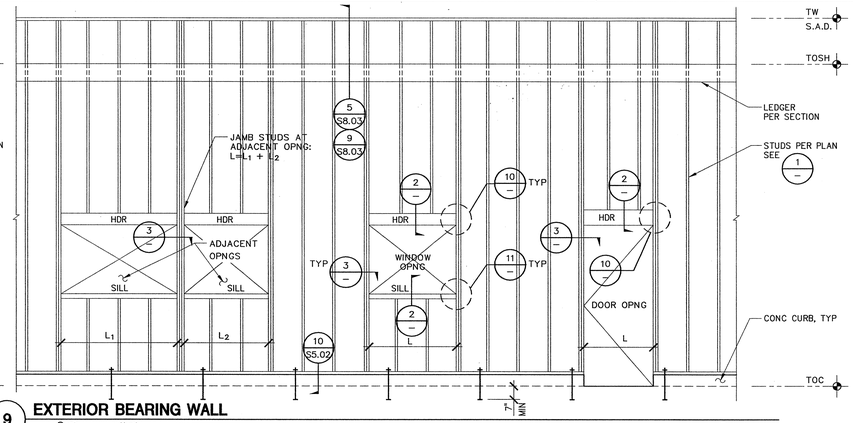

9 EXTERIOR BEARING WALL

RFI-117

3/8"=1'-0"

METAL STUD SCHEDULE					
REF.: STEEL STUD MANUFACTURER'S ASSOCIATION (ICBO 4943P)					
NOMINAL SIZE	CATALOG SIZE	MINIMUM PROPERTIES Ix (in⁴)	Sx (in³)	Ma (in-k)	COMMENTS
STRUCTURAL WALL STUDS					
4" x 18GA	400S162-43	0.892	0.443	9.63	
4" x 16GA	400S162-54	1.098	0.533	15.96	
6" x 18GA	600S162-43	2.316	0.767	16.68	TYP STUD U.O.N.
6" x 16GA	600S162-54	2.860	0.927	27.76	
8" x 18GA	800S162-43	4.633	1.158	22.89	
8" x 16GA	800S162-54	5.736	1.397	41.84	
STRUCTURAL WALL TRACKS(1)					
4" x 18GA	400T200-43	0.811	0.311	6.14	
4" x 16GA	400T200-54	1.037	0.397	11.88	
6" x 18GA	600T200-43	2.076	0.565	11.16	TYP TRACK U.O.N.
6" x 16GA	600T200-54	2.641	0.717	21.48	
8" x 18GA	800T200-43	4.230	0.741	14.63	
8" x 16GA	800T200-54	5.353	0.962	28.79	
10" x 16GA	1000T200-54	9.402	1.181	35.36	FOR BACKING AT LEDGER

NOTES:
(1) USE TRACK DEPTH & GAGE TO MATCH WALL STUDS
(2) PROVIDE CRC BRIDGING AT ALL UNSHEATHED WALLS (STRUCTU... PARTITIONS). SEE DETAIL 16.

1 METAL STUD SCHEDULE

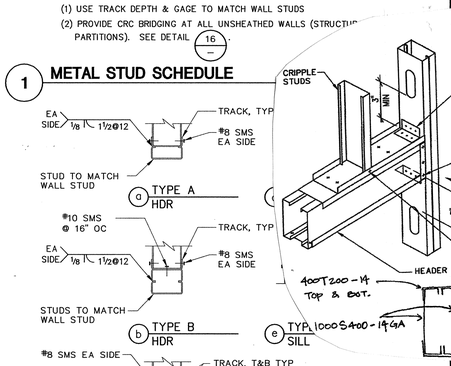

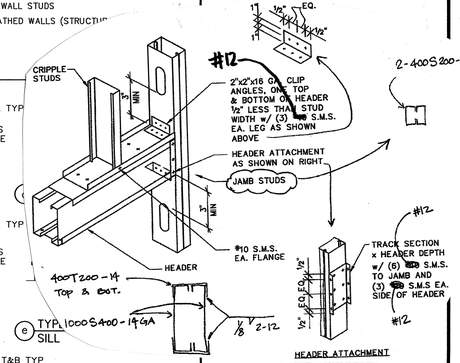

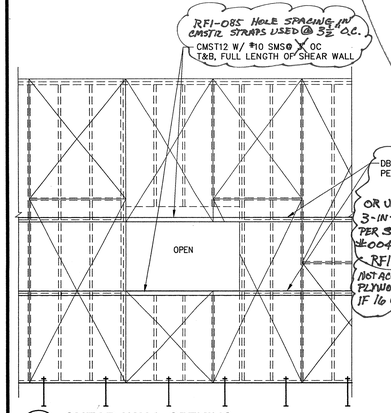

18 SHEAR WALL OPENING

3/8"=1'-0"

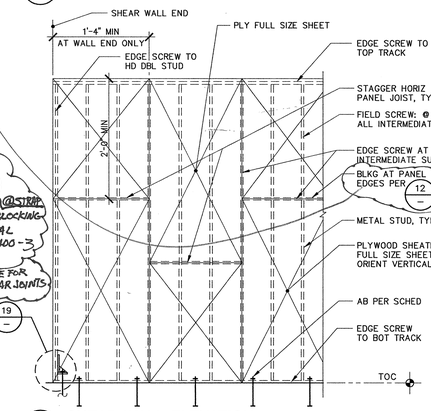

14 SHEAR WALL ELEVATION

3/8"=1'-0"

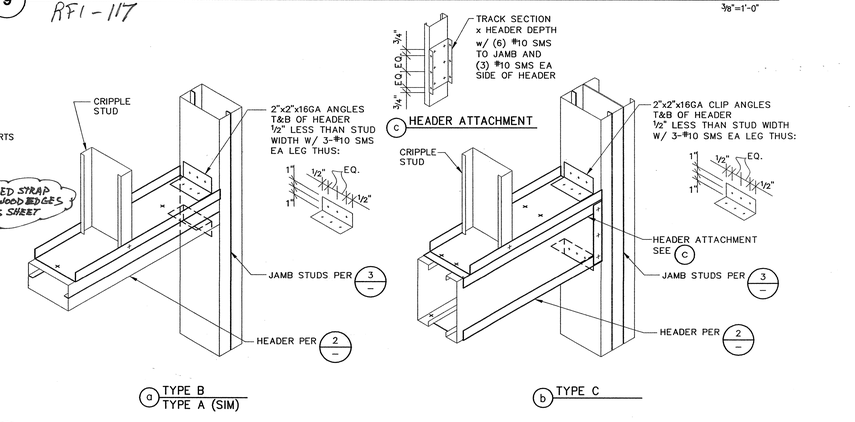

10 HEADER AND JAMB CONNECTION

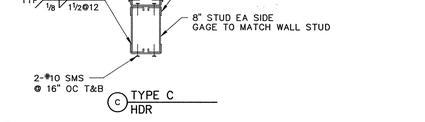

2 HEADERS & SILLS

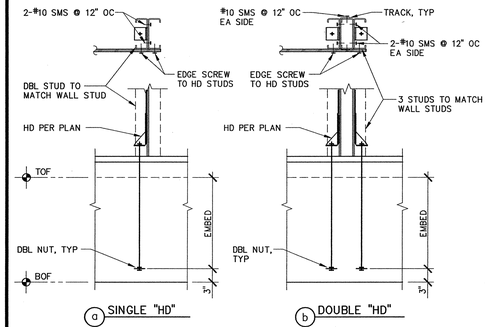

SHEAR WALL SCHEDULE		
	ANCHOR BOLT (℄ OF WALL)	SHEAR SCREWS
SHEARWALL SYMBOL	ANCHOR BOLT	SHEAR SCREWS
4	¾"Ø @ 4'-0" O.C.	#12 WS @ 10" OC
3	¾"Ø @ 2'-8" O.C.	#12 WS @ 8" OC
2	¾"Ø @ 2'-8" O.C.	#12 WS @ 5" OC
1	¾"Ø @ 1'-4" O.C.	#12 WS @ 5" OC

NOTES:
1. USE NO. 8 x 1" FLAT HEAD SCREWS.
2. ◇ NUMBER SHOWN IN SYMBOL REPRESENTS PLYWOOD PANEL EDGE SCREW SPACING IN INCHES.
3. SEE DETAIL 14 FOR SHEAR WALL ELEVATION.
4. SEE DETAIL 18 FOR OPENINGS IN SHEAR WALL.

HOLDOWN	A.B. Ø	EMBED.
S/HD8	7/8"	12"
S/HD10	7/8"	12"
S/HD15	1"	12"

19 HOLDOWN DETAIL

15 SHEAR WALL SCHEDULE

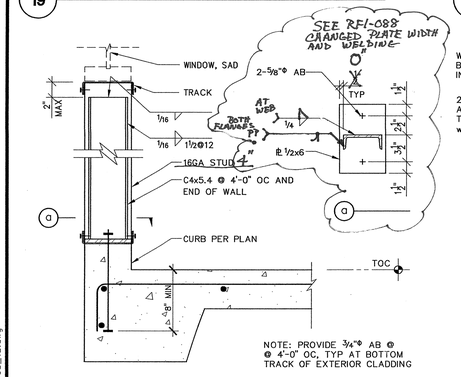

20 EXTERIOR CLADDING AT SLAB-ON-GRADE

1½"=1'-0"

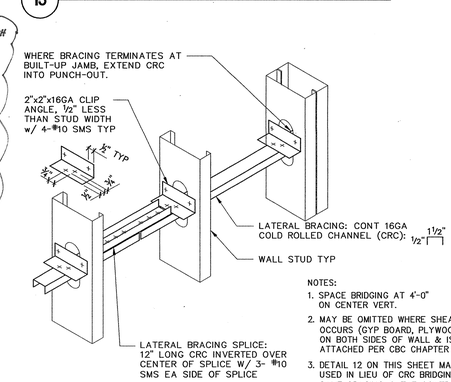

16 CRC BRIDGING

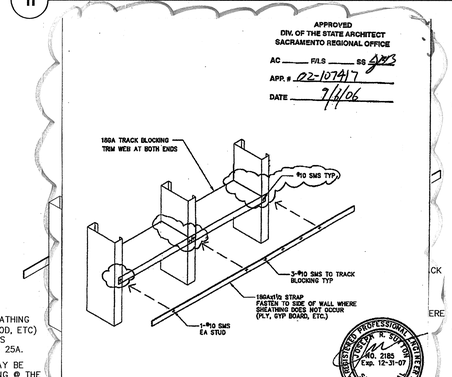

11 SILL AND JAMB CONNECTION

12 STUD BLOCKING
S8.01

DSA APPL. NO. 02-107417

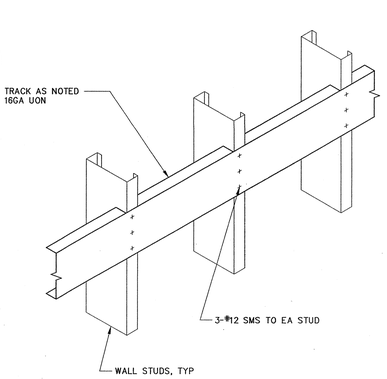

8 NOTCHED TRACK BACKING

OPENING SCHEDULE				
WALL TYPE	L	HEADER	SILL	JAMB(1)
STRUCTURAL WALL	0'-0" - 4'-0" 4'-1" - 8'-0" 8'-0" - 16'-0"	TYPE A TYPE B TYPE C	TYPE A TYPE B TYPE B	2-STUDS 2-STUDS 3-STUDS
EXTERIOR CLADDING	0'-0" - 16'-0"	N/A	TYPE A	2-STUDS
INTERIOR PARTITIONS	0'-0" - 8'-0" 8'-0" - 16'-0"	TYPE A TYPE B	TYPE A TYPE B	2-STUDS 3-STUDS

NOTES:
(1) SEE DETAILS a & b FOR CONNECTION OF JAMB STUDS.

3 OPENING SCHEDULE

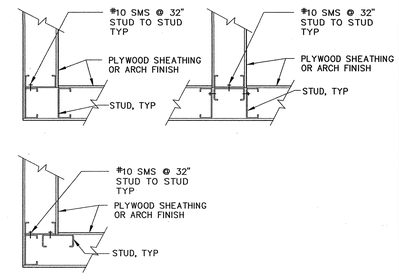

4 TYPICAL CORNERS AND INTERSECTIONS

APPROVAL STAMP
IDENTIFICATION STAMP
DIVISION OF THE STATE ARCHITECT
APPL 02- 107417
AC FLS SS
DATE: 12/21/05

NO.	ISSUED FOR	DATE
1	DSA APPROVAL SET	12/08/05

CERTIFIED BY

REGISTERED PROFESSIONAL ENGINEER JOSEPH R. SUTTON NO. 2185 Exp. 12-31-05 STRUCTURAL STATE OF CALIFORNIA

K M D
KAPLAN McLAUGHLIN DIAZ
ARCHITECTURE PLANNING
222 VALLEJO SAN FRANCISCO, CA 94111
(415) 398-5191 FAX (415) 394-7158

DASSE DESIGN INC.

SOLANO COMMUNITY COLLEGE

SCCD
VALLEJO CENTER
Contract # A003.6123.01.V1

PROJECT NO. 419-201
DATE 12-08-05

WOOD / LT. GAUGE METAL DETAILS
AS BUILTS

S8.01

FILE: E:\2004 Jobs\04B176\Struct\04B176S801.dwg05/1/05 at 10:24
XREF: \04B176S_3D.dwg

PLOT DATE:

COPYRIGHT © 2004 BY KMD (KAPLAN McLAUGHLIN DIAZ). ALL RIGHTS RESERVED.

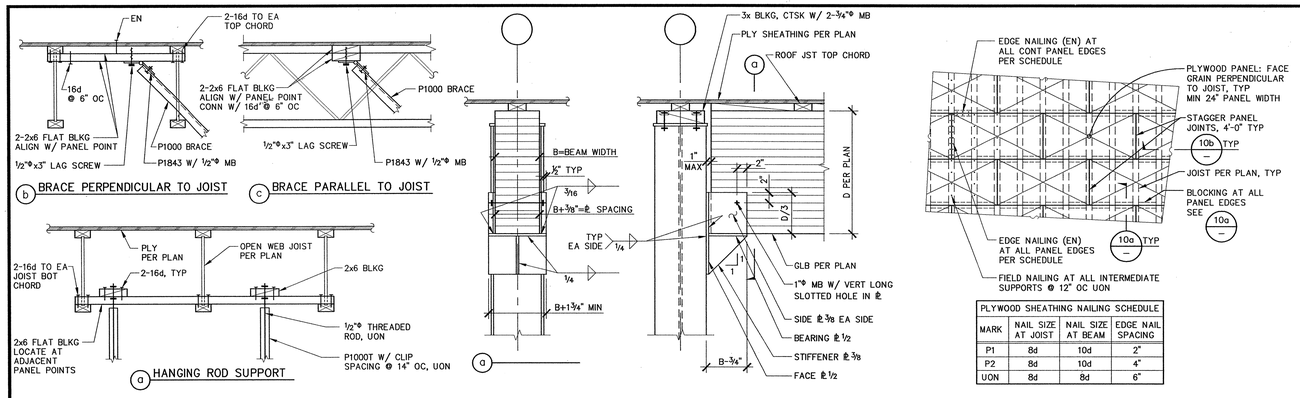

PLYWOOD SHEATHING NAILING SCHEDULE			
MARK	NAIL SIZE AT JOIST	NAIL SIZE AT BEAM	EDGE NAIL SPACING
P1	8d	10d	2"
P2	8d	10d	4"
UON	8d	8d	6"

17 EQUIPMENT SUPPORT BELOW OPEN WEB JOIST

1"=1'-0"

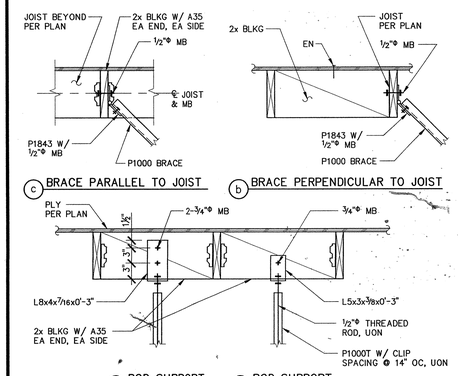

18 EQUIPMENT SUPPORT BELOW WOOD FRAMING

1"=1'-0"

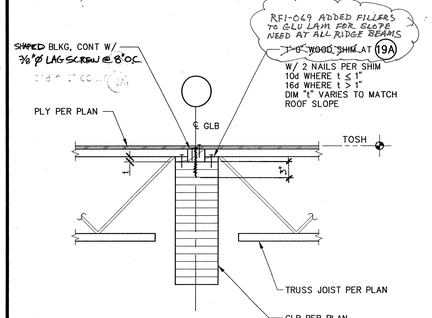

19 19A TRUSS JOIST TO GLB CONNECTION

1"=1'-0"

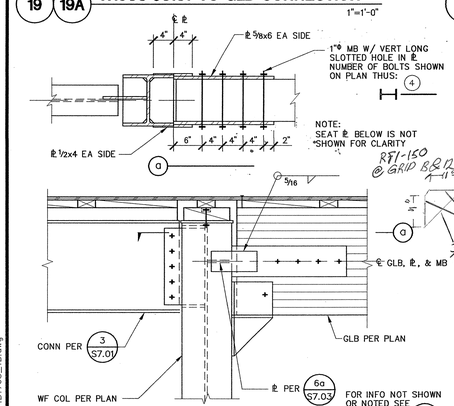

20 GLB TO WF COLUMN CONNECTION

1"=1'-0"

13 GLB TO WF COL CONN

1"=1'-0"

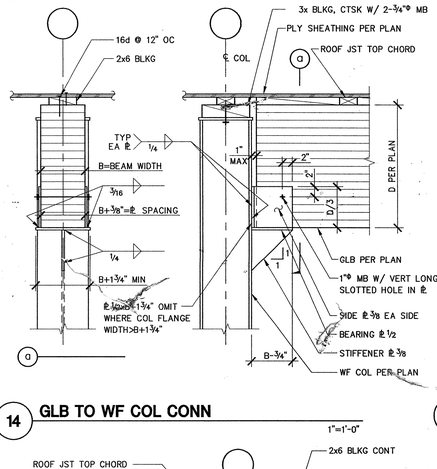

14 GLB TO WF COL CONN

1"=1'-0"

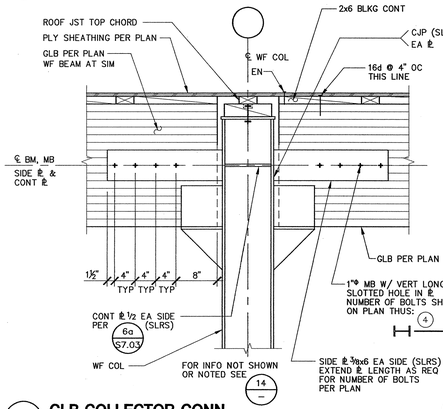

15 GLB COLLECTOR CONN

1"=1'-0"

16 ROOF OPENING BETWEEN JOISTS

½"=1'-0"

9 PLYWOOD SHEATHING AT ROOF

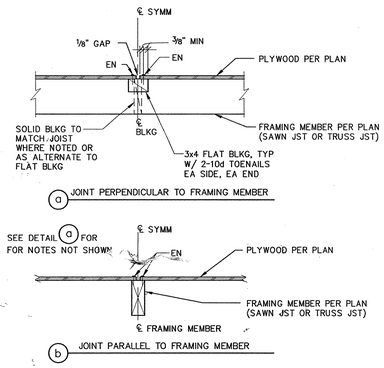

10 PLYWOOD NAILING

11 OPEN WEB JOIST BLOCKING & BRIDGING

1"=1'-0"

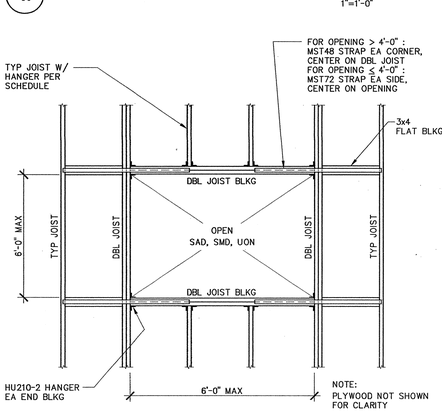

12 ROOF OPENING AT SAWN LUMBER FRAMING

½"=1'-0"

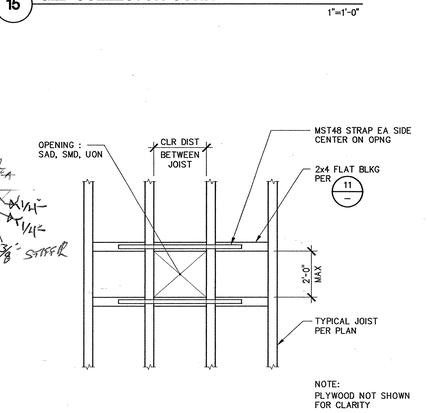

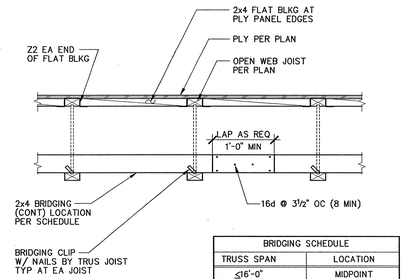

BRIDGING SCHEDULE	
TRUSS SPAN	LOCATION
≤16'-0"	MIDPOINT
16'-0" - 35'-0"	THIRD POINTS
35'-0" - 55'-0"	QUARTER POINTS

CONNECTION	NAILING[1]
1. Joist or rafters to sides of studs 8-inch joist or less For each additional 4 inches in depth of joist	3–16d 1–16d
2. Bridging to joists, toenail each end a. Blocking between joists or rafters- To joist or rafters-toenails each side, each end b. Blocking between studs, each end	2–8d 2–10d[12] 2–10d toenails or 2–16d
3. 1" x 6" subfloor or less to each joist, face nail	2–8d
4. Wider than 1" x 6" subfloor to each joist, face nail	3–8d
5. 2" subfloor to joist or girder, blind and face nail	2–16d
6. Sole plate to joist or blocking, typical ace nail Sole plate to joist or blocking, at braced wall pannels	16d at 16" oc 3–16d per 16"
7. Top plate to stud, end nail	2–16d
8. Stud to sole plate	4–8d, toenail or 2–16d, end nail
9. Double studs, face nail	16d at 24" oc
10. Doubled top plates, Typical face nail Double top plates, lap splice	16d at 16" oc[13] splice per detail 7 S8.01
11. Blocking between joists or rafters to top plate, toenail	3–8d
12. Rim joist to top plate, toenail	8d at 6" oc
13. Top plates, laps and intersections, face nail	2–16d
14. Continuous header, two pieces	16d at 16" oc along each side
15. Ceiling joists to plate, toenail	3–8d
16. Continuous header to stud, toenail	4–8d
17. Ceiling joist, laps over partitions, face nail	3–16d
18. Ceiling joists to parallel rafters, face nail	3–16d
19. Joist or rafters at all bearings–toenails, each side	2–10d
20. 1" brace to each stud and plate, face nail	2–8d
21. 1" x 8" sheathing or less to each bearing, face nail	2–8d
22. Wider than 1" x 8" sheathing to each bearing, face nail	3–8d
23. Built-up corner studs	2–16d at 24" oc
24. Built-up girder and beams[5]	20d at 32" oc at top and bottom and staggered 2–20d at ends and at each splice
25. 2" planks	2–16d at each bearing
26. Wood structural panels and particleboard Subfloor, roof and wall sheathing (to framing): 1/2" and less 19/32" – 3/4" 7/8" – 1" 1 1/8" – 1 1/4" Combination subfloor–underlayment (to framing): 3/4" and less 7/8" – 1" 1 1/8" – 1 1/4"	 6d[3] 8d[4] or 6d[5] 8d[4] 10d or 8d[5] 8d[5] 8d[5] 10d or 8d[5]
27. Panel siding (to framing):[2] 1/2" or less 5/8"	 6d[6] 8d[6]
28. Fiberboard Sheathing:[7] 1/2" 25/32"	 No. 11 ga[8] 6d[4] No. 16 ga[9] No. 11 ga[8] 8d No. 16 ga[9]
29. Interior paneling 1/4" 3/8"	 4d[10] 6d[11]

FOOTNOTES:

1 USE COMMON WIRE NAILS EXCEPT WHERE OTHERWISE STATED.

2 NAILS SPACED AT 6 INCHES ON CENTER AT EDGES. 12 INCHES AT INTERMEDIATE SUPPORTS EXCEPT 6 INCHES AT ALL SUPPORTS WHERE SPANS ARE 48 INCHES OR MORE. FOR NAILING OF WOOD STRUCTURAL PANEL AND PARTICLEBOARD DIAPHRAGMS AND SHEAR WALLS, REFER TO SECTIONS 2315A.3.3 AND 2315A.4. NAILS FOR WALL SHEATHING MAY BE COMMON, BOX OR CASING.

3 COMMON OR DEFORMED SHANK.

4 COMMON.

5 DEFORMED SHANK.

6 CORROSION-RESISTANT SIDING OR CASING NAILS CONFORMING TO THE REQUIREMENTS OF SECTION 2304A.3.

7 FASTENERS SPACED 3 INCHES ON CENTER AT EXTERIOR EDGES AND 6 INCHES ON CENTER AT INTERMEDIATE SUPPORTS.

8 CORROSION-RESISTANT ROOFING NAILS WITH 7/16" INCH-DIAMETER HEAD AND 1½"-INCH LENGTH FOR ½"-INCH SHEATHING AND 1¾"-INCH LENGTH FOR 25/32-INCH SHEATHING CONFORMING TO THE REQUIREMENTS OF SECTION 2304A.3

9 CORROSION-RESISTANT STAPLES WITH NOMINAL 7/16-INCH CROWN AND 1-⅛-INCH LENGTH FOR ½-INCH SHEATHING AND 1½-INCH LENGTH FOR 25/32-INCH SHEATHING CONFORMING TO THE REQUIREMENTS OF SECTION 2304A.3.

10 PANEL SUPPORTS AT 16 INCHES [20 INCHES IF STRENGTH AXIS IN THE LONG DIRECTION OF THE PANEL, UNLESS OTHERWISE MARKED]. CASING OR FINISH NAILS SPACED 6-INCHES ON PANEL EDGES, 12 INCHES AT INTERMEDIATE SUPPORTS.

11 PANEL SUPPORTS AT 24". CASING OR FINISH NAILS SPACED 6" ON PANEL EDGES, 12" AT INTERMEDIATE SUPPORTS.

12 WHEN POSSIBLE, NAILS DRIVEN PERPENDICULAR TO THE GRAIN SHALL BE USED INSTEAD OF TOENAILS.

13 WHERE BEVELED TOP PLATES OCCUR, REDUCE TYPICAL FACE NAIL SPACING TO 8" OC.

14 NAILS DRIVEN INTO PRESSURE TREATED WOOD SHALL BE HOT DIPPED GALVANIZED.

8 NAILING SCHEDULE
2001 CBC-TABLE NO. 23A-II-B-1

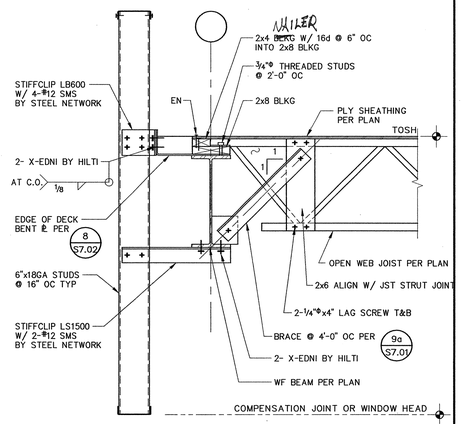

FOR INFO NOT SHOWN OR NOTED, SEE 8 S7.02

a ROOF PERPENDICULAR TO JOIST

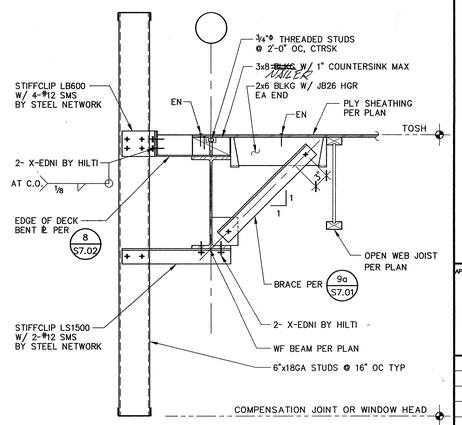

FOR INFO NOT SHOWN OR NOTED, SEE 8 S7.02

RFI-042 -110

b ROOF PARALLEL TO JOIST

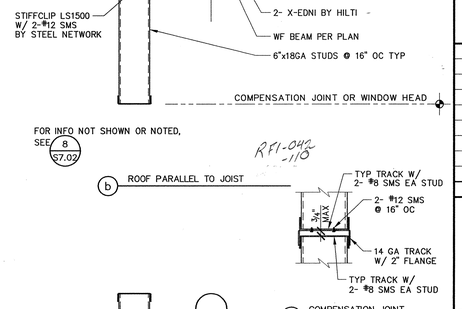

FOR INFO NOT SHOWN OR NOTED, SEE 7 S7.02

c SECOND FLOOR

FOR WALL FRAMING AT GROUND FLOOR SLAB ON GRADE BELOW WINDOWS SEE 20 S8.01

4 EXTERIOR CLADDING
CLASSROOM BLDG

1"=1'-0"

APPROVAL STAMP

IDENTIFICATION STAMP
DIVISION OF THE STATE ARCHITECT
APPL 02- 107417
AC ____ FLS ____ SS ____
DATE: 12/21/05

NO.	ISSUED FOR	DATE
1	DSA APPROVAL SET	12/08/05

CERTIFIED BY

REGISTERED PROFESSIONAL ENGINEER JOSEPH R. SUTTON NO. 2185 Exp. 12-31-05 STRUCTURAL STATE OF CALIFORNIA

K M D
KAPLAN McLAUGHLIN DIAZ
ARCHITECTURE PLANNING
222 VALLEJO SAN FRANCISCO, CA 94111
(415) 398-5191 FAX (415) 394-7158

DASSE
DASSE DESIGN INC.
San Francisco Structural Engineering Inc.
Oakland San Jose
San Diego San Francisco, CA (415)
Orange County Tel: 415-543-4474
info@dasse.com
www.dasse.com

SOLANO COMMUNITY COLLEGE

SCCD
VALLEJO CENTER
Contract # A003.6123.01.V1

PROJECT NO.	DATE
419-201	12-08-05

WOOD & LT. GAUGE METAL DETAILS

AS BUILTS

S8.02

FILE#: E:\2004 Jobs\04B176\Struct\04B176S802.dwg07/12/05 at 09:52
XREF: \04B176S_TB.dwg
PLOT DATE:
COPYRIGHT © 2004 BY KMD (KAPLAN McLAUGHLIN DIAZ). ALL RIGHTS RESERVED.

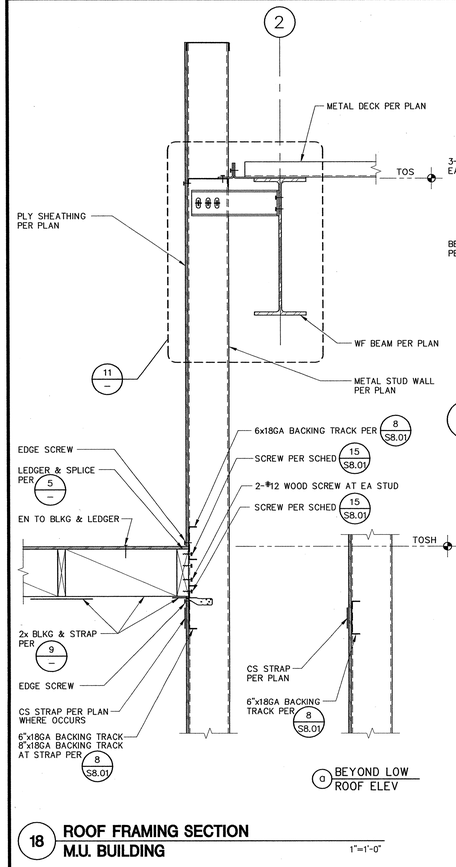

18 ROOF FRAMING SECTION
M.U. BUILDING — 1"=1'-0"

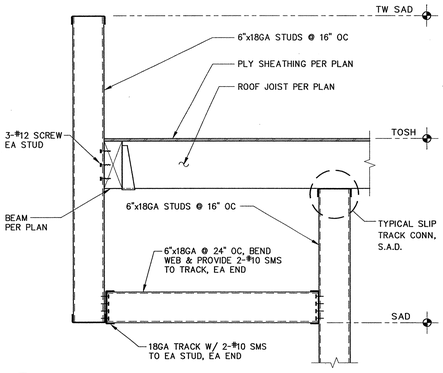

13 ROOF FRAMING AT SOFFIT
M.U. BUILDING — 1"=1'-0"

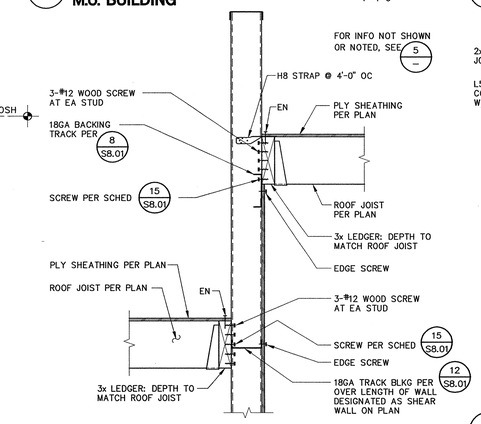

14 ROOF FRAMING SECTION
M.U. BUILDING — 1"=1'-0"

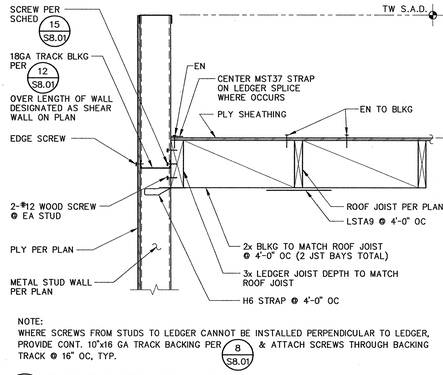

9 ROOF JOIST PARALLEL TO WALL
M.U. BUILDING — 1"=1'-0"

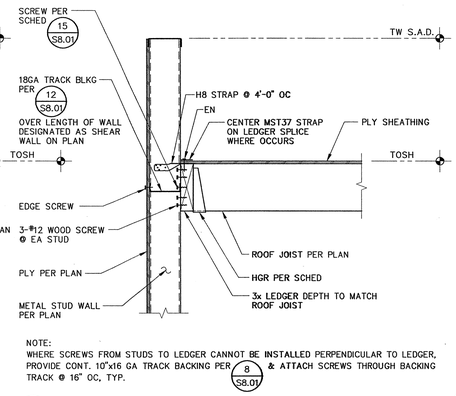

5 ROOF JOIST PERPENDICULAR TO WALL
M.U. BUILDING — 1"=1'-0"

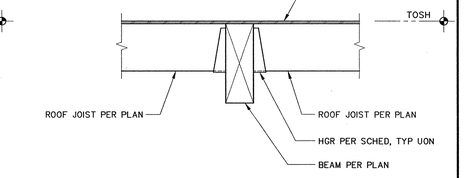

1 ROOF JOIST TO BEAM CONNECTION
1"=1'-0"

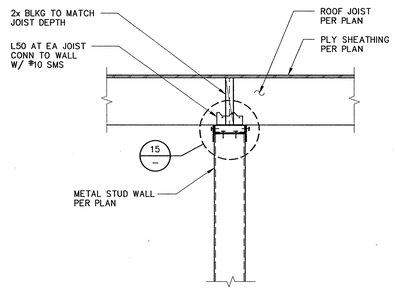

10 INTERIOIR METAL STUD BEARING WALL
M.U. BUILDING — 1"=1'-0"

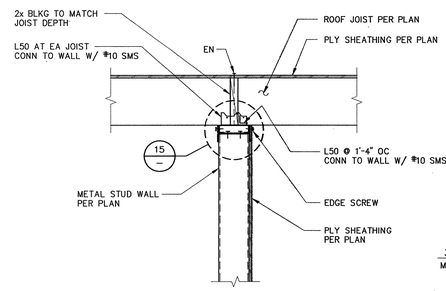

6 INTERIOIR METAL STUD SHEAR WALL
M.U. BUILDING — 1"=1'-0"

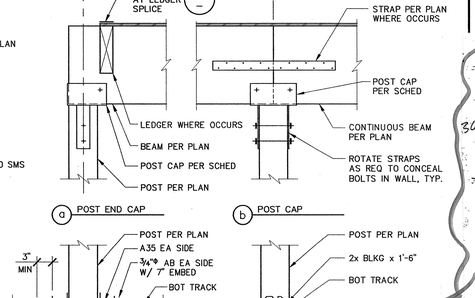

2 BEAM AND POST CONNECTION
1"=1'-0"

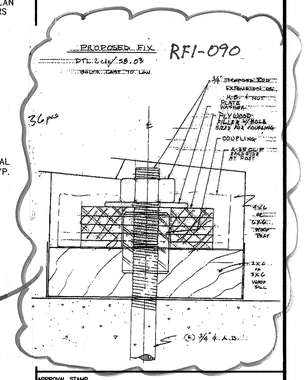

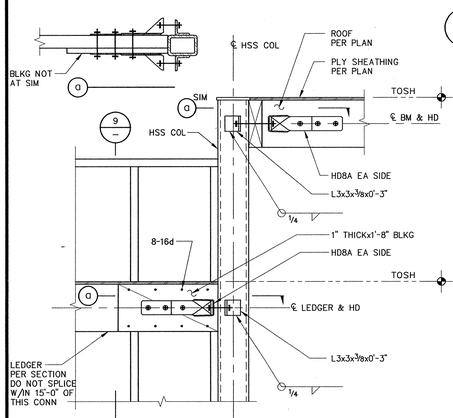

19 HSS COLUMN / COLLECTOR
M.U. BUILDING — 1"=1'-0"

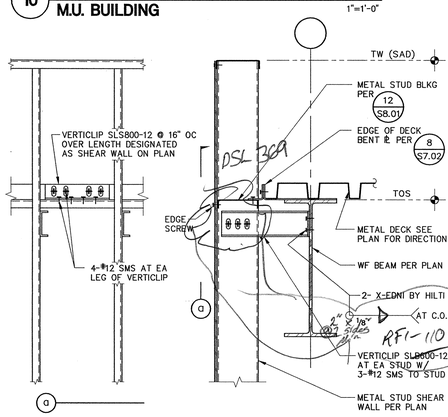

11 SHEAR WALL AT HIGH ROOF
M.U. BUILDING — 1"=1'-0"

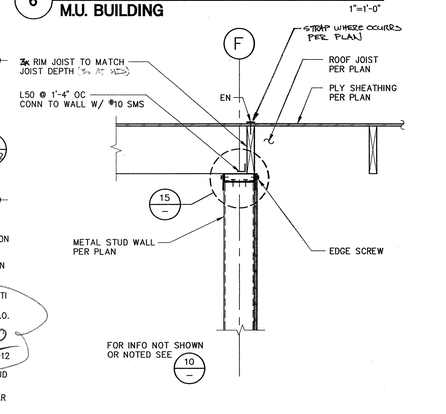

7 INTERIOR METAL STUD SHEAR WALL
M.U. BUILDING — 1"=1'-0"

3 HANGER / POST CAP SCHEDULE
1"=1'-0"

HANGER SCHEDULE		POST CAP SCHEDULE	
JOIST SIZE	SIMPSON HANGER	BEAM SIZE	SIMPSON POST CAP
2x4	U24	4x6	PC/EPC 46
2x6	U26	4x8	PC/EPC 46
2x8	U26	4x10	PC/EPC 46
2x10	U210	4x12	CC/ECC 46
4x10	HU410TF	6x6	PC/EPC 66
2-2x4	HU24-2	6x8	PC/EPC 66
2-2x6	HU26-2	6x10	CC/ECC 66
2-2x8	HU28-2	6x12	CC/ECC 66
2-2x10	HU210-2	6x14	CC/ECC 66
6x10	HUC610TF	6x16	CC/ECC 66
3x4	U34	3⅛x GLB	CC/ECC 3¼-4
3x6	U36	5⅛x GLB	CC/ECC 5¼-6
3x8	U38	6¾x GLB	CC/ECC 76
3x10	U310	8¾x GLB	
3x12	U310		
3⅛x GLB	LEG3/GLS3		
5⅛x GLB	LEG5/GLS5		
6¾x GLB	EG7/GLS7		
8¾x GLB	EG9/GLS9		
6x12	HUC612TF		

NOTES:
1. HANGER & POST CAP HARDWARE ARE TYPICAL U.O.N. IN DRAWINGS.
2. INSTALL PER MANUFACTURER'S INSTRUCTIONS. FILL ALL HOLES WITH FASTENERS SPECIFIED.
3. USE SKEWED AND SLOPED HANGERS AS REQUIRED.

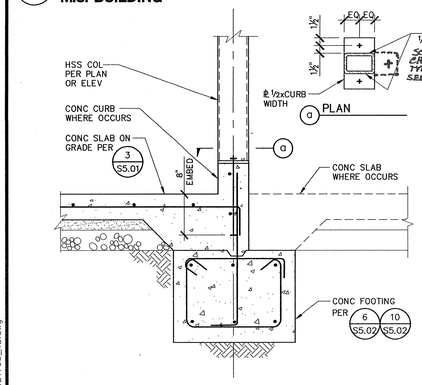

20 HSS COLUMN IN STUD WALL
M.U. BUILDING — 1"=1'-0"

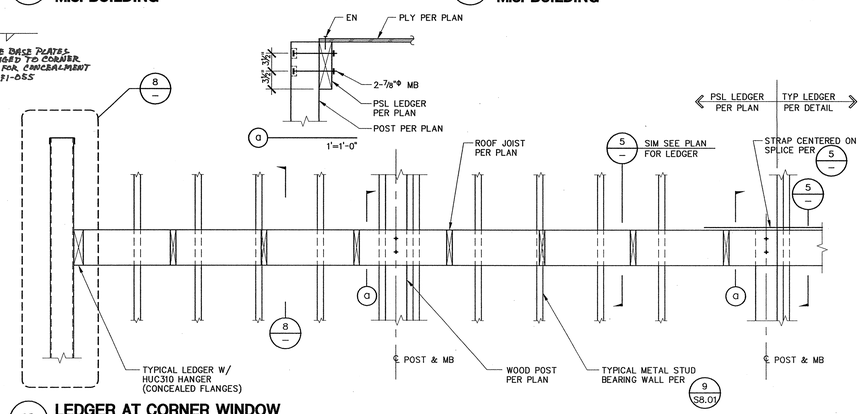

15 TOP TRACK AT BEARING WALL
M.U. BUILDING — 3"=1'-0"

16 LEDGER AT CORNER WINDOW
M.U. BUILDING — 3/4"=1'-0"

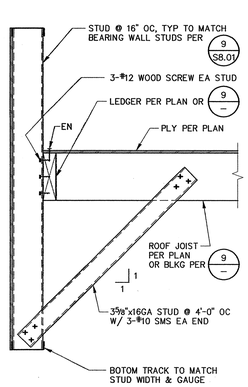

8 WALL OVER CORNER WINDOW
M.U. BUILDING — 1"=1'-0"

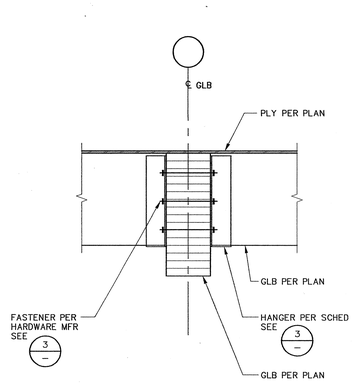

4 GLB TO GLB CONN
CR. BUILDING — 1"=1'-0"

APPROVAL STAMP
IDENTIFICATION STAMP
DIVISION OF THE STATE ARCHITECT
APPL 02- 107417
AC ____ FLS ____ SS MC
DATE: 12/21/05

NO.	ISSUED FOR	DATE
1	DSA APPROVAL SET	12/08/05

CERTIFIED BY

JOSEPH R. SUTTON — REGISTERED PROFESSIONAL ENGINEER — No. 2455 — Exp. 12-31-05 — STRUCTURAL — STATE OF CALIFORNIA

K M D
KAPLAN McLAUGHLIN DIAZ
ARCHITECTURE PLANNING
222 VALLEJO SAN FRANCISCO, CA 94111
(415) 398-5191 FAX (415) 394-7158

DASSE — Design Services for Construction Excellence

SOLANO COMMUNITY COLLEGE

SCCD
VALLEJO CENTER
Contract # A003.6123.01.V1

PROJECT NO.	DATE
419-201	12-08-05

WOOD LT. GAUGE METAL DETAILS

AS BUILTS

S8.03

FILE: E:\2004 Jobs\04B176\Struct\04B176S803.dwg07/14/05 at 09:13
XREF: \04B176S_TB.dwg
PLOT DATE:
COPYRIGHT © 2004 BY KMD (KAPLAN McLAUGHLIN DIAZ). ALL RIGHTS RESERVED.

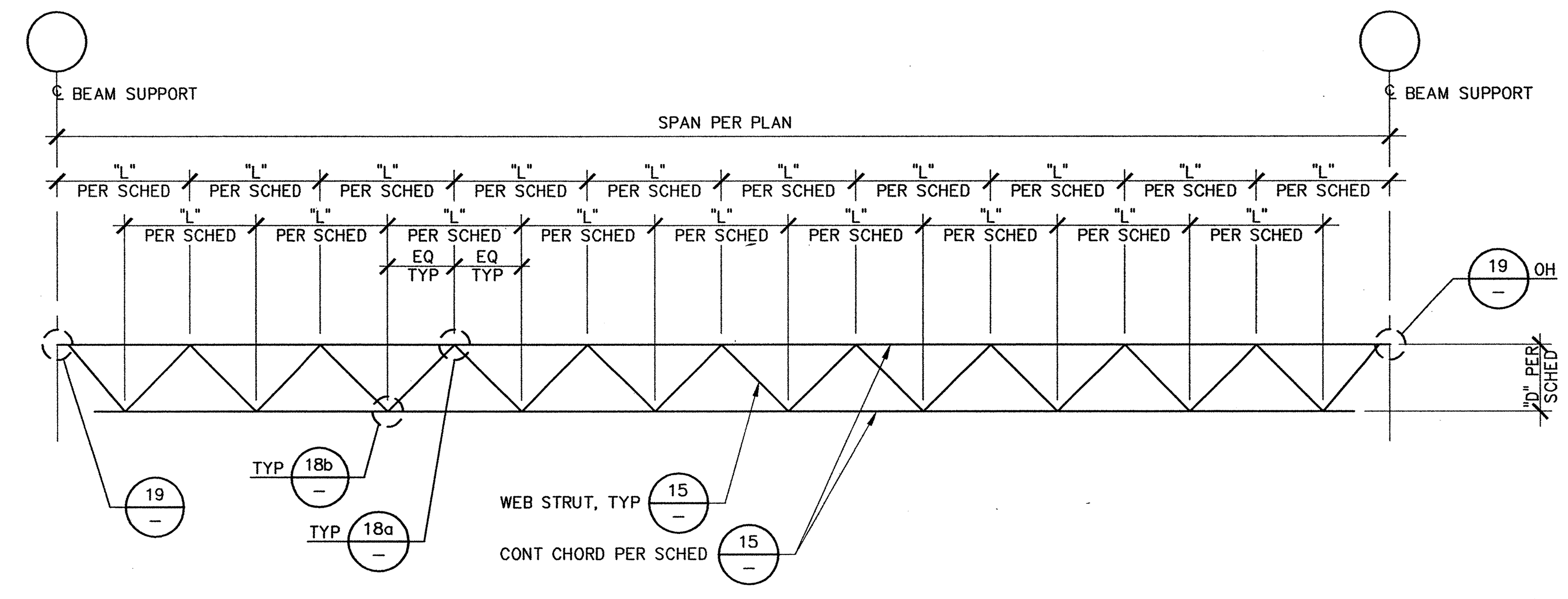

17 OPEN WEB TRUSS PROFILE (TJL)
3/8"=1'-0"

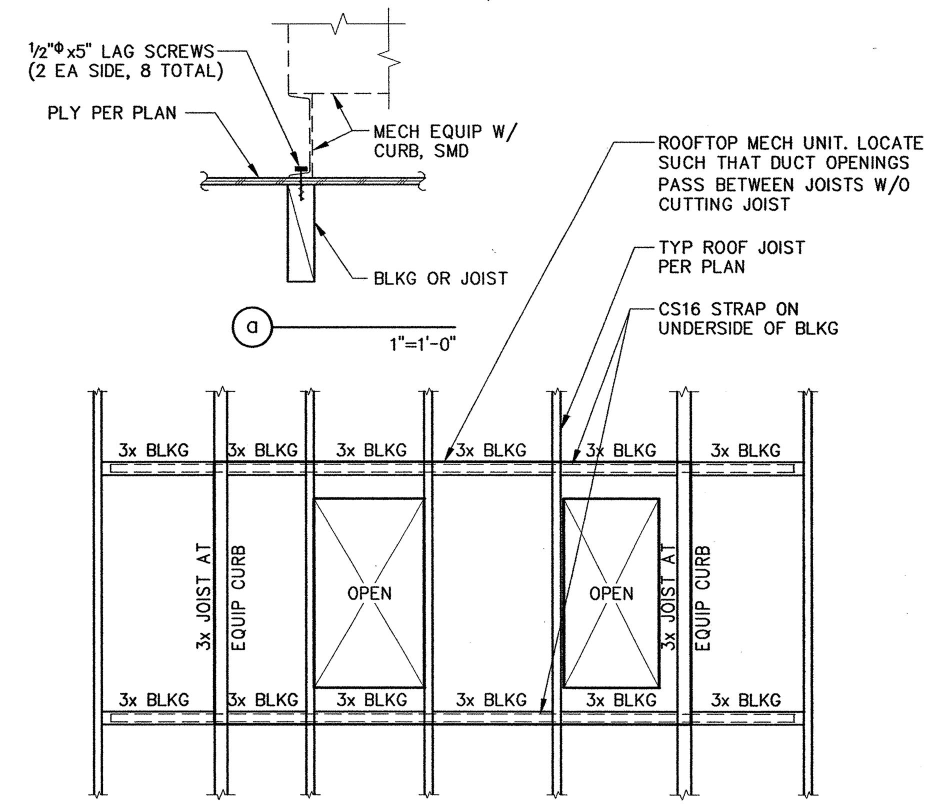

9 ROOF TOP MECHANICAL UNIT
M.U. BUILDING
1/2"=1'-0"

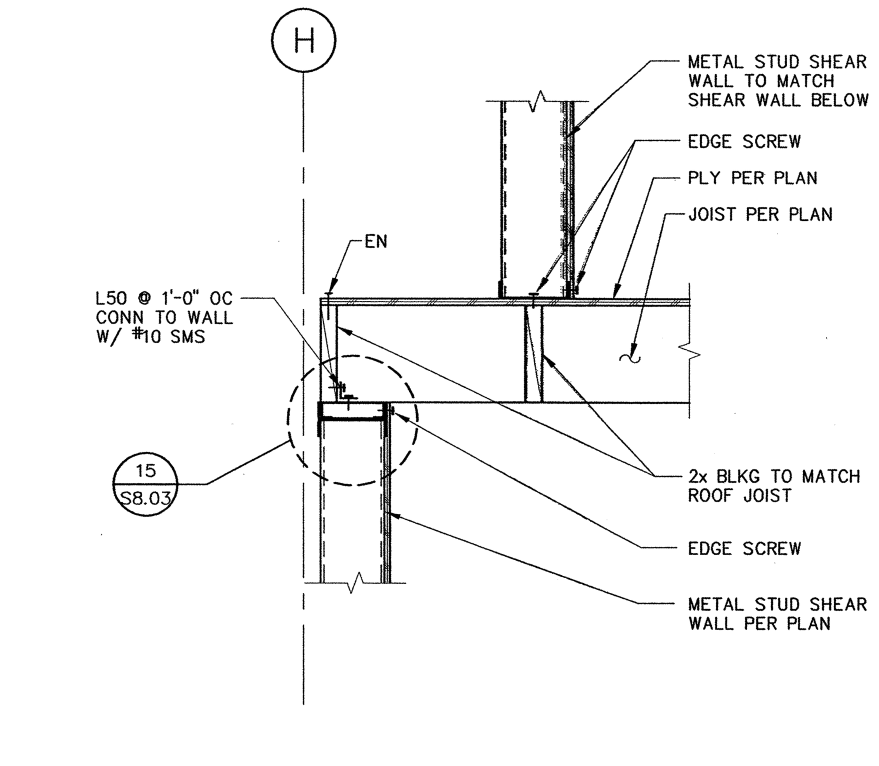

5 WALL SECTION AT OFFSET
M.U. BUILDING
1"=1'-0"

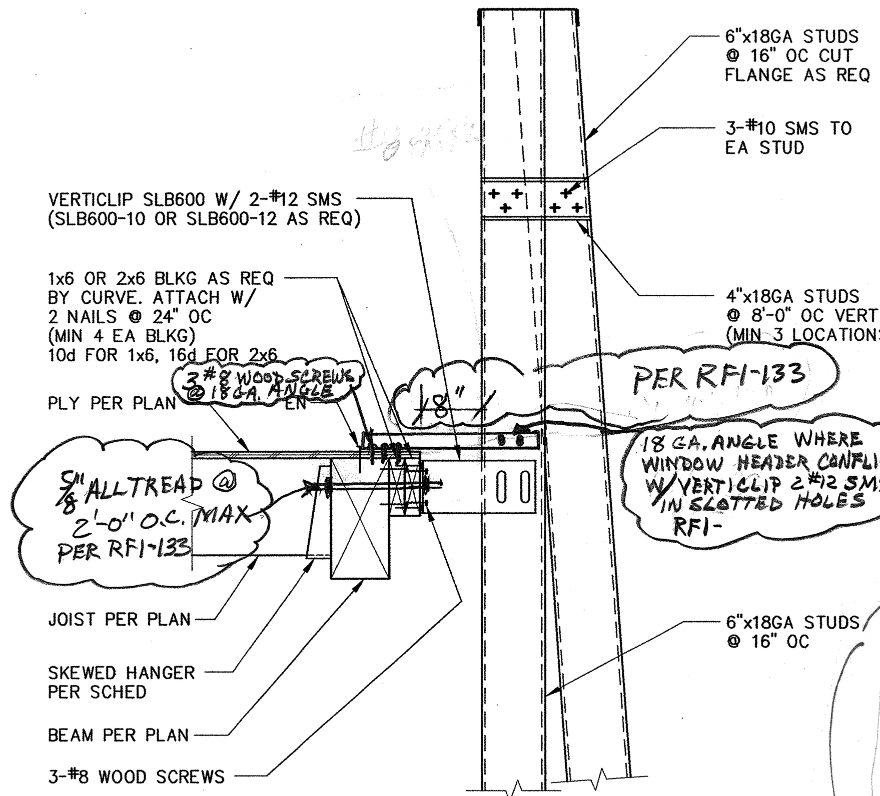

1 SKEWED WALL AT ROOF
M.U. BUILDING
1'=1'-0"

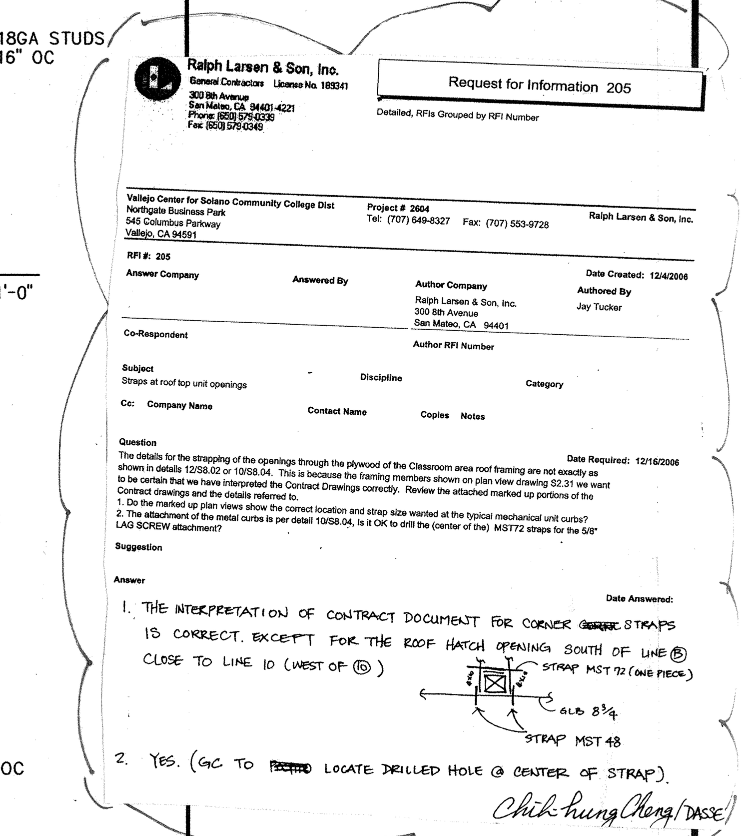
Ralph Larsen & Son, Inc.
General Contractors License No. 189341
300 8th Avenue
San Mateo, CA 94401-4221
Phone: (650) 579-0339
Fax: (650) 579-0349

Request for Information 205

Detailed, RFIs Grouped by RFI Number

Vallejo Center for Solano Community College Dist
Northgate Business Park
545 Columbus Parkway
Vallejo, CA 94591

Project # 2604
Tel: (707) 649-8327 Fax: (707) 553-9728

Ralph Larsen & Son, Inc.

RFI #: 205

Answer Company — Answered By — Author Company: Ralph Larsen & Son, Inc., 300 8th Avenue, San Mateo, CA 94401 — Date Created: 12/4/2006 — Authored By: Jay Tucker

Co-Respondent — Author RFI Number

Subject: Straps at roof top unit openings — Discipline — Category

Cc: Company Name — Contact Name — Copies — Notes

Question — Date Required: 12/16/2006
The details for the strapping of the openings through the plywood of the Classroom area roof framing are not exactly as shown in details 12/S8.02 or 10/S8.04. This is because the framing members shown on plan view drawing S2.31 we want to be certain that we have interpreted the Contract Drawings correctly. Review the attached marked up portions of the Contract drawings and the details referred to.
1. Do the marked up plan views show the correct location and strap size wanted at the typical mechanical unit curbs?
2. The attachment of the metal curbs is per detail 10/S8.04, is it OK to drill the (center of the) MST72 straps for the 5/8" LAG SCREW attachment?

Suggestion

Answer — Date Answered:
1. THE INTERPRETATION OF CONTRACT DOCUMENT FOR CORNER ~~[struck]~~ STRAPS IS CORRECT. EXCEPT FOR THE ROOF HATCH OPENING SOUTH OF LINE (B) CLOSE TO LINE 10 (WEST OF (10)) — STRAP MST 72 (ONE PIECE) — GLB 8 3/4 — STRAP MST 48
2. YES. (GC TO ~~[struck]~~ LOCATE DRILLED HOLE @ CENTER OF STRAP).
Chih-hung Cheng / DASSE

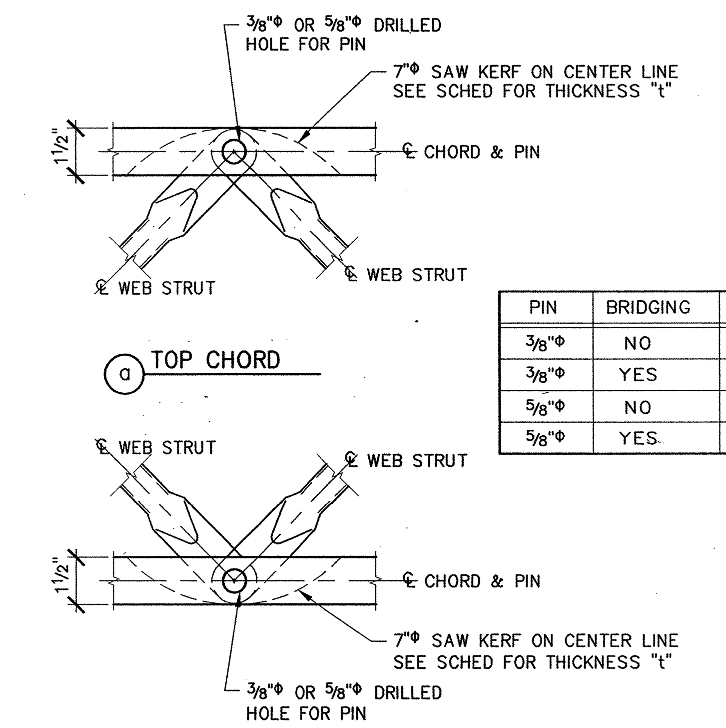

PIN	BRIDGING	"t"
3/8"Φ	NO	7/32"
3/8"Φ	YES	11/32"
5/8"Φ	NO	3/8"
5/8"Φ	YES	1/2"

18 WEB STRUT TO CHORD CONNECTION
OPEN WEB JOIST
3"=1'-0"

OPEN WEB JOIST SCHEDULE

MARK	DIMENSIONS "D"	DIMENSIONS "L"(2)	CHORD MEMBER SIZE(7)	CHORD MEMBER GRADE(5)	WEB STRUT TUBE(3)	PIN(4)
TJL14	14"	24" MAX	2x4	MSR 2100F/1.8E	1"Φx19 GA	3/8"Φ
TJL16	16"	24" MAX	2x4	MSR 2400F/2.0E	1"Φx16 GA	5/8"Φ
TJL18	18"	24" MAX	2x4	MSR 2700F/2.2E	1"Φx16 GA	5/8"Φ

NOTES:

1. PREFABRICATED WOOD OPEN WEB JOISTS SHALL BE MANUFACTURED BY TRUS JOIST IN ACCORDANCE WITH ICC PFC-4354. FOR SUBSTITUTION OF AN EQUAL PRODUCT BY AN ALTERNATE MANUFACTURER, THE CONTRACTOR MUST SUBMIT COMPLETE DESIGN CALCULATIONS AND SHOP DRAWINGS STAMPED AND SIGNED BY A LICENSED STRUCTURAL ENGINEER IN THE STATE OF CALIFORNIA. THE CONTRACTOR MUST JUSTIFY THAT THE SUBSTITUTED PRODUCT IS EQUAL TO OR BETTER THAN THE SPECIFIED DESIGN UNDER THE FOLLOWING DESIGN CRITERIA:
   ROOF DEAD LOAD = 26 PSF (TYP), 32 PSF (TJL16)
   ROOF LIVE LOAD = 20 PSF
   DEAD + LIVE LOAD DEFLECTION ≤ L/240
   LIVE LOAD DEFLECTION ≤ L/360
   THE PRODUCT SUBSTITUTION OF OPEN WEB JOIST IS SUBJECT TO THE REVIEW AND THE ACCEPTANCE OF THE ARCHITECT AND THE REVIEW AND APPROVAL OF DSA. THE CONTRACTOR'S SCHEDULE SHALL PROVIDE FOR THESE REVIEWS AT NO ADDITIONAL COST TO THE DISTRICT. CONTRACTOR SHALL PAY THE COSTS OF ADDITIONAL SERVICES REQUIRED BY THE ARCHITECT AND ENGINEER TO REVIEW AND PROCESS THE PROPOSED SUBSTITUTION.
2. QUANTITY AND SPACING OF WEB MEMBERS WILL VARY WITH SPAN. DIMENSION "L" SHALL BE CONSTANT FOR EACH INDIVIDUAL JOIST. FABRICATOR TO ALIGN ALL WEBS OF ADJACENT JOISTS.
3. MEMBERS USED FOR WEB STRUTS SHALL BE COLD FORMED STEEL TUBES CONFORMING TO ASTM A500, GRADE B.
4. PINS USED IN CONNECTIONS SHALL CONFORM TO THE SPECIFICATIONS OF ICC PFC-4354 AND THE PHYSICAL PROPERTIES OF SAE GRADE 8.
5. FABRICATOR SHALL CERTIFY THAT THE MATERIAL USED FOR CHORD MEMBERS HAS ALLOWABLE STRESSES THAT MEET OR EXCEED THOSE SPECIFIED IN TABLE 4, ICC PFC-4354.
6. PROVIDE BRIDGING AT THE BOTTOM CHORD OR ALL OPEN WEB JOISTS PER DETAIL 11/S8.02.
7. SIZE INDICATED IS NOMINAL.

15 OPEN WEB JOIST SCHEDULE & NOTES
NTS

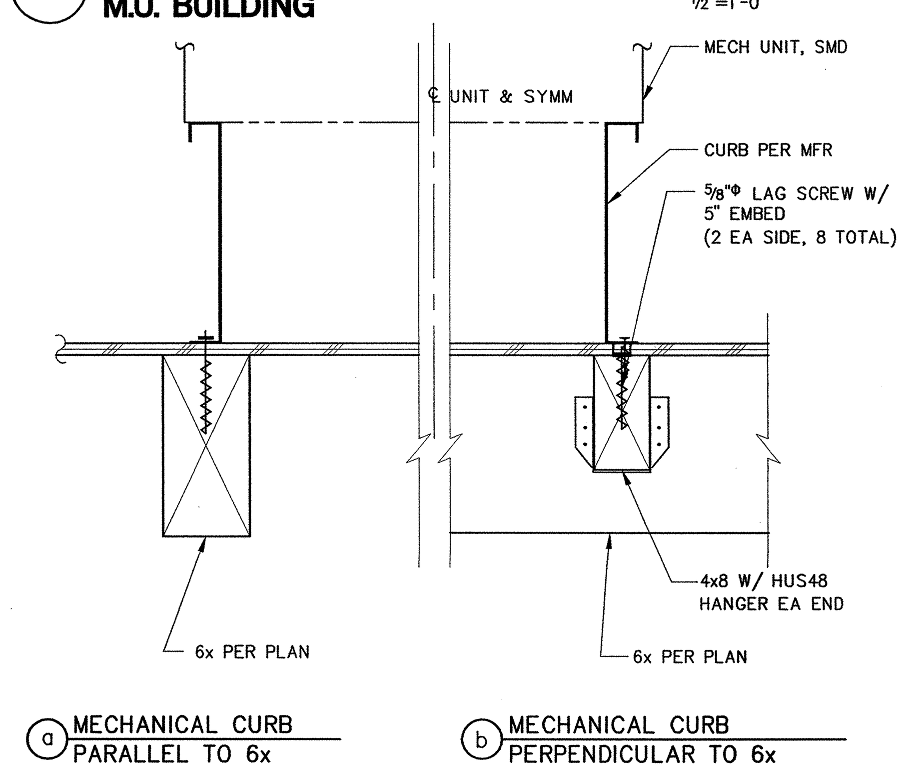

10 MECHANICAL UNIT SUPPORT
C.R. BUILDING
1 1/2"=1'-0"

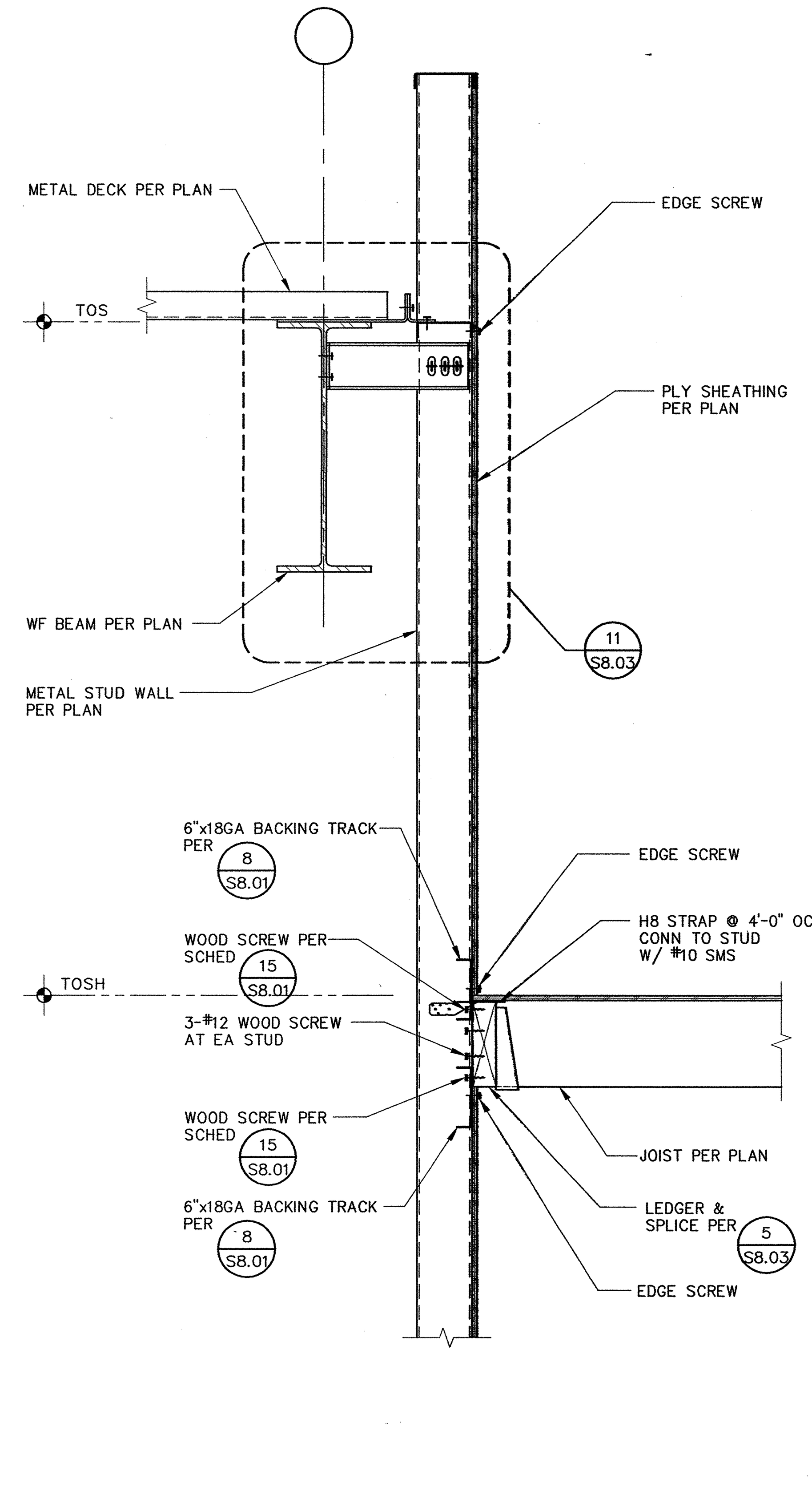

7 ROOF FRAMING SECTION
M.U. BUILDING
1"=1'-0"

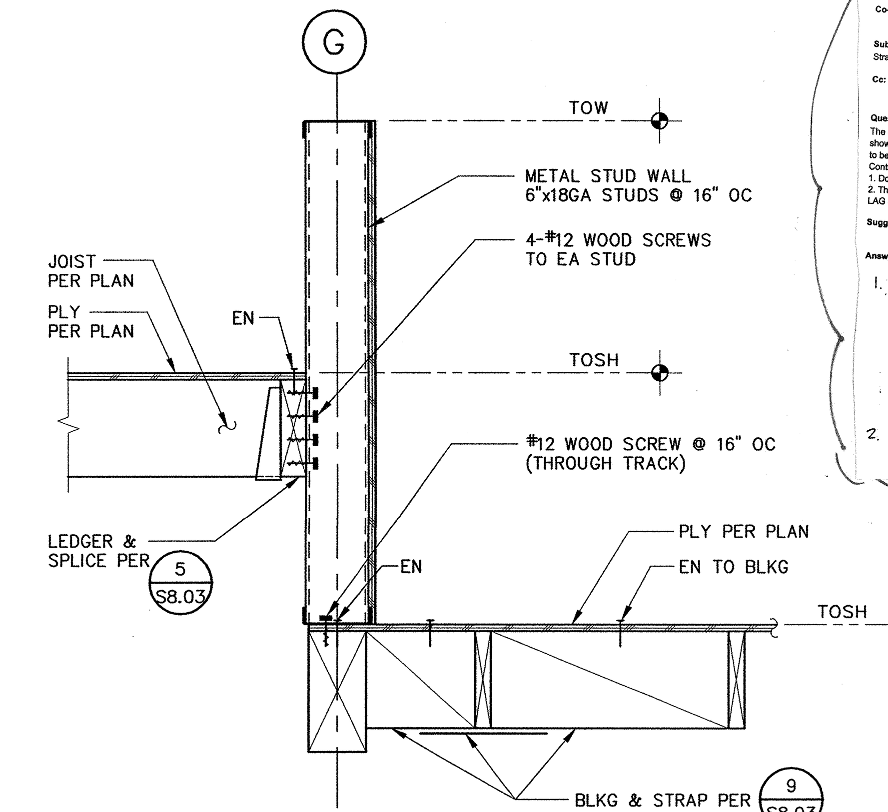

2 ROOF SECTION AT TRANSITION
M.U. BUILDING
1'=1'-0"

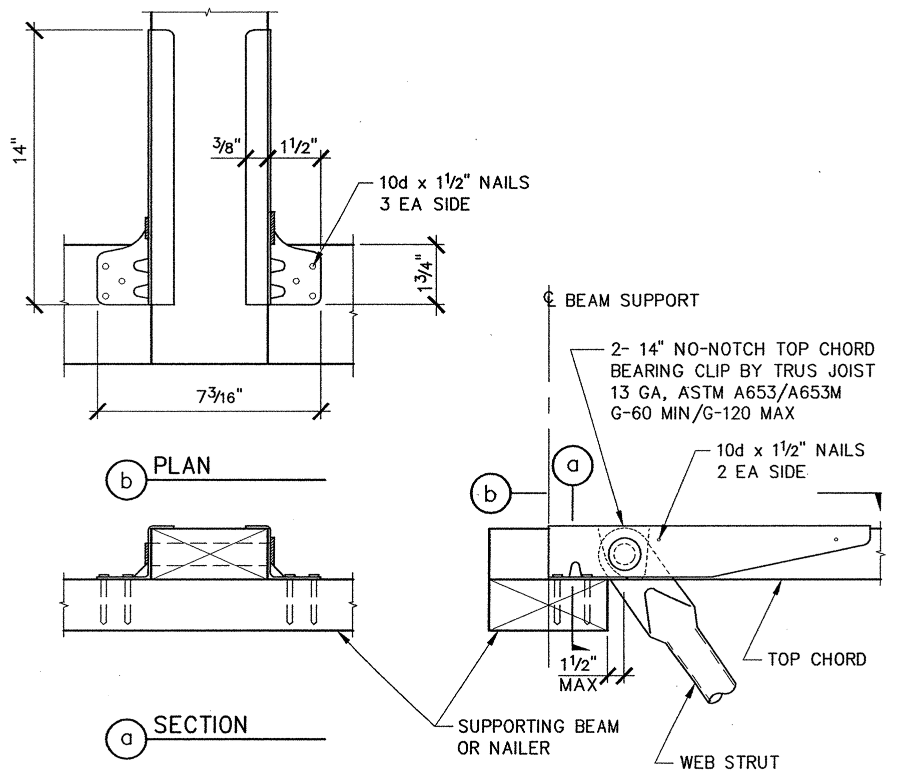

19 TOP CHORD BEARING CONNECTION
OPEN WEB JOIST
3"=1'-0"

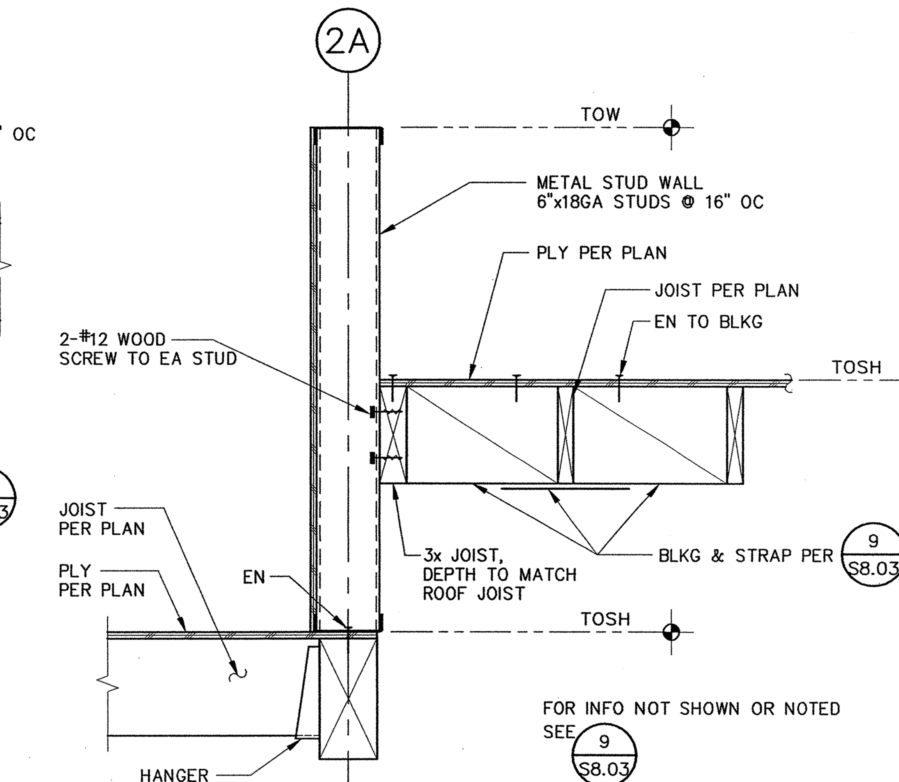

3 ROOF SECTION AT TRANSITION
M.U. BUILDING
1'=1'-0"

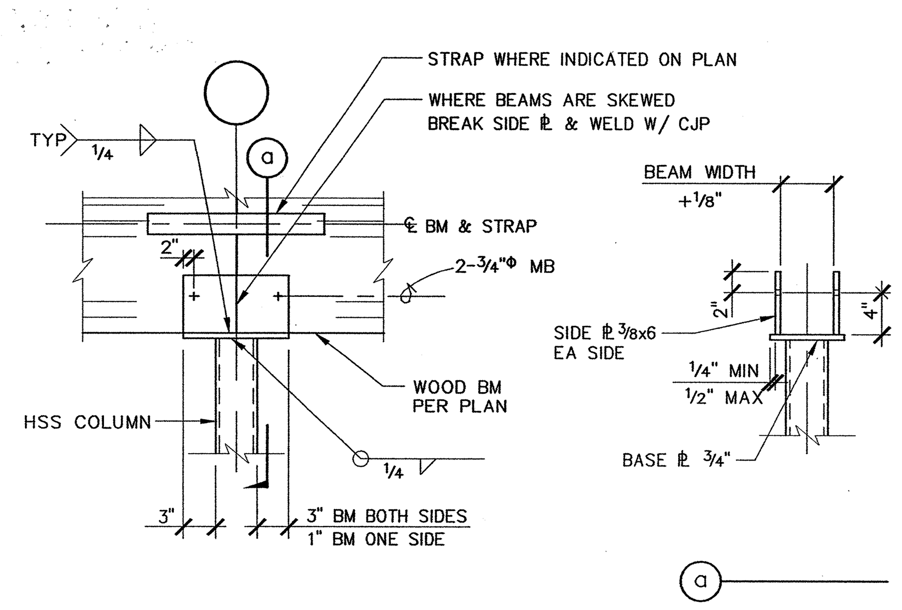

16 BEAM TO HSS COLUMN CONNECTION
1"=1'-0"

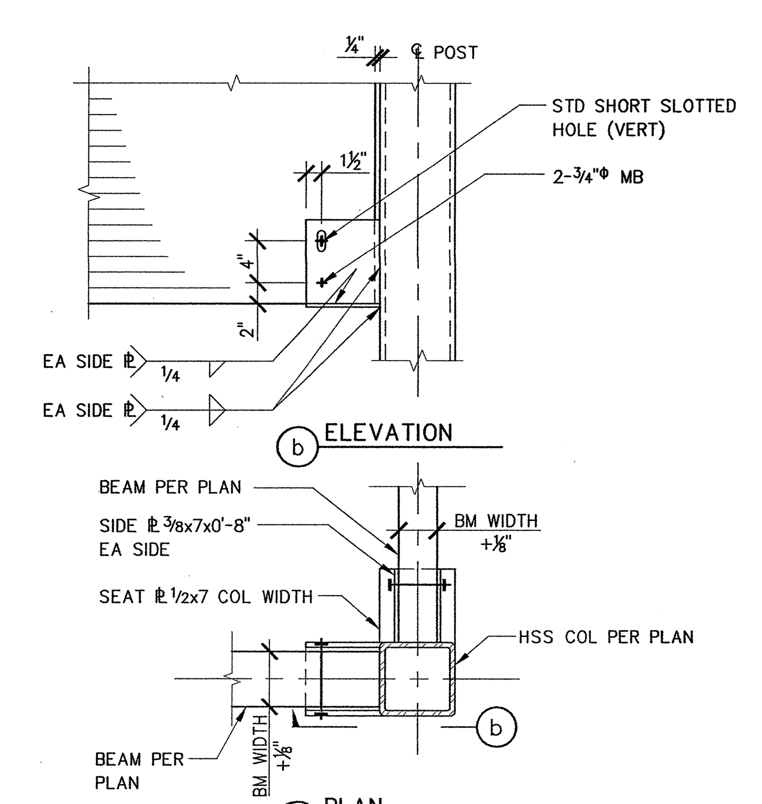

12 BEAM TO HSS COL CONN
M.U. BUILDING
1'=1'-0"

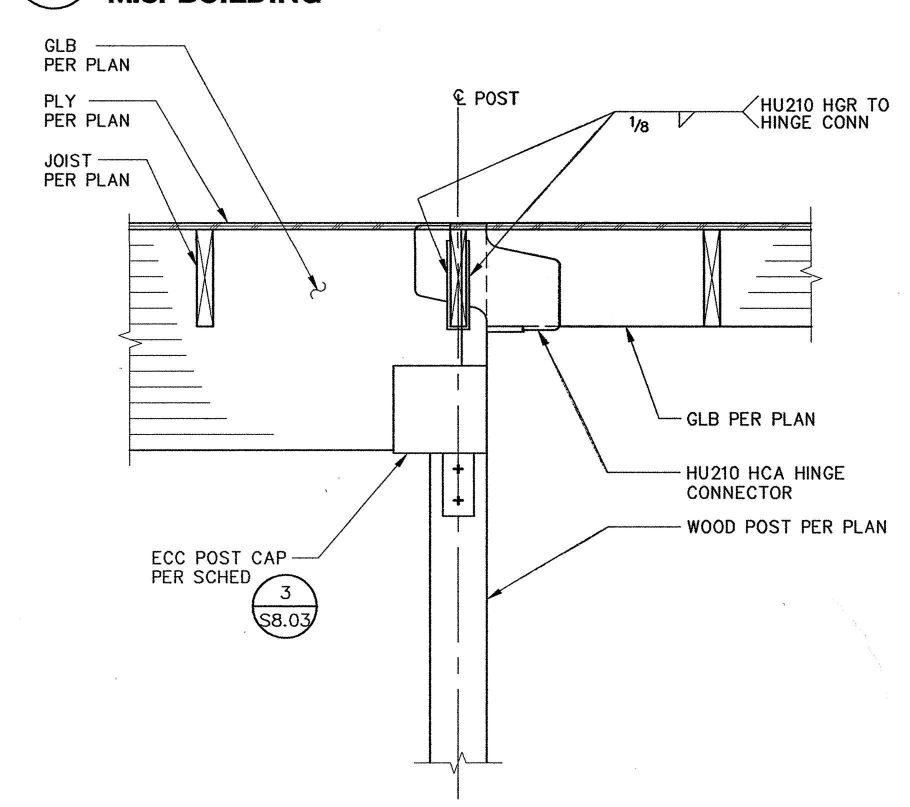

8 HINGE CONNECTOR
M.U. BUILDING
1'=1'-0"

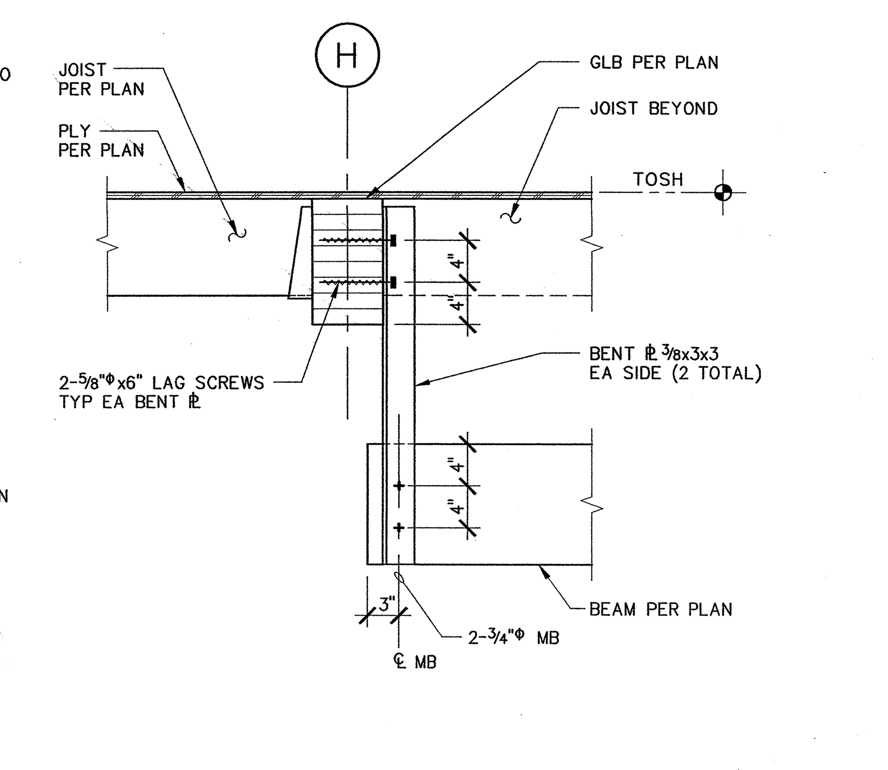

4 HANGING BEAM SUPPORT
M.U. BUILDING
1'=1'-0"

APPROVAL STAMP
IDENTIFICATION STAMP
DIVISION OF THE STATE ARCHITECT
APPL 02- 107417
AC ____ FLS ____ SS [signature]
DATE: 12/21/05

NO.	ISSUED FOR	DATE
1	DSA APPROVAL SET	12/08/05

CERTIFIED BY
REGISTERED PROFESSIONAL ENGINEER JOSEPH R. SUTTON NO. 2185 Exp. 12-31-05 STRUCTURAL STATE OF CALIFORNIA

K M D
KAPLAN McLAUGHLIN DIAZ
ARCHITECTURE PLANNING
222 VALLEJO
SAN FRANCISCO, CA 94111
(415) 398-5191
FAX (415) 394-7158

DASSE

SOLANO COMMUNITY COLLEGE

SCCD
VALLEJO CENTER
Contract # A003.6123.01.V1

PROJECT NO. 419-201
DATE 12-08-05

DETAILS
AS BUILTS

S8.04

FILE: E:\2004 Jobs\04B176\Struct\04B176S804.dwg07/13/05 at 14:12
XREF: .\04B176S_TB.dwg

PLOT DATE:

COPYRIGHT © 2004 BY KMD (KAPLAN McLAUGHLIN DIAZ). ALL RIGHTS RESERVED.

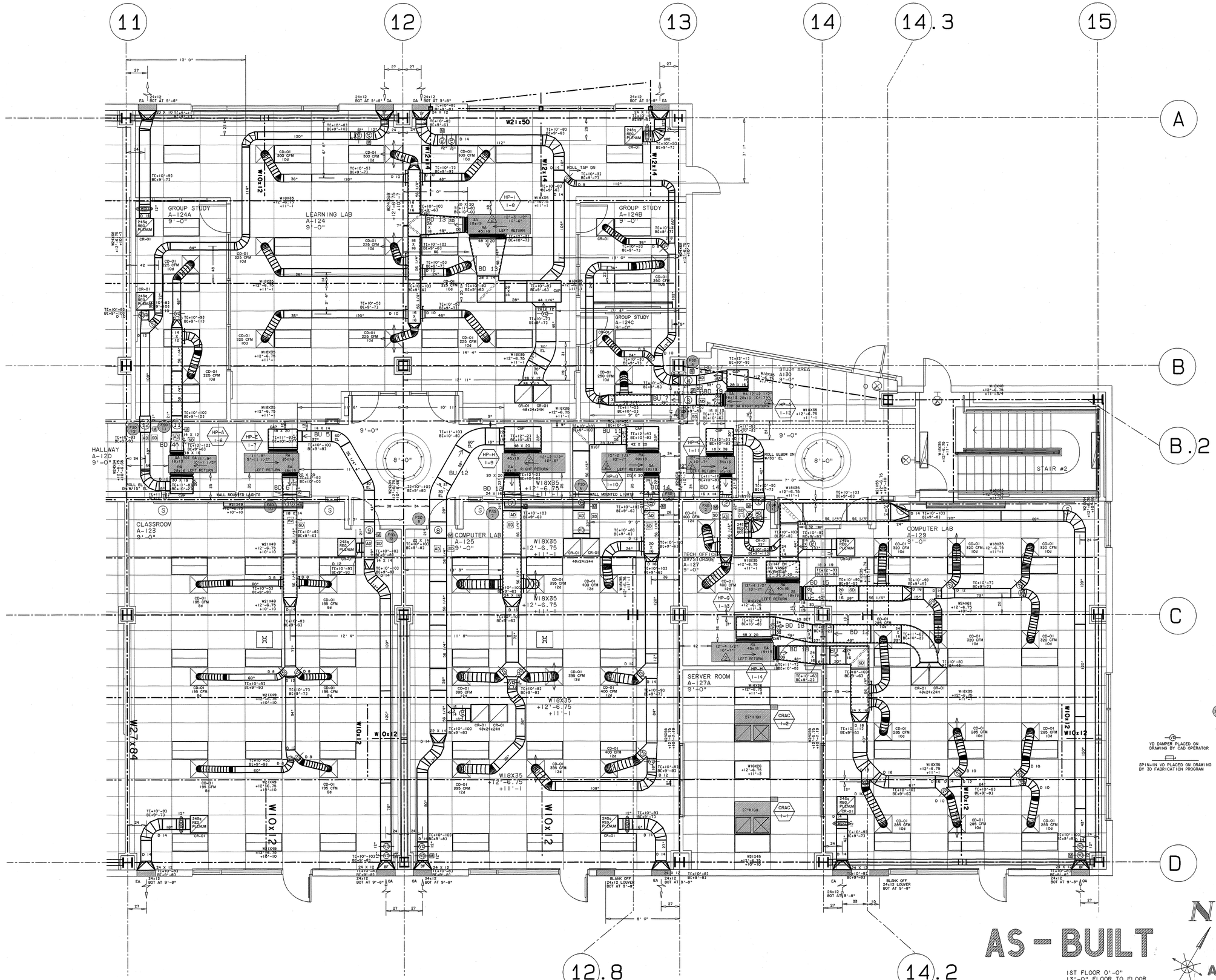

COORDINATION

COORDINATION	SIGNATURE	DATE
SHEET METAL		
HVAC DUCTWORK		
HVAC PIPING		
PLUMBING		
FIRE PROTECTION		
ELECTRICAL		
DRY WALL		

AIRE SHEET METAL, INC.
MECHANICAL CONTRACTORS
P.O. BOX 5629 × 1973 E. BAYSHORE ROAD
REDWOOD CITY, CALIFORNIA 94063
STATE CONTRACTOR'S LICENSE NO. 271264
PHONE (650) 364-8081

NO.	DATE	REVISION
1	9/29/06	ENGINEERING REVIEW, UNIT/DUCT ELEV'S ADJ AS REQ
2	10/5/06	COMBO LINE COORD
3	7/16/07	AS BUILT

FIRST FLOOR HVAC PLAN CLASSROOM BUILDING

VALLEJO EDUCATION CENTER
SOLANO COMMUNITY COLLEGE DISTRICT
545 COLUMBUS PARKWAY
VALLEJO, CALIFORNIA 94591

NOTES:

- FD....FIRE DAMPER
- FSD...FIRE/SMOKE DAMPER
- SD....SMOKE DETECTOR
- M.....MOTOR LOCATION
- BDD...BACKDRAFT DAMPER
- OED...OPEN ENDED DUCT
- SS....STAINLESS STEEL
- ROVD..REMOTE VOLUME DAMPER
- VD....VOLUME DAMPER
- P.....COIL CONNECTION SIDE
- UTR...UP THRU ROOF
- SRE...SHORT RADIUS ELBOW

VD DAMPER PLACED ON DRAWING BY CAD OPERATOR

SPIN-IN VD PLACED ON DRAWING BY 3D FABRICATION PROGRAM

COORDINATION NOTE

×ELEVATIONS INDICATED ON THIS DRAWING ARE TO THE DUCT BODY. ALLOW 2"CLEARANCE FOR TRANSVERSE CONNECTIONS, REIN. AND EXTERIOR INSULATION WHEN COORDINATING ELEVATIONS.

ALL ELEVATIONS ON THIS DRAWING ARE GIVEN FROM FINISHED FLOOR ELEVATION THIS FLOOR = 0'-0"

THE DESIGN OF THE SYSTEM CONTAINED ON THIS SHEET IS EXCLUSIVE PROPERTY OF AIRE SHEET METAL, INC. THE DRAWING OR BLUEPRINTS CONTAINING THIS DESIGN ARE AND SHALL REMAIN THE PROPERTY OF AIRE SHEET METAL, INC. THE DELIVERY OF THE ORIGINAL OR COPIES THEREOF DOES NOT CONSTITUTE A PUBLICATION THEREOF. THESE DRAWINGS OR BLUEPRINTS ARE EXHIBITED TO YOU SOLELY FOR THE PURPOSE OF TRANSACTING BUSINESS WITH US. ANY USE OF THIS AIR CONDITIONING SYSTEM INCORPORATING THE WITHIN DESIGN, ANY COMMUNICATION OF THIS DESIGN, WITHOUT THE CONSENT OF AIRE SHEET METAL, INC. CONSTITUTES A VIOLATION OF THE LAWS OF THIS STATE.

AS-BUILT

1ST FLOOR 0'-0"
13'-0" FLOOR TO FLOOR
5 1/4" SLAB
USL 12'-6 3/4"
ALL RA REGISTER PLENUMS HAVE 1" LINING PER M6.01/3

AS BUILTS

STEPHEN RAMM
752990

DATE	JULY 28, 2006
SCALE	1/4" = 1'-0"
DRAWN BY	LAMMSGATE
REF DWG.	M2.11
JOB NO.	3141
DRAWING NO.	V2.11A
REVISION NO.	AB

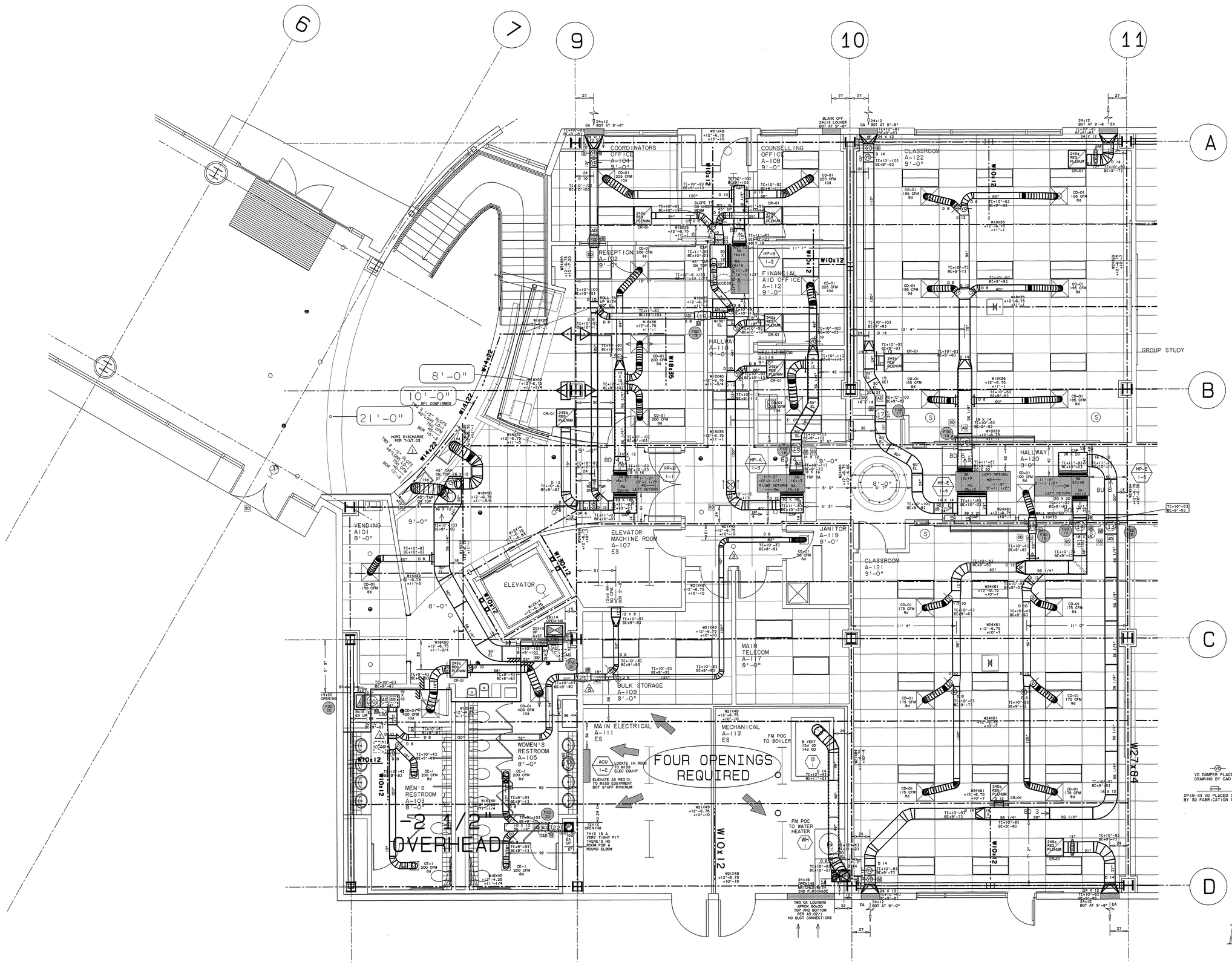

COORDINATION

COORDINATION	SIGNATURE	DATE
GENERAL CONTR.		
ELECTRICAL		
HVAC PIPING		
PLUMBING		
FIRE PROTECTION		
STRUCTURAL		
DRY WALL		

AIRE SHEET METAL, INC.
MECHANICAL CONTRACTORS
P.O. BOX 5629 × 1973 E. BAYSHORE ROAD
REDWOOD CITY, CALIFORNIA 94063
STATE CONTRACTOR'S LICENSE NO. 271264
PHONE (650) 364-8081

NO.	DATE	REVISION
1	9/29/06	ENGINEERING REVIEW, UNIT/DUCT ELEV'S ADJ AS NEC
2	7/16/07	AS BUILT

FIRST FLOOR HVAC PLAN
CLASSROOM BUILDING

VALLEJO EDUCATION CENTER
SOLANO COMMUNITY COLLEGE DISTRICT
545 COLUMBUS PARKWAY
VALLEJO, CALIFORNIA 94591

NOTES:

FD....FIRE DAMPER
FSD...FIRE/SMOKE DAMPER
SD....SMOKE DETECTOR
M.....MOTOR LOCATION
BDD...BACKDRAFT DAMPER
OED...OPEN ENDED DUCT
SS....STAINLESS STEEL
ROVD...REMOTE VOLUME DAMPER
VD.....VOLUME DAMPER
P.....COIL CONNECTION SIDE
UTR....UP THRU ROOF
SRE....SHORT RADIUS ELBOW
CAD....CEILING ACCESS DOOR

VD DAMPER PLACED ON DRAWING BY CAD OPERATOR

SPIN-IN VD PLACED ON DRAWING BY XD FABRICATION PROGRAM

COORDINATION NOTE

*ELEVATIONS INDICATED ON THIS DRAWING ARE TO THE DUCT BODY. ALLOW 2"CLEARANCE FOR TRANSVERSE CONNECTIONS, REIN. AND EXTERIOR INSULATION WHEN COORDINATING ELEVATIONS.

ALL ELEVATIONS ON THIS DRAWING ARE GIVEN FROM FINISHED FLOOR ELEVATION THUS 0'-0"

THE DESIGN OF THE SYSTEM CONTAINED ON THIS SHEET IS EXCLUSIVE PROPERTY OF AIRE SHEET METAL, INC. THE DRAWING OR BLUEPRINTS CONTAINING THIS DESIGN ARE AND SHALL REMAIN THE PROPERTY OF AIRE SHEET METAL, INC. THE DELIVERY OF THE ORIGINAL OR COPIES THEREOF DOES NOT CONSTITUTE A PUBLICATION THEREOF. THESE DRAWINGS OR BLUEPRINTS ARE EXHIBITED TO YOU SOLELY FOR THE PURPOSE OF TRANSACTING BUSINESS BY AIRE SHEET METAL, INC. THE DESIGN OF ANY SYSTEM INCORPORATING THE WITHIN DESIGN, ANY COMMUNICATION OF THIS DESIGN, WITHOUT THE CONSENT OF AIRE SHEET METAL, INC. CONSTITUTES A VIOLATION OF THE LAWS OF THIS STATE.

DATE	JULY 28, 2006
SCALE	1/4" = 1'-0"
DRAWN BY	LAMMSGATE
REF DWG.	M2.11
JOB NO.	3141
DRAWING NO.	V2.11B
REVISION NO.	AB

AS - BUILT

1ST FLOOR 0'-0"
13'-0" FLOOR TO FLOOR
5 1/4" SLAB
USL 12'-6 3/4"

ALL RA REGISTER PLENUMS HAVE 1" LINING PER MS.01/3

AS BUILTS

STEPHEN RAMM
752990

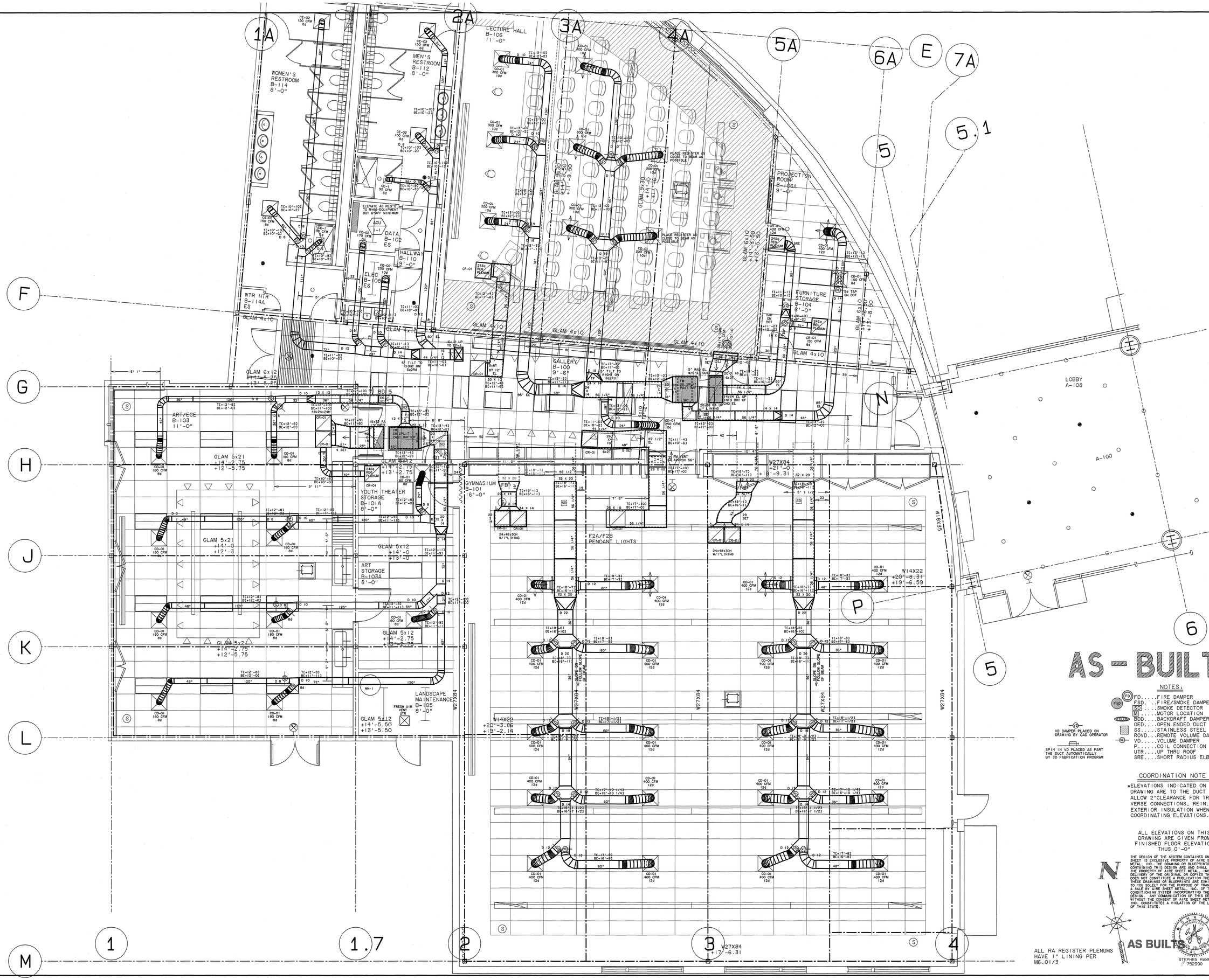

NOTES:

- FD....FIRE DAMPER
- FSD....FIRE/SMOKE DAMPER
- SD....SMOKE DETECTOR
- M....MOTOR LOCATION
- BDD....BACKDRAFT DAMPER
- OED....OPEN ENDED DUCT
- SS.....STAINLESS STEEL
- ROVD...REMOTE VOLUME DAMPER
- VD.....VOLUME DAMPER
- P.....COIL CONNECTION SIDE
- UTR....UP THRU ROOF
- SRE....SHORT RADIUS ELBOW

VD DAMPER PLACED ON DRAWING BY CAD OPERATOR

SPIN IN VD PLACED AS PART THE DUCT AUTOMATICALLY BY 3D FABRICATION PROGRAM

COORDINATION NOTE

*ELEVATIONS INDICATED ON THIS DRAWING ARE TO THE DUCT BODY. ALLOW 2"CLEARANCE FOR TRANSVERSE CONNECTIONS, REIN. AND EXTERIOR INSULATION WHEN COORDINATING ELEVATIONS.

ALL ELEVATIONS ON THIS DRAWING ARE GIVEN FROM FINISHED FLOOR ELEVATION THUS 0'-0"

THE DESIGN OF THE SYSTEM CONTAINED ON THIS SHEET IS EXCLUSIVE PROPERTY OF AIRE SHEET METAL, INC. THE DRAWING OR BLUEPRINTS CONTAINING THIS DESIGN ARE AND SHALL REMAIN THE PROPERTY OF AIRE SHEET METAL, INC. THE DELIVERY OF THE ORIGINAL OR COPIES THEREOF DOES NOT CONSTITUTE A PUBLICATION THEREOF. THESE DRAWINGS OR BLUEPRINTS ARE TRANSMITTED FOR BIDDING OR CONSTRUCTION PURPOSES ONLY. A SALE OF AIRE SHEET METAL, INC. OF THE AIR CONDITIONING SYSTEM INCORPORATING THE WITHIN DESIGN. ANY COMMUNICATION OF THIS DESIGN, WITHOUT THE CONSENT OF AIRE SHEET METAL, INC. CONSTITUTES A VIOLATION OF THE LAWS OF THIS STATE.

ALL RA REGISTER PLENUMS HAVE 1" LINING PER M6.01/3

AS BUILTS

STEPHEN RAMM
752990

COORDINATION

COORDINATION	SIGNATURE	DATE
GENERAL CONTR.		
ELECTRICAL WORK		
HVAC PIPING		
PLUMBING		
FIRE PROTECTION		
ELECTRICAL		
ORT WALL		

NO.	DATE	REVISION
1	9/29/06	ENGINEERING REVIEW
2	7/16/07	AS BUILT

AIRE SHEET METAL, INC.
MECHANICAL CONTRACTORS
P.O. BOX 5629 * 1973 E. BAYSHORE ROAD
REDWOOD CITY, CALIFORNIA 94063
STATE CONTRACTOR'S LICENSE NO. 271264
PHONE (650) 364-8081

FIRST FLOOR HVAC PLAN
MULTI PURPOSE BUILDING B

VALLEJO EDUCATION CENTER
SOLANO COMMUNITY COLLEGE DISTRICT
545 COLUMBUS PARKWAY
VALLEJO, CALIFORNIA 94591

DATE	September 11, 2006
SCALE	1/4" = 1'-0"
DRAWN BY	LAMMSGATE
REF DWG.	M2.12
JOB NO.	3141
DRAWING NO.	V2.12
REVISION NO.	AB

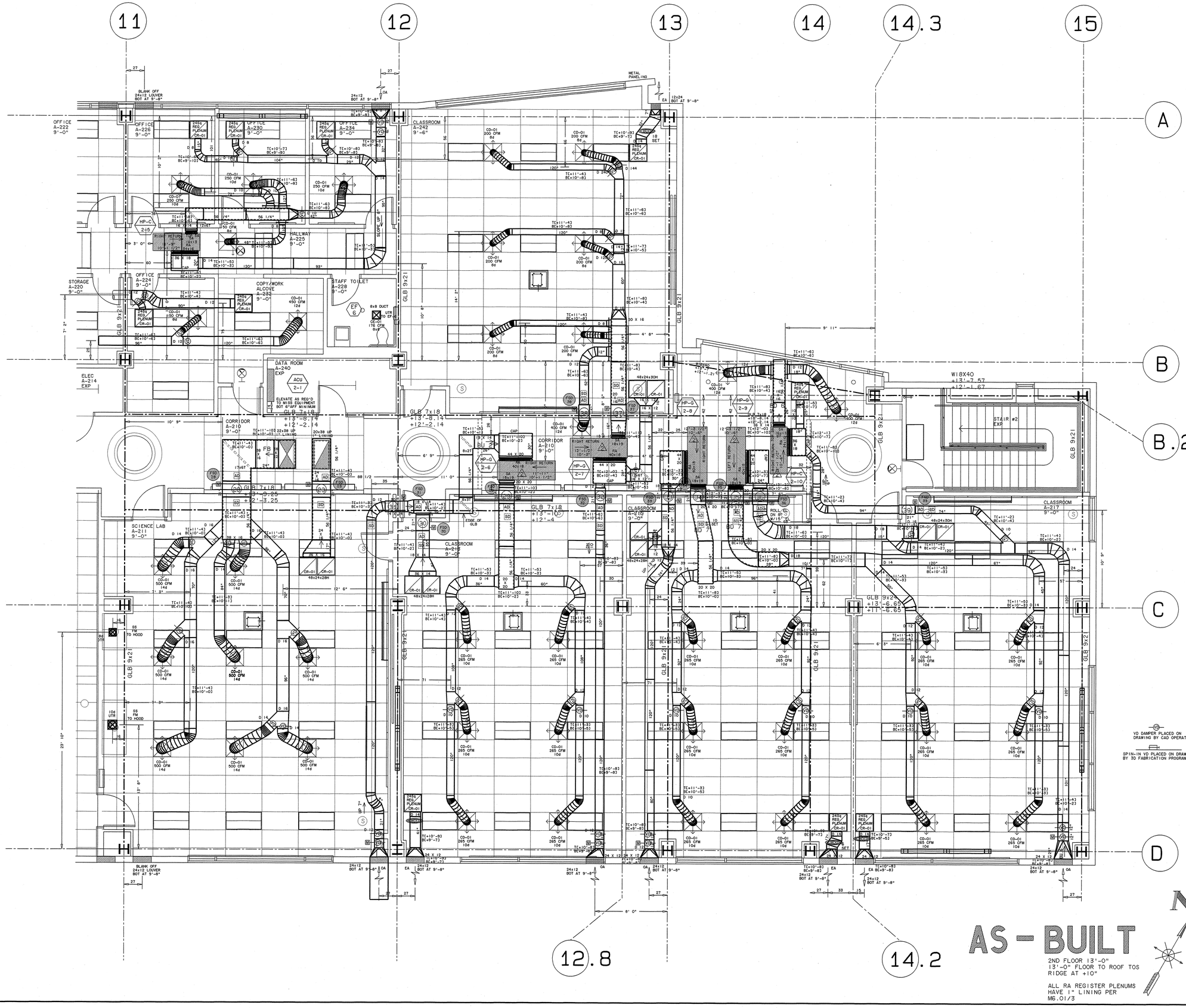

NOTES:

- FD....FIRE DAMPER
- FSD...FIRE/SMOKE DAMPER
- SD....SMOKE DETECTOR
- M.....MOTOR LOCATION
- BDD...BACKDRAFT DAMPER
- OED...OPEN ENDED DUCT
- SS....STAINLESS STEEL
- RDVD..REMOTE VOLUME DAMPER
- VD....VOLUME DAMPER
- P.....COIL CONNECTION SIDE
- UTR...UP THRU ROOF
- SRE...SHORT RADIUS ELBOW

VD DAMPER PLACED ON DRAWING BY CAD OPERATOR

SPIN-IN VD PLACED ON DRAWING BY 3D FABRICATION PROGRAM

COORDINATION NOTE

*ELEVATIONS INDICATED ON THIS DRAWING ARE TO THE DUCT BODY. ALLOW 2"CLEARANCE FOR TRANSVERSE CONNECTIONS, REIN. AND EXTERIOR INSULATION WHEN COORDINATING ELEVATIONS.

ALL ELEVATIONS ON THIS DRAWING ARE GIVEN FROM FINISHED FLOOR ELEVATION THUS 0'-0"

THE DESIGN OF THE SYSTEM CONTAINED ON THIS SHEET IS EXCLUSIVE PROPERTY OF AIRE SHEET METAL, INC. THE DRAWING OR BLUEPRINTS CONTAINING THIS DESIGN ARE AND SHALL REMAIN THE PROPERTY OF AIRE SHEET METAL, INC. THE DELIVERY OF THE ORIGINAL OR COPIES THEREOF DOES NOT CONSTITUTE A PUBLICATION THEREOF. THESE DRAWINGS OR BLUEPRINTS ARE EXHIBITED TO YOU SOLELY FOR THE PURPOSE OF TRANSACTING A SALE BY AIRE SHEET METAL, INC. OF THE AIR CONDITIONING SYSTEM INCORPORATING THE WITHIN DESIGN. ANY COMMUNICATION OF THIS DESIGN, WITHOUT THE CONSENT OF AIRE SHEET METAL, INC., CONSTITUTES A VIOLATION OF THE LAWS OF THIS STATE.

AS-BUILT

2ND FLOOR 13'-0" 13'-0" FLOOR TO ROOF TOS RIDGE AT +10"

ALL RA REGISTER PLENUMS HAVE 1" LINING PER M6.01/3

N

AS BUILTS

STEPHEN RAMM 752990

COORDINATION

COORDINATION	SIGNATURE	DATE
GENERAL CONTR		
HVAC DUCTWORK		
HVAC PIPING		
PLUMBING		
FIRE PROTECTION		
ELECTRICAL		
DRY WALL		

AIRE SHEET METAL, INC.
MECHANICAL CONTRACTORS
P.O. BOX 5629 * 1973 E. BAYSHORE ROAD
REDWOOD CITY, CALIFORNIA 94063
STATE CONTRACTOR'S LICENSE NO. 271264
PHONE (650) 364-8081

NO.	DATE	REVISION
1	9/29/06	ENGINEERING REVIEW, UNIT/DUCT ELEV'S ADJ AS REC
2	10/6/06	COND LINE COORD
3	7/16/07	AS BUILT

SECOND FLOOR HVAC PLAN
CLASSROOM BUILDING

VALLEJO EDUCATION CENTER
SOLANO COMMUNITY COLLEGE DISTRICT

545 COLUMBUS PARKWAY
VALLEJO, CALIFORNIA 94591

DATE	JULY 22, 2006
SCALE	1/4" = 1'-0"
DRAWN BY	LAMMSGATE
REF DWG.	M2.21
JOB NO.	3141
DRAWING NO.	V2.21A
REVISION NO.	AB

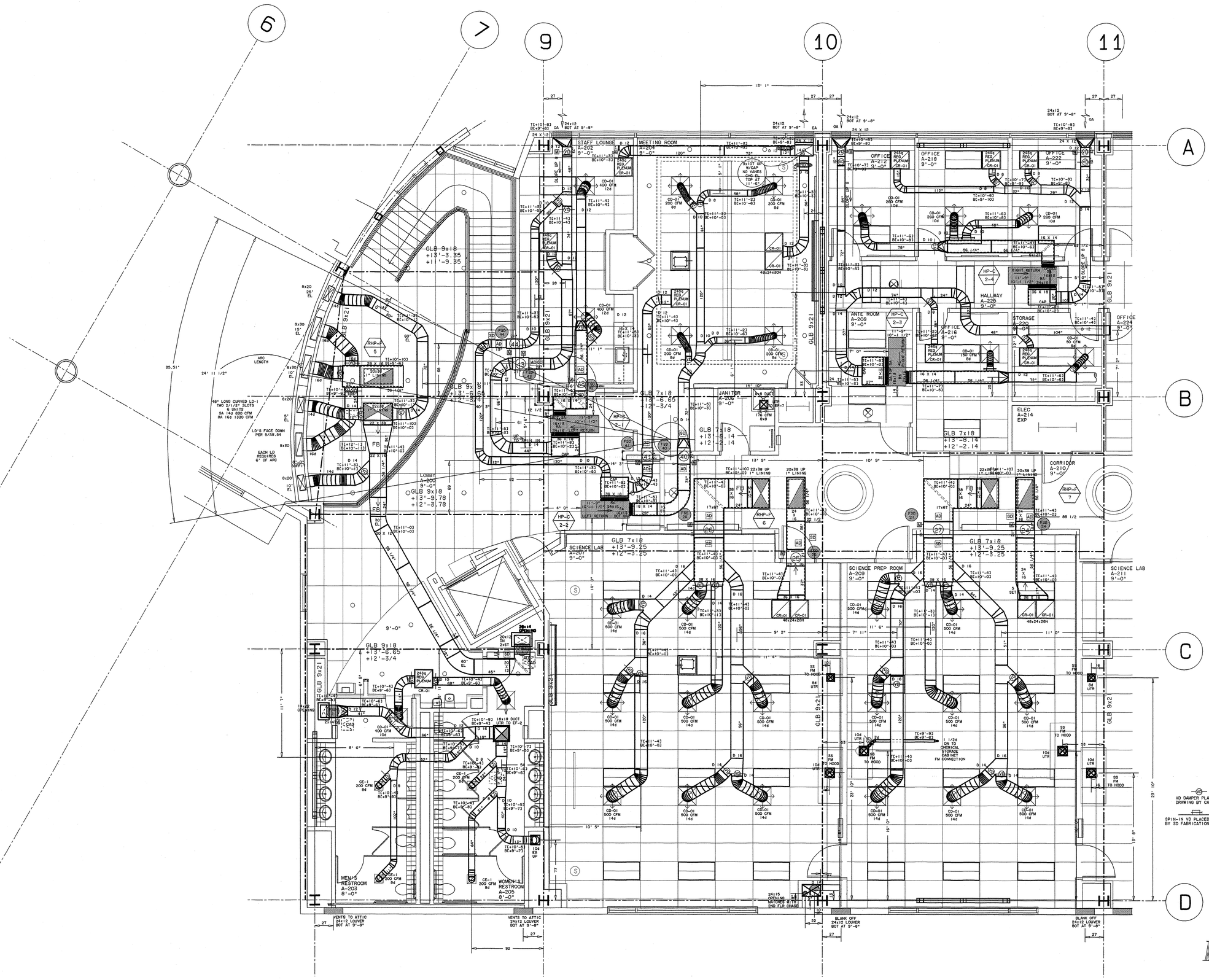

AS-BUILT

2ND FLOOR 13'-0"
13'-0" FLOOR TO ROOF TOS
RIDGE AT +10"

ALL RA REGISTER PLENUMS HAVE 1" LINING PER M6.01/3

AS BUILTS

STEPHEN RAMM
752990

NOTES:

- FD....FIRE DAMPER
- FSD...FIRE/SMOKE DAMPER
- SD....SMOKE DETECTOR
- M.....MOTOR LOCATION
- BDD...BACKDRAFT DAMPER
- OED...OPEN ENDED DUCT
- SS.....STAINLESS STEEL
- ROVD...REMOTE VOLUME DAMPER
- VD.....VOLUME DAMPER
- P.....COIL CONNECTION SIDE
- UTR....UP THRU ROOF
- SRE....SHORT RADIUS ELBOW
- CAD....CEILING ACCESS DOOR

VD DAMPER PLACED ON DRAWING BY CAD OPERATOR

SPIN-IN VD PLACED ON DRAWING BY 3D FABRICATION PROGRAM

COORDINATION NOTE

*ELEVATIONS INDICATED ON THIS DRAWING ARE TO THE DUCT BODY. ALLOW 2"CLEARANCE FOR TRANSVERSE CONNECTIONS, REIN. AND EXTERIOR INSULATION WHEN COORDINATING ELEVATIONS.

ALL ELEVATIONS ON THIS DRAWING ARE GIVEN FROM FINISHED FLOOR ELEVATION THUS 0'-0"

THE DESIGN OF THE SYSTEM CONTAINED ON THIS SHEET IS EXCLUSIVE PROPERTY OF AIRE SHEET METAL, INC. THE DRAWING OR BLUEPRINTS CONTAINING THIS DESIGN ARE AND SHALL REMAIN THE PROPERTY OF AIRE SHEET METAL, INC. THE DELIVERY OF THE ORIGINAL OR COPIES THEREOF DOES NOT CONSTITUTE A PUBLICATION THEREOF. THESE DRAWINGS OR BLUEPRINTS ARE EXHIBITED TO YOU SOLELY FOR THE PURPOSE OF TRANSACTING A SALE BY AIRE SHEET METAL, INC., OF THE AIR CONDITIONING SYSTEM INCORPORATING THE WITHIN DESIGN. ANY OTHER USE OF THIS DESIGN, WITHOUT THE CONSENT OF AIRE SHEET METAL, INC., CONSTITUTES A VIOLATION OF THE LAWS OF THIS STATE.

COORDINATION

COORDINATION	SIGNATURE	DATE
GENERAL CONTR		
HVAC DUCTWORK		
HVAC PIPING		
PLUMBING		
FIRE PROTECTION		
ELECTRICAL		
DRY WALL		

AIRE SHEET METAL, INC.
MECHANICAL CONTRACTORS
P.O. BOX 5629 × 1973 E. BAYSHORE ROAD
REDWOOD CITY, CALIFORNIA 94063
STATE CONTRACTOR'S LICENSE NO. 271264
PHONE (650) 364-8081

NO.	DATE	REVISION
1	9/29/06	ENGINEERING REVIEW, UNIT/DUCT ELEV'S ADJ AS NEC
2	7/16/07	AS BUILT

SECOND FLOOR HVAC PLAN
CLASSROOM BUILDING

VALLEJO EDUCATION CENTER
SOLANO COMMUNITY COLLEGE DISTRICT

545 COLUMBUS PARKWAY
VALLEJO, CALIFORNIA 94591

DATE	JULY 22, 2006
SCALE	1/4" = 1'-0"
DRAWN BY	LAMMSGATE
REF DWG.	M2.21
JOB NO.	3141
DRAWING NO.	V2.21B
REVISION NO.	AB

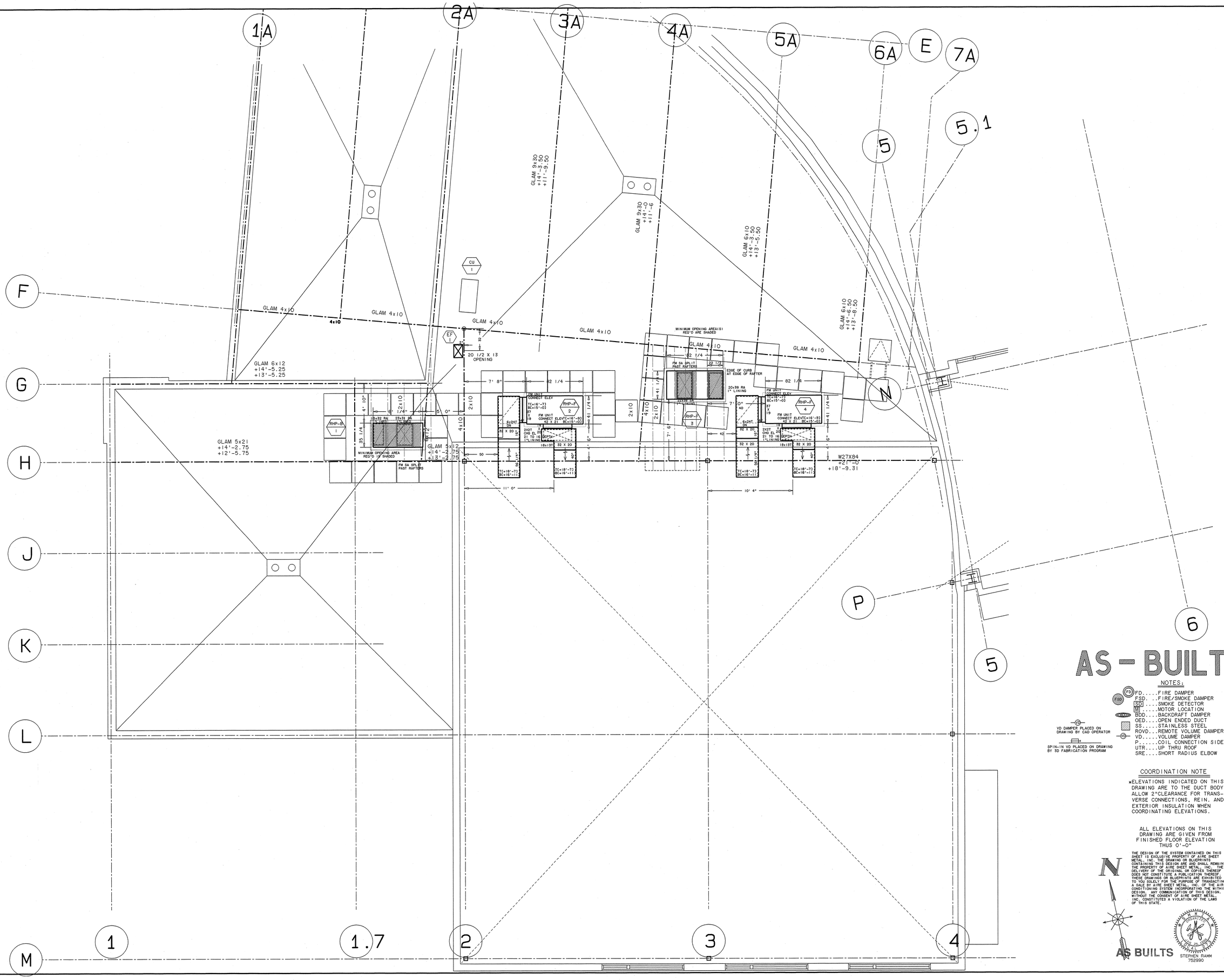

AS-BUILT

NOTES:

- FD....FIRE DAMPER
- FSD...FIRE/SMOKE DAMPER
- SD....SMOKE DETECTOR
- M.....MOTOR LOCATION
- BDD...BACKDRAFT DAMPER
- OED...OPEN ENDED DUCT
- SS....STAINLESS STEEL
- ROVD..REMOTE VOLUME DAMPER
- VD.....VOLUME DAMPER
- P.....COIL CONNECTION SIDE
- UTR...UP THRU ROOF
- SRE...SHORT RADIUS ELBOW

VD DAMPER PLACED ON DRAWING BY CAD OPERATOR

SPIN-IN VD PLACED ON DRAWING BY SD FABRICATION PROGRAM

COORDINATION NOTE

*ELEVATIONS INDICATED ON THIS DRAWING ARE TO THE DUCT BODY. ALLOW 2"CLEARANCE FOR TRANSVERSE CONNECTIONS, REIN. AND EXTERIOR INSULATION WHEN COORDINATING ELEVATIONS.

ALL ELEVATIONS ON THIS DRAWING ARE GIVEN FROM FINISHED FLOOR ELEVATION THUS 0'-0"

THE DESIGN OF THE SYSTEM CONTAINED ON THIS SHEET IS EXCLUSIVE PROPERTY OF AIRE SHEET METAL, INC. THE DRAWING OR BLUEPRINTS CONTAINING THIS DESIGN ARE AND SHALL REMAIN THE PROPERTY OF AIRE SHEET METAL, INC. THE DELIVERY OF THE ORIGINAL OR COPIES THEREOF DOES NOT CONSTITUTE A PUBLICATION THEREOF. THESE DRAWINGS OR BLUEPRINTS ARE EXHIBITED TO YOU SOLELY FOR THE PURPOSE OF TRANSACTING A SALE BY AIRE SHEET METAL, INC. OF THE AIR CONDITIONING SYSTEM INCORPORATING THE WITHIN DESIGN. ANY COMMUNICATION OF THIS DESIGN, WITHOUT THE CONSENT OF AIRE SHEET METAL, INC. CONSTITUTES A VIOLATION OF THE LAWS OF THIS STATE.

AS BUILTS

STEPHEN RAMM
752990

COORDINATION

COORDINATION	SIGNATURE	DATE
GENERAL CONTR		
HVAC DUCTWORK		
PLUMBING		
ELECTRICAL		
FIRE PROTECTION		
ELECTRICAL		
DRY WALL		

AIRE SHEET METAL, INC.
MECHANICAL CONTRACTORS
P.O. BOX 5629 * 1973 E. BAYSHORE ROAD
REDWOOD CITY, CALIFORNIA 94063
STATE CONTRACTOR'S LICENSE NO. 271264
PHONE (650) 364-8081

NO.	DATE	REVISION
1	9/29/06	ENGINEERING REVIEW
2	7/16/07	AS BUILT

ROOF HVAC PLAN
MULTI PURPOSE BUILDING B
VALLEJO EDUCATION CENTER
SOLANO COMMUNITY COLLEGE DISTRICT
545 COLUMBUS PARKWAY
VALLEJO, CALIFORNIA 94591

DATE	JULY 28, 2006
SCALE	1/4" = 1'-0"
DRAWN BY	LAMMSGATE
REF DWG.	M2.22
JOB NO.	3141
DRAWING NO.	V2.22
REVISION NO.	AB

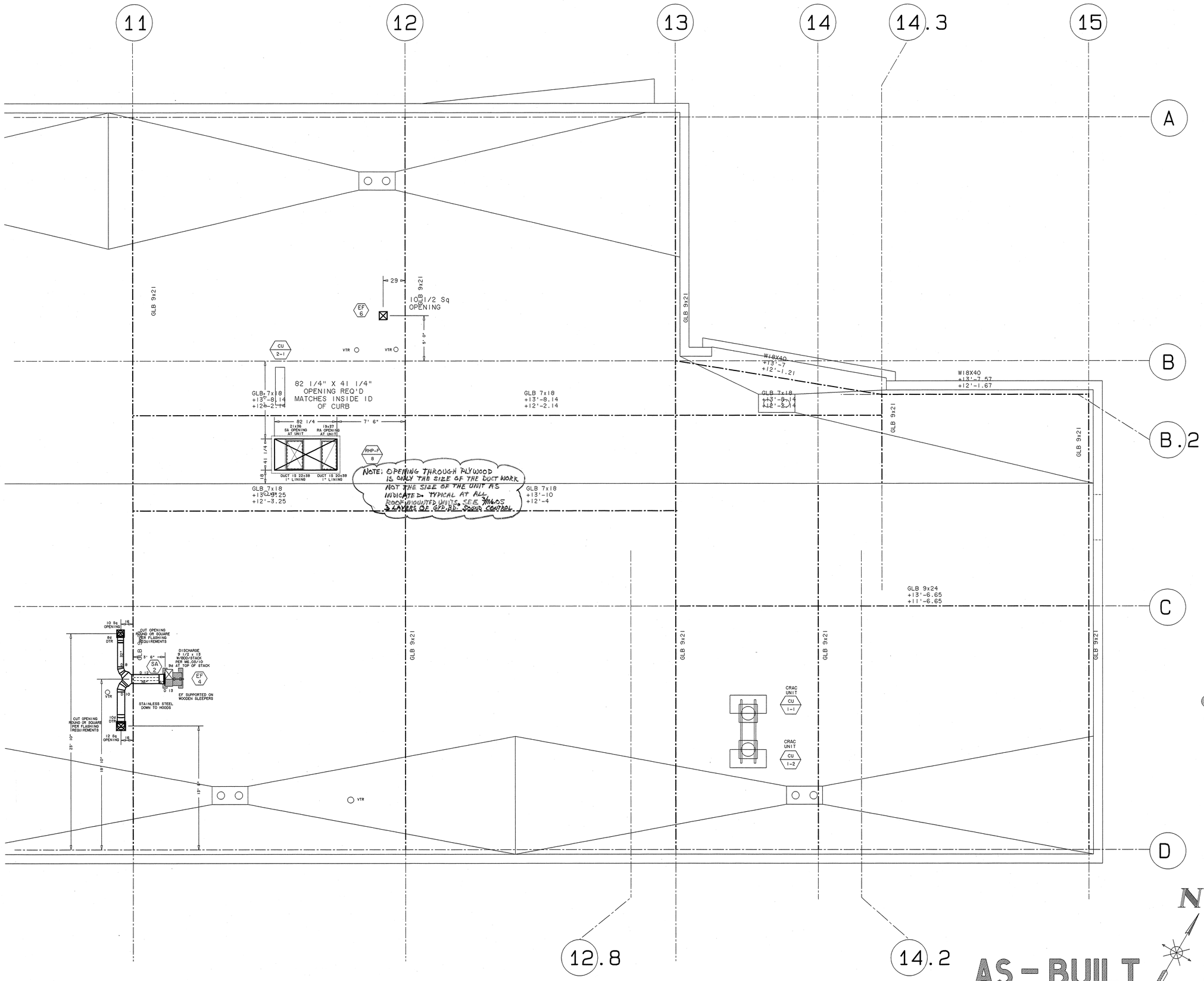

NOTES:

FD.....FIRE DAMPER
FSD....FIRE/SMOKE DAMPER
SD.....SMOKE DETECTOR
M.....MOTOR LOCATION
BDD....BACKDRAFT DAMPER
OED....OPEN ENDED DUCT
SS.....STAINLESS STEEL
ROVD...REMOTE VOLUME DAMPER
VD.....VOLUME DAMPER
P.....COIL CONNECTION SIDE
UTR....UP THRU ROOF
SRE....SHORT RADIUS ELBOW

COORDINATION NOTE

*ELEVATIONS INDICATED ON THIS DRAWING ARE TO THE DUCT BODY. ALLOW 2"CLEARANCE FOR TRANSVERSE CONNECTIONS, REIN. AND EXTERIOR INSULATION WHEN COORDINATING ELEVATIONS.

ALL ELEVATIONS ON THIS DRAWING ARE GIVEN FROM FINISHED FLOOR ELEVATION THUS 0'-0"

THE DESIGN OF THE SYSTEM CONTAINED ON THIS SHEET IS EXCLUSIVE PROPERTY OF AIRE SHEET METAL, INC. THE DRAWING OR BLUEPRINTS CONTAINING THIS DESIGN ARE AND SHALL REMAIN THE PROPERTY OF AIRE SHEET METAL, INC. THE DELIVERY OF THE ORIGINAL OR COPIES THEREOF DOES NOT CONSTITUTE A PUBLICATION THEREOF. THESE DRAWINGS OR BLUEPRINTS ARE EXHIBITED TO YOU SOLELY FOR THE PURPOSE OF TRANSACTING A SALE BY AIRE SHEET METAL, INC. OF THE AIR CONDITIONING SYSTEM INCORPORATING THE WITHIN DESIGN. ANY COMMUNICATION OF THIS DESIGN, WITHOUT THE CONSENT OF AIRE SHEET METAL, INC. CONSTITUTES A VIOLATION OF THE LAWS OF THIS STATE.

AS-BUILT

AS BUILTS

STEPHEN RAMM 752990

COORDINATION

COORDINATION	SIGNATURE	DATE
GENERAL CONTR		
HVAC DUCTWORK		
HVAC PIPING		
PLUMBING		
FIRE PROTECTION		
ELECTRICAL		
DRY WALL		

AIRE SHEET METAL, INC.
MECHANICAL CONTRACTORS
P.O. BOX 5629 * 1973 E. BAYSHORE ROAD
REDWOOD CITY, CALIFORNIA 94063
STATE CONTRACTOR'S LICENSE NO. 271264
PHONE (650) 364-8081

NO.	DATE	REVISION
1	9/29/06	ENGINEERING REVIEW
2	7/16/07	AS BUILT

ROOF HVAC PLAN
CLASSROOM BUILDING

VALLEJO EDUCATION CENTER
SOLANO COMMUNITY COLLEGE DISTRICT

545 COLUMBUS PARKWAY
VALLEJO, CALIFORNIA 94591

DATE JULY 10, 2006
SCALE 1/4" = 1'-0"
DRAWN BY LAMMSGATE
REF DWG. M2.31
JOB NO. 3141
DRAWING NO. V2.31A
REVISION NO. AB

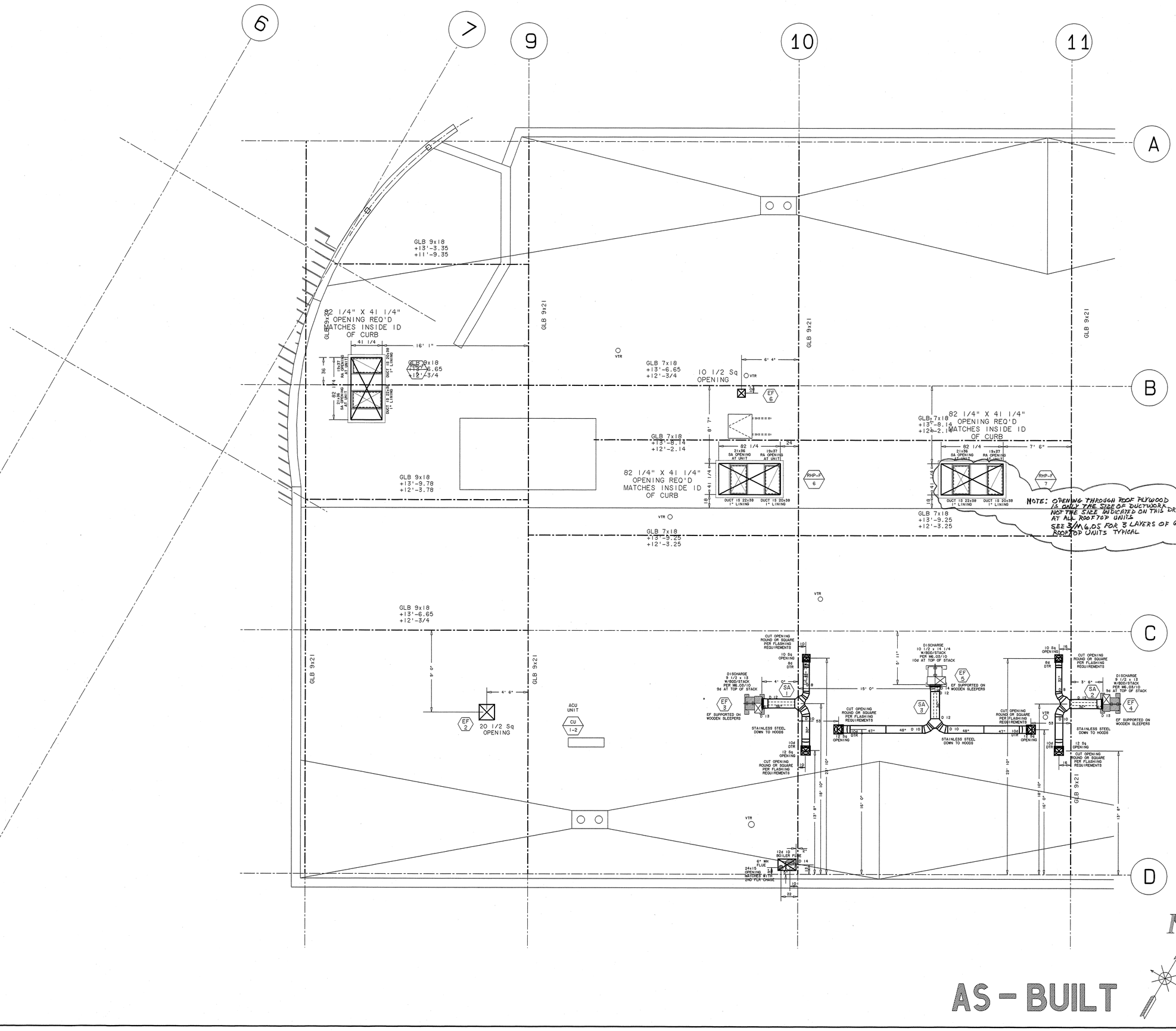

NOTES:

- FD....FIRE DAMPER
- FSD...FIRE/SMOKE DAMPER
- SD....SMOKE DETECTOR
- M.....MOTOR LOCATION
- BDD....BACKDRAFT DAMPER
- OED....OPEN ENDED DUCT
- SS.....STAINLESS STEEL
- ROVD...REMOTE VOLUME DAMPER
- VD.....VOLUME DAMPER
- P.....COIL CONNECTION SIDE
- UTR....UP THRU ROOF
- SRE....SHORT RADIUS ELBOW

COORDINATION NOTE

*ELEVATIONS INDICATED ON THIS DRAWING ARE TO THE DUCT BODY. ALLOW 2"CLEARANCE FOR TRANSVERSE CONNECTIONS, REIN. AND EXTERIOR INSULATION WHEN COORDINATING ELEVATIONS.

ALL ELEVATIONS ON THIS DRAWING ARE GIVEN FROM FINISHED FLOOR ELEVATION THUS 0'-0"

THE DESIGN OF THE SYSTEM CONTAINED ON THIS SHEET IS EXCLUSIVE PROPERTY OF AIRE SHEET METAL, INC. THE DRAWING OR BLUEPRINTS CONTAINING THIS DESIGN ARE AND SHALL REMAIN THE PROPERTY OF AIRE SHEET METAL, INC. THE DELIVERY OF THE ORIGINAL OR COPIES THEREOF DOES NOT CONSTITUTE A PUBLICATION THEREOF. THESE DRAWINGS OR BLUEPRINTS ARE EXHIBITED TO YOU SOLELY FOR THE PURPOSE OF TRANSACTING A SALE BY AIRE SHEET METAL, INC. OF THE AIR CONDITIONING SYSTEM INCORPORATING THE WITHIN DESIGN. ANY COMMUNICATION OF THIS DESIGN, WITHOUT THE CONSENT OF AIRE SHEET METAL, INC. CONSTITUTES A VIOLATION OF THE LAWS OF THIS STATE.

AS-BUILT

AS BUILTS

STEPHEN RAMM
752990

COORDINATION

COORDINATION	SIGNATURE	DATE
GENERAL CONTR.		
HVAC DUCTWORK		
HVAC EQUIPMENT		
PLUMBING		
FIRE PROTECTION		
ELECTRICAL		
DRY WALL		

AIRE SHEET METAL, INC.
MECHANICAL CONTRACTORS
P.O. BOX 5629 * 1973 E. BAYSHORE ROAD
REDWOOD CITY, CALIFORNIA 94063
STATE CONTRACTOR'S LICENSE NO. 271264
PHONE (650) 364-8081

NO.	DATE	REVISION
1	9/29/06	ENGINEERING REVIEW
2	7/16/07	AS BUILT

ROOF HVAC PLAN
CLASSROOM BUILDING

VALLEJO EDUCATION CENTER
SOLANO COMMUNITY COLLEGE DISTRICT

545 COLUMBUS PARKWAY
VALLEJO, CALIFORNIA 94591

DATE	JULY 10, 2006
SCALE	1/4" = 1'-0"
DRAWN BY	LAMMSGATE
REF. DWG.	M2.31
JOB NO.	3141
DRAWING NO.	V2.31B
REVISION NO.	AB