VACAVILLE CLASSROOM BUILDING (ANNEX) RENOVATION PROJECT

SOLANO COMMUNITY COLLEGE DISTRICT
2000 NORTH VILLAGE PARKWAY, VACAVILLE, CA 95688
PROJECT NO:
APPLICATION NO:
SUBMITTAL

GENERAL NOTES

1. CONTRACT DOCUMENTS ARE COMPLEMENTARY, THE CONTRACTOR SHALL, BEFORE STARTING EACH PORTION OF THE WORK, CAREFULLY STUDY AND COMPARE THE VARIOUS CONTRACT DOCUMENTS RELATIVE TO THAT PORTION OF THE WORK, AS WELL AS THE INFORMATION FURNISHED BY THE OWNER, SHALL TAKE FIELD MEASUREMENTS OF ANY EXISTING CONDITIONS RELATED TO THAT PORTION OF THE WORK, AND SHALL OBSERVE ANY CONDITIONS AT THE SITE AFFECTING IT. THESE OBLIGATIONS ARE FOR THE PURPOSE OF FACILITATING COORDINATION AND CONSTRUCTION BY THE CONTRACTOR AND ARE NOT FOR THE PURPOSE OF DISCOVERING ERRORS, OMISSIONS, OR INCONSISTENCIES IN THE CONTRACT DOCUMENTS; HOWEVER, THE CONTRACTOR SHALL PROMPTLY REPORT TO THE ARCHITECT ANY ERRORS, INCONSISTENCIES OR OMISSIONS DISCOVERED BY OR MADE KNOWN TO THE CONTRACTOR AS A REQUEST FOR INFORMATION IN SUCH FORM AS THE ARCHITECT MAY REQUIRE.

2. DEMO, CUTTING AND PATCHING SHALL BE PERFORMED AS NECESSARY FOR THE PERFORMANCE AND INSTALLATION OF WORK SHOWN AND SHALL MEET THE STANDARD OF CARE FOR EACH OF THE DISCIPLINES REQUIRED TO PERFORM THE WORK.

3. UNOBSTRUCTED ACCESS TO EXISTING EXITS AND ANY EMERGENCY LIGHTING SHALL BE MAINTAINED THROUGHOUT CONSTRUCTION. ALL EXITS, EXIT LIGHTING, FIRE PROTECTIVE DEVICES SHALL BE MAINTAINED FOR THE DURATION OF THE WORK OF THE PROJECT.

4. ALL WORK PERFORMED UNDER THESE DOCUMENTS SHALL BE IN ACCORDANCE WITH ALL APPLICABLE CODES AND REQUIREMENTS. ALL NEW WORK SHALL NOT DIMINISH ANY EXISTING CONDITIONS WITH RESPECT TO THEIR ADHERENCE TO APPLICABLE CODES AND REQUIREMENTS (TYP.). THIS SHALL INCLUDE INSPECTIONS AND SUPERVISION OF WORK BY A LICENSED INSPECTOR OF RECORD (IOR) IN ACCORDANCE WITH DSA.

5. THESE DOCUMENTS ARE TO REFLECT GENERAL INTENT OF THE ARCHITECTURAL SCOPE OF WORK. THE INFORMATION SHOWN IN THESE DOCUMENT SHOW PURPOSE AND INTENT AND ARE NOT COMPLETE IN EVERY DETAIL. THE CONTRACTOR SHALL COMPLY WITH THEIR INTENT AND MEANING, TAKEN AS A WHOLE, AND SHALL NOT AVAIL ITSELF OF ANY MANIFEST ERROR, OMISSION, AND DISCREPANCY OF AMBIGUITY WHICH APPEAR IN THE DOCUMENTS.

6. CONTRACTOR SHALL ENGAGE USA TO VERIFY AND LOCATE ANY (E) UTILITIES WITHIN AREA OF SCOPE OF WORK PRIOR TO COMMENCENT OF DEMO WORK.

ABBREVIATIONS

ABV. - Above
ADD. - Addition
ADJ. - Adjust
A.F.F. - Above Finished Floor
ALT. - Alternate
APP'D. - Approved
ARCH. - Architect,
ASPH. - Asphalt
BLDG. - Building
BM. - Beam
B.O. - Bottom of
B.U.R./BUR - Built up Roof
C.B. - Catch Basin
C.D. - Construction document
C.L. - Center Line
CL. - Closet
CLG. - Ceiling
C.O. - Clean Out
COL. - Column
CONT. - Continuous
CONTR. - Contractor
CONC. - Concrete
DBL. - Double
DEMO. - Demolition
DIA. - Diameter
DIM. - Dimension
DN. - Down
DR. - Door
EA. - Each
E.F. - Exhaust fan
ELEV. - Elevation
ELECT. - Electric, electrical
EQ. - Equal
(E) - Existing
EXT. - Exterior
F.A. - Fire alarm
F.D. - Floor drain
F.E. - Fire extinguisher
FIN. - Finish
FLR. - Floor
GA. - Gauge
GALV. - Galvanized
G.C. - General Contractor
G.F.C.I. - Ground Fault Circuit Interrupt
G.F.I. - Ground Fault Interrupt
GL. - Glass
GWB Gypsum Wall Board
H.B. - Hose bib
HDW. - Hardware
HGT. - Height
H.V.A.C. - Heating, Venting and Air Conditioning
INV. - Invert
INSUL. - Insulation
INT. - Interior
JCT. - Junction
JST. - Joist
LIN. - Linear
LT. - Light
LTG. - Lighting
MTL. - Metal
MAX. - Maximum
MECH. - Mechanical
MFR - Manufacturer's
MIN. - Minimum
MTL. - Metal (steel)
(N) - New
N.T.S. - Not to scale
O.C. - On center
OPNG. - Opening
PTD. - Painted
PART. - Partition
PL - Property Line
PLAM - Plastic laminate
PLYWD. - Plywood
P.S.F. - Pounds per square foot
P.S.I. - Pounds per square inch
RAD. - Radius
R.D - Roof drain
R.O. - Rough Opening
REF. - Reference
REINF. - Reinforced
RET. - Return
REV. - Revision
RM. - Room
RMV. - Remove
SED - See Electrical Docs
SHT'G. - Sheathing
SIM. - Similar
SMD - See Mechanical Docs
SPD - See Plumbing Docs
SPECS. - Specifications
SSD - See Structural Docs
ST. - Square feet
SI. - Square inches
STD. - Standard
STL. - Steel
S.Y. - Square yard
SYS. - System
T.O. - Top of
THR. - Threaded
TYP. - Typical
UNF. - Unfinished
V.B. - Vapor barrier
V.I.F. - Verify in field
VCT. - Vinyl composition tile
WP. - Weatherproof
WD. - Wood

LEGEND

NORTH ARROW

DOOR REFERENCE
102
DOOR NUMBER

COLUMN OR GRID LINE
A
1
LETTERS LEFT TO RIGHT, NUMBERS TOP TO BOTTOM.

REVISION REFERENCE
3
REVISION NUMBER
CLOUD AROUND REVISION

BUILDING SECTION
A
A4.1
SECTION IDENTIFICATION
SHEET WHERE SECTION IS SHOWN

MATCH LINE
SHADED HALF IS THE SIDE CONSIDERED

CENTER LINE

EXTERIOR ELEVATION
2
A5.1
ELEVATION IDENTIFICATION
SHEET WHERE ELEVATION IS SHOWN

PROPERTY LINE

SECTION DETAIL
1
A8.2
DETAIL IDENTIFICATION
SHEET WHERE DETAIL IS SHOWN

ROOM IDENTIFICATION
OFFICE
A101
1234
ROOM NAME
ROOM NUMBER
ROOM AREA

INTERIOR ELEVATION – MULTIPLE VIEWS
1 2 3 4
A6.1
ELEVATION IDENTIFICATION
SHEET WHERE ELEVATION IS SHOWN

KEY NOTE
1
CORRESPONDING NOTE NUMBER

1
WINDOW TAG

123
DOOR TAG

VICINITY MAP

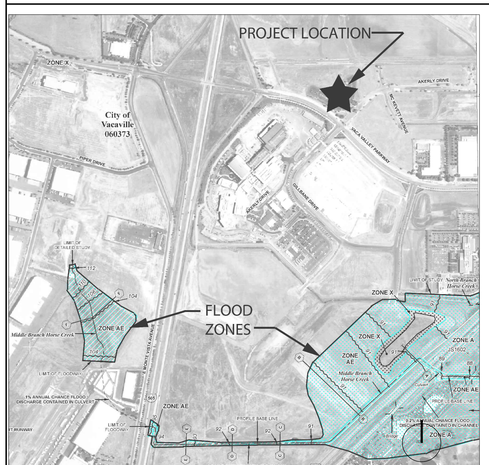

FLOOD MAP INFO: FEMA MAP #06095C0164E

PROJECT SCOPE

SCOPE OF WORK IS BASED ON DSA APPROVED 02-REH-10012 (9/15/2015). REH SHALL FORM A PART OF THE REVIEW DOCUMENTS AND HAS BEEN UPDATED TO INCLUDE ADDITIONAL TESTING DATA. THE EXISTING BUILDING IS A ONE-STORY, 16,400 SF BUILDING AND 5,112 SF EXTERIOR COVERED WALKWAY FOR A TOTAL OF: 21,512SF, FULLY SPRINKLED. SCOPE OF WORK SHALL BE FOR THE FOR THE REHABILITATION OF THE (E) BUILDING FOR COMPLIANCE TO THE 2016 CALIFORNIA BUILDING STANDARDS CODE (CBC) AS OUTLINED IN THE REH.

EXISTING BUILDING TYPE: III-B
PROPOSED BUILDING TYPE: V-B (SEE A0.03 EGRESS PLAN)

EXISTING OCCUPANCY: B/A-3
PROPOSED OCCUPANCY: B/A-3 (SEE A0.03)

EXISTING BUILDING IS CURRENTLY UNOCCUPIED AND SHALL REMAIN UNOCCUPIED UNTIL BUILDING IS CERTIFIED BY DSA.

VERIFICATION OF PATH OF TRAVEL

"DESIGN PROFESSIONAL IN GENERAL RESPONSIBLE CHARGE STATEMENT: THE POT IDENTIFIED IN THESE CONSTRUCTION DOCUMENTS IS COMPLIANT WITH THE CURRENT APPLICABLE CALIFORNIA BUILDING CODE ACCESSIBILITY PROVISIONS FOR PATH OF TRAVEL REQUIREMENTS FOR ALTERATIONS, ADDITIONS AND STRUCTURAL REPAIRS. AS PART OF THE DESIGN OF THIS PROJECT, THE POT WAS EXAMINED AND ANY ELEMENTS, COMPONENTS OR PORTIONS OF THE POT THAT WERE DETERMINED TO BE NONCOMPLIANT 1) HAVE BEEN IDENTIFIED AND 2) THE CORRECTIVE WORK NECESSARY TO BRING THEM INTO COMPLIANCE HAS BEEN INCLUDED WITHIN THE SCOPE OF THIS PROJECT'S WORK THROUGH DETAILS, DRAWINGS AND SPECIFICATIONS INCORPORATED INTO THESE CONSTRUCTION DOCUMENTS. ANY NONCOMPLIANT ELEMENTS, COMPONENTS OR PORTIONS OF THE POT THAT WILL NOT BE CORRECTED BY THIS PROJECT BASED ON VALUATION THRESHOLD LIMITATIONS OR A FINDING OF UNREASONABLE HARDSHIP ARE SO INDICATED IN THESE CONSTRUCTION DOCUMENTS. DURING CONSTRUCTION, IF POT ITEMS WITHIN THE SCOPE OF THE PROJECT REPRESENTED AS CODE COMPLIANT ARE FOUND TO BE NONCONFORMING BEYOND REASONABLE CONSTRUCTION TOLERANCES, THEY SHALL BE BROUGHT INTO COMPLIANCE WITH THE CBC AS A PART OF THIS PROJECT BY MEANS OF A CONSTRUCTION CHANGE DOCUMENT."

SEE C1, C2, C3, C4 FOR PATH OF TRAVEL REQUIREMENTS.

PROJECT WILL REQUIRE INSPECTOR (IOR) CLASS 1

CGS

DRAWINGS BY OTHERS

Example of Statement of General Conformance and Signature Block per IR A-18

Statement of General Conformance

FOR ARCHITECTS/ENGINEERS WHO UTILIZE PLANS,
INCLUDING BUT NOT LIMITED TO SHOP DRAWINGS, PREPARED BY OTHER LICENSED DESIGN PROFESSIONALS AND/OR CONSULTANTS

(Application No. TBD_____ **File No.** _____**)**

☒ The drawings or sheets listed on the cover or index sheet
☐ This drawing, page of specifications/calculations

have been prepared by other design professionals or consultants who are licensed and/or authorized to prepare such drawings in this state. It has been examined by me for:

1) design intent and appears to meet the appropriate requirements of Title 24, California Code of Regulations and the project specifications prepared by me, and
2) coordination with my plans and specifications and is acceptable for incorporation into the construction of this project.

The Statement of General Conformance "shall not be construed as relieving me of my rights, duties, and responsibilities under Sections 17302 and 81138 of the Education Code and Sections 4-336, 4-341 and 4-344" of Title 24, Part 1. *(Title 24, Part 1, Section 4-317 (b))*

I certify that: ☒ All drawings or sheets listed on the cover or index sheet
☐ This drawing or page

☒ is/are in general conformance and ☒ have been coordinated	☐ is/are in general conformance and ☐ have been coordinated
Signature **Date**	**Signature** **Date**
Architect or Engineer designated to be in responsible charge _Joshua Cohn_ 07/20/2017	**Architect or Engineer delegated responsibility general for this portion of the work.**
Print Name C-23410 11/30/2017	**Print Name**
License Number **Expiration Date**	**License Number** **Expiration Date**

GENERAL NOTE:
TOPOGRAPHIC: INFORMATION WAS PROVIDED BY SCCD TO CA ARCHITECTS FOR USE AS EXISTING CONDITIONS FOR THIS PROJECT

INDEX

GENERAL DRAWINGS
A0.00 COVER SHEET, INDEX

CIVIL DRAWINGS
C1 SITE PLAN
C2 ACCESSIBLE DETAILS
C3 ENLARGED PLANS
C4 ENLARGED PLANS
C5 PARTIAL SURVEY

ARCHITECTURE DRAWINGS
A0.01 LOCAL FIRE AUTHORITY PLAN
A0.10 ACCESS PLAN
A0.20 ACCESSIBILITY - ADA DETAILS
A0.30 EGRESS PLAN
D1.01 EXISTING/DEMO ROOF PLAN
D1.01-ALT EXISTING/DEMO ROOF PLAN
D2.00 EXISTING/DEMO FLOOR PLAN
D2.01 EXISTING TOILET ROOMS & DRINKING FOUNTAINS
D3.00 EXISTING/DEMO ELEVATIONS
D5.00 DEMO/EXITING INTERIOR ELEVATIONS
D5.01 DEMO/EXISTING INTERIOR RESTROOM ELEVATIONS
D6.00 EXISTING/DEMO RCP
A1.00 SITE PLAN
A1.01 ROOF PLAN
A1.01-ALT ROOF PLAN
A2.00 FLOOR PLAN
A2.01 TOILET ROOMS & DRINKING FOUNTAINS
A3.00 EXTERIOR ELEVATIONS
A3.01-ALT ROOF PARAPET ELEVATIONS
A5.01 INTERIOR ELEVATIONS
A6.00 REFLECTED CEILING PLAN
A8.00 EXTERIOR DETAILS
A8.01 EXTERIOR DETAILS
A8.02 EXTERIOR DETAILS
A8.03 EXTERIOR DETAILS
A8.04 EXTERIOR DETAILS
A9.00 INTERIOR DETAILS
A9.01 INTERIOR DETAILS
A9.02 INTERIOR DETAILS
A9.03 INTERIOR DETAILS

ELECTRICAL DRAWINGS
E0.10 GENERAL NOTES, ABBREV. & LEGENDS
E0.11 ELECTRICAL SPECIFICATIONS
E0.30 ENERGY COMPLIANCE FORMS
E0.40 ENERGY COMPLIANCE FORMS
E0.50 ENERGY COMPLIANCE FORMS
E0.60 ENERGY COMPLIANCE FORMS
E1.00 POWER PLAN
E1.01 POWER PLAN AT ROOF
E2.00 LIGHTING PLAN
E2.10 WIRING DIAGRAMS

FIRE ALARM
FA1.01 FIRE ALARM LEGEND, NOTES, & MOUNTING HEIGHT DETAILS
FA2.00 FIRE ALARM FLOOR PLAN
FA3.00 FIRE ALARM DEVICE DETAILS
FA4.00 FIRE ALARM CALCULATIONS AND RISER DIAGRAM
FA 5.00 FIRE STOP DETAILS

FIRE PROTECTION
FP1-0 FIRE PROTECTION SYSTEM COVER SHEET
FP1-1 FIRE PROTECTION SYSTEM SITE PLAN
FP 2-0 FIRE PROTECTION SYSTEM SITE PLAN
FP-3-0 FIRE PROTECTION SYSTEM SITE PLAN

MP DRAWINGS
M0.1 MECHANICAL NOTES, SYMBOL, LEGEND AND SCHEDULE
M0.2 MECHANICAL TITLE 24
M0.3 HVAC LOAD CALCULATION
M2.1 MECHANICAL DEMO FLOOR PLAN
M2.1D MECHANICAL FLOOR PLAN DEMO
M2.2 MECHANICAL ROOF PLAN
M2.2D MECHANICAL DEMO ROOF PLAN
M4.1 MECHANICAL SCHEDULE
M6.1 MECHANICAL DETAILS
M6.2 MECHANICAL DETAILS
P0.1 PLUMBING NOTES, SYMBOL, LEGEND AND SCHEDULE
P2.1 PLUMBING DEMO FLOOR PLAN
P2.1D PLUMBING FLOOR PLAN DEMO
P2.2D PLUMBING DEMO ROOF PLAN
P4.1 ENLARGED PLUMBING FLOOR PLAN
P6.1 PLUMBING DETAILS

STRUCTURAL DRAWINGS
S0.1 GENERAL NOTES
S0.2 GENERAL NOTES & ABBREVIATIONS
S1.0 TYPICAL DETAILS
S2.1 1ST FLOOR AND FOUNDATION PLAN
S2.2 ROOF FRAMING PLAN
S3.1 WALL ELEVATIONS
S3.2 WALL ELEVATIONS
S4.1 SECTIONS & DETAILS
S4.2 SECTIONS & DETAILS
S4.3 SECTIONS & DETAILS

PROJECT DIRECTORY

DISTRICT
NAME LUCKY LOFTON
EXECUTIVE BOND MANAGER
SOLANO COMMUNITY COLLEGE DISTRICT
ADDRESS 4000 SUISUN VALLEY ROAD
ADDRESS FAIRFIELD CA 94534
PHONE 707-863-7855
PHONE 707-646-7703

PM
NAME KITCHELL CEM - PAM KINZIE
ADDRESS 360 CAMPUS LANE, SUITE 203
ADDRESS FAIRFIELD, CA 94534
PHONE 707-864-7189
EMAIL Pam.Kinzie@solano.edu

ARCHITECT
NAME CA ARCHITECT
ADDRESS 475 GATE FIVE ROAD, SUITE 107
ADDRESS SAUSALITO, CA 94965
PHONE 415-331-7655
PHONE 415-609-7177
EMAIL jcohn@ca-arch.com

CIVIL
NAME FOULK CIVIL ENGINEERING, Inc.
ADDRESS 4777 MANGLES BOULEVARD
ADDRESS FAIRFIELD, CA 94534
PHONE 707-864-0784
PHONE 707-864-0793
EMAIL brad@foulke.com

MEP
NAME EXCEL ENGINEERS
ADDRESS 825 ORANGE AVE
ADDRESS SUNNYVALE, CA 94087
PHONE 408-230-9164
FAX 408-749-9989
EMAIL yuexu_99@yahoo.com

ELECTRICAL
NAME C&N ENGINEERS, INC.
ADDRESS 319 SUTTER STREET, SUITE 202
ADDRESS SAN FRNACISCO, CA 94108
PHONE 415-982-1828
FAX 415-772-8005
EMAIL raymond@cnengr.com

STRUCTURAL
NAME TENNEBAUM-MANHEIM ENGINEERS
ADDRESS 414 MASON STREET, SUITE 605
ADDRESS SAN FRNACISCO, CA 94102
PHONE 415-772-9891
EMAIL dan@tmesf.com

FIRE ALARM
NAME HCI SYSTEMS INC.
ADDRESS 1419 N. MARKET BLVD.
ADDRESS SACRAMENTO, CA 95834
PHONE 916-419-6900
EMAIL sswagerty@hcisystems.net

FIRE PROTECTION
NAME ZARI CONSULTING GROUP, INC.
ADDRESS 755 BAYWOOD DRIVE, 2ND FLOOR
ADDRESS PETALUMA, CA 95834
PHONE 925-381-2322
EMAIL joseph.zari@zaricode.com

CODES & REGULATIONS

2016 BUILDING STANDARDS ADMINISTRATIVE CODE, PART 1, TITLE 24 C.C.R.

2016 CALIFORNIA BUILDING CODE (CBC), PART 2, TITLE 24 C.C.R.
(2015 INTERNATIONAL BUILDING CODE AND 2013 CALIFORNIA AMENDMENTS)

2016 CALIFORNIA ELECTRICAL CODE (CEC), PART 3, TITLE 24 C.C.R.
(2014 NATIONAL ELECTRICAL CODE AND 2013 CALIFORNIA AMENDMENTS)

2016 CALIFORNIA MECHANICAL CODE (CMC), PART 4, TITLE 24 C.C.R.
(2015 UNIFORM MECHANICAL CODE AND 2013 CALIFORNIA AMENDMENTS)

2016 CALIFORNIA PLUMBING CODE (CPC), PART 5, TITLE 24 C.C.R.
(2015 UNIFORM PLUMBING CODE AND 2013 CALIFORNIA AMENDMENTS)

2016 CALIFORNIA ENERGY CODE, PART 6, TITLE 24 C.C.R. – WHERE APPLICABLE

2016 CALIFORNIA FIRE CODE, PART 9, TITLE 24 C.C.R.
(2015 INTERNATIONAL FIRE CODE AND 2013 CALIFORNIA AMENDMENTS)

2016 CALIFORNIA GREEN BUILDING STANDARDS CODE (CALGREEN), PART 11, TITLE 24 C.C.R. (WHERE APPLICABLE)

2016 CALIFORNIA REFERENCED STANDARDS, PART. 12, TITLE 24 C.C.R.

TITLE 19 C.C.R. PUBLIC SAFETY, STATE FIRE MARSHAL REGULATIONS.

PARTIAL LIST OF APPLICABLE STANDARDS:
NFPA 13, AUTOMATIC SPRINKLER SYSTEMS, 2016 EDITION
NFPA 72, NATIONAL FIRE ALARM CODE (CALIFORNIA AMENDED), 2016 EDITION
NFPA 80, FIRE DOOR AND OTHER OPENING PROTECTIVES, 2016 EDITION
NFPA 2001, CLEAN AGENT FIRE EXTINGUISHING SYSTEMS, 2015 EDITION
REFERENCE CODE SECTION FOR NFPA STANDARDS – 2016 CBC (SFM) CHAPTER 35.
SEE CHAPTER 35 FOR STATE OF CALIFORNIA AMENDMENTS TO NFPA STANDARDS.

OWNER:

Solano Community College District
2000 North Village Parkway
Vacaville, CA 95688

ARCHITECT:

CA ARCHITECTS
475 Gate Five Road, Suite 107
Sausalito, CA 94965
T 415.331.7655
F 415.331.7656

PROJECT:

Vacaville Classroom Building (Annex) Renovation Project

CONSULTANT TEAM:

STAMP

LICENSED ARCHITECT
JOSHUA COHN
C 23410
REN. 11-30-17
STATE OF CALIFORNIA

SHEET LEGEND:

ISSUE/REVISION:

NO:	DATE:	DESCRIPTION:
	04/25/2017	ISSUE FOR DD 100%
	06/06/2017	ISSUE FOR CD 50%
	06/30/2017	ISSUE FOR CD 60%
	07/20/2017	ISSUE FOR CD 100%
	10/18/2017	DSA BACKCHECK

KEY PLAN:

FILE: 48-C1
IDENTIFICATION STAMP
DIVISION OF THE STATE ARCHITECT
02-116082
AC ICC FLS GBC SS PVL
DATE: 10/31/2017

SCALE:
DATE:
PROJECT NO:
PERMIT APPLICATION NO.:

COVER SHEET
INDEX

A0.00

ACCESSIBILITY IMPROVEMENTS
SCC VACAVILLE ANNEX
VACAVILLE, CA
APN 0133-190-520

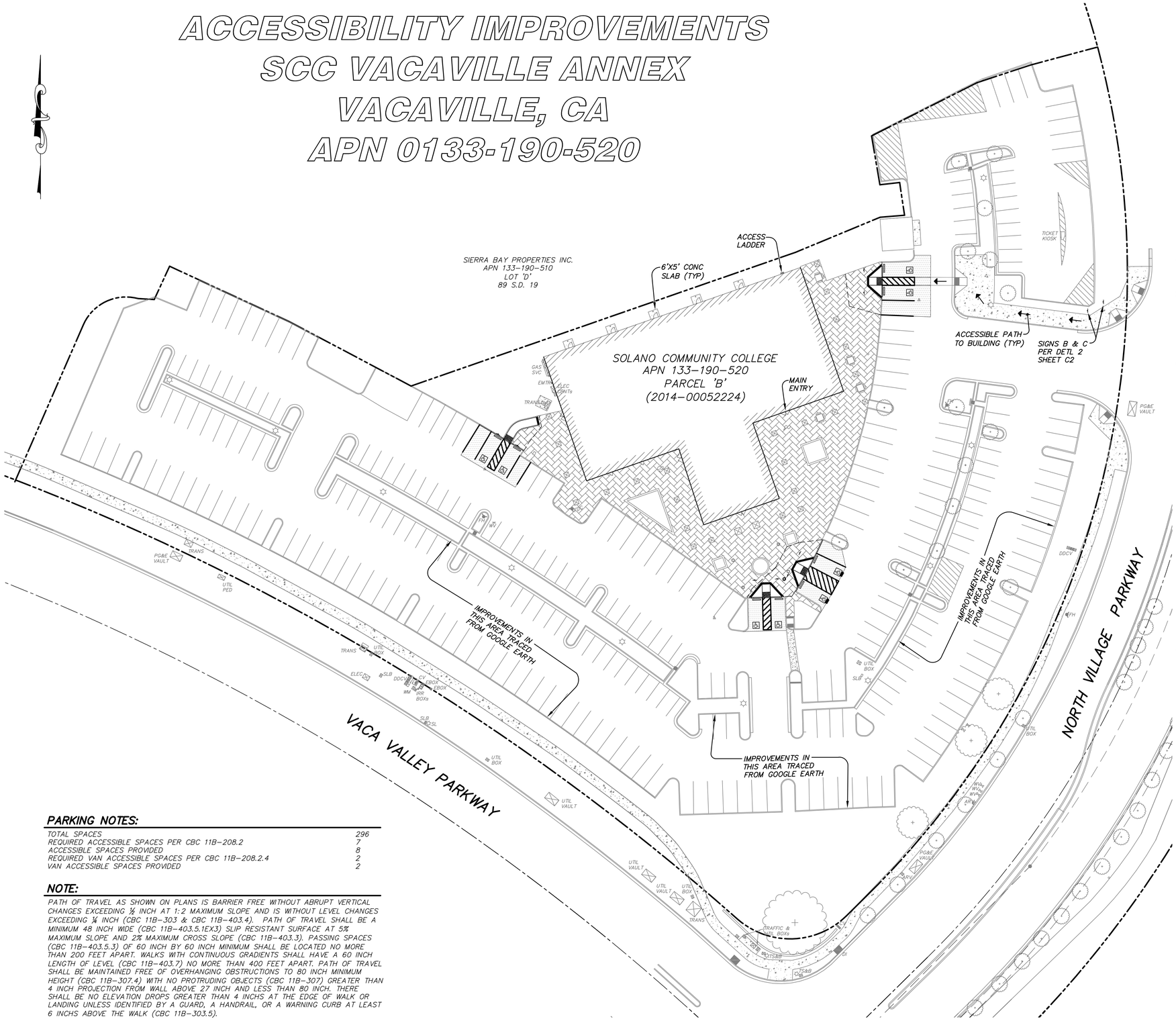

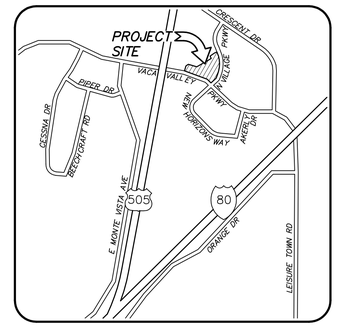

VICINITY MAP

NOT TO SCALE

SHEET INDEX

C1. COVER SHEET/OVERALL SITE PLAN
C2. ACCESSIBLE DETAILS
C3. SITE/ACCESSIBILITY PLAN
C4. DEMOLITION/GRADING DETAILS
C5. PARTIAL TOPOGRAPHIC SURVEY

LEGEND

△	RANDOM CONTROL FOR SURVEY
GB	EXISTING GRADE BREAK
TOP	EXISTING TOP OF SLOPE
TOE	EXISTING TOE OF SLOPE
95 96 97 98 99 100	EXISTING CONTOURS
	EXISTING PROPERTY LINE
	EXISTING ADJACENT PROPERTY LINE
	EASEMENT
	EXISTING WATER VALVE
	EXISTING PAVER PATH
	PROPOSED PAVER PATH
EX8"SS	EXISTING SANITARY SEWER SIZE & SLOPE DIRECTION
EX6"W	EXISTING WATER MAIN SIZE
	EXISTING PEDESTAL LIGHT

ABBREVIATIONS

CB	CATCH BASIN
CBC	LATEST ADDITION OF THE CALIFORNIA BUILDING CODE
CL	CENTERLINE
CV	CHECK VALVE
CONC	CONCRETE
DDCV	DOUBLE DETECTOR CHECK VALVE
DI	DRAINAGE INLET
EBOX	ELECTRIC BOX
ELEC	ELECTRIC
EMTR	ELECTRIC METER
EP	EDGE OF PAVEMENT
EX/EXIST	EXISTING
FDC	FIRE DEPARTMENT CONNECTION
FH	FIRE HYDRANT
FL	FLOWLINE
GB	GRADE BREAK
G/O	GRIND AND OVERLAY
ICV	IRRIGATION CONTROL VALVE
LIP	LIP OF GUTTER
LS	LAND SURVEYOR
MON	STREET MONUMENT
OG	ORIGINAL GROUND
PIV	POST INDICATOR VALVE
PUE	PUBLIC UTILITY EASEMENT
PL	PROPERTY LINE
SCC	SOLANO COMMUNITY COLLEGE
SD	STORM DRAIN
SDE	STORM DRAIN EASEMENT
SL	STREET LIGHT
SLB	STREET LIGHT BOX
SS	SANITARY SEWER
SSCO	SANITARY SEWER CLEANOUT
SSMH	SANITARY SEWER MANHOLE
SVC	SERVICE
SW	SIDEWALK
TFC	TOP FACE OF CURB
TRANS	TRANSFORMER
TS&B	TRAFFIC SIGNAL AND BOX
UEV	UNDERGROUND ELECTRIC VAULT
UTIL	UTILITY
W	WATER
WBOX	WATER BOX
WM	WATER METER
WS	WATER SERVICE
WV	WATER VALVE

PARKING NOTES:

TOTAL SPACES	296
REQUIRED ACCESSIBLE SPACES PER CBC 11B-208.2	7
ACCESSIBLE SPACES PROVIDED	8
REQUIRED VAN ACCESSIBLE SPACES PER CBC 11B-208.2.4	2
VAN ACCESSIBLE SPACES PROVIDED	2

NOTE:

PATH OF TRAVEL AS SHOWN ON PLANS IS BARRIER FREE WITHOUT ABRUPT VERTICAL CHANGES EXCEEDING ½ INCH AT 1:2 MAXIMUM SLOPE AND IS WITHOUT LEVEL CHANGES EXCEEDING ¼ INCH (CBC 11B-303 & CBC 11B-403.4). PATH OF TRAVEL SHALL BE A MINIMUM 48 INCH WIDE (CBC 11B-403.5.1EX3) SLIP RESISTANT SURFACE AT 5% MAXIMUM SLOPE AND 2% MAXIMUM CROSS SLOPE (CBC 11B-403.3). PASSING SPACES (CBC 11B-403.5.3) OF 60 INCH BY 60 INCH MINIMUM SHALL BE LOCATED NO MORE THAN 200 FEET APART. WALKS WITH CONTINUOUS GRADIENTS SHALL HAVE A 60 INCH LENGTH OF LEVEL (CBC 11B-403.7) NO MORE THAN 400 FEET APART. PATH OF TRAVEL SHALL BE MAINTAINED FREE OF OVERHANGING OBSTRUCTIONS TO 80 INCH MINIMUM HEIGHT (CBC 11B-307.4) WITH NO PROTRUDING OBJECTS (CBC 11B-307) GREATER THAN 4 INCH PROJECTION FROM WALL ABOVE 27 INCH AND LESS THAN 80 INCH. THERE SHALL BE NO ELEVATION DROPS GREATER THAN 4 INCHS AT THE EDGE OF WALK OR LANDING UNLESS IDENTIFIED BY A GUARD, A HANDRAIL, OR A WARNING CURB AT LEAST 6 INCHS ABOVE THE WALK (CBC 11B-303.5).

OWNER:

Solano Community College District
2000 North Village Parkway
Vacaville, CA 95688

ARCHITECT:

CA ARCHITECTS
475 Gate Five Road, Suite 107
Sausalito, CA 94965
T 415.331.7655
F 415.331.7656

PROJECT:

Vacaville Classroom Building
(Annex) Renovation Project

CONSULTANT TEAM:

FCE FOULK CIVIL ENGINEERING, INC.
Civil Engineering Land Surveying Planning
4777 Mangels Boulevard, Fairfield, CA 94534
(707)864-0784 fax (707)864-0793 e-mail: foulkce@gmail.com

STAMP

REGISTERED PROFESSIONAL ENGINEER
BRIAN E. FOULK
No. 47287
Exp. 12-31-17
CIVIL
STATE OF CALIFORNIA

SHEET LEGEND:

COVER SHEET /
OVERALL SITE PLAN

ISSUE/REVISION:

NO:	DATE:	DESCRIPTION:
	04/25/2017	ISSUE FOR DD 100%
	06/06/2017	ISSUE FOR CD 50%
	06/30/2017	ISSUE FOR CD 60%
	07/20/2017	ISSUE FOR CD 90%
	07/31/2017	ISSUE FOR CD 100%
	10/18/2017	DSA BACKCHECK

KEY PLAN:

FILE: 48-C1

IDENTIFICATION STAMP
DIVISION OF THE STATE ARCHITECT

02-116082

AC TCC FLS GBC SS PVL

DATE: 10/31/2017

SCALE: 1"=30'
DATE: 10/18/17
PROJECT NO: 17-010
PERMIT APPLICATION NO.:

SHEET NO:

C1

OF 5

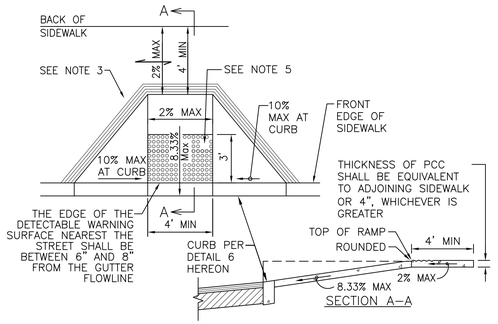

1. RAMPS SHALL HAVE 12" WIDE BORDER OUTSIDE THE SLOPE OF THE RAMP, WITH 1/4" GROOVES, 3/4" ON CENTER. SEE GROOVING DETAIL HEREON.
2. RAMP SIDE SLOPES MAY VARY UNIFORMLY UP TO A MAXIMUM OF 10% AT TOP BACK OF CURB.
3. SURFACE OF RAMP SHALL HAVE A TRAVERSE BROOMED SURFACE CONTRASTING WITH THE SURROUNDING SIDEWALK.
4. COMPACT TOP 6" OF SUBGRADE UNDER RAMP AT MIN 90% RELATIVE COMPACTION. PLACE CL 2 AGGREGATE BASE (AB) ROCK 4 INCHES THICK AND COMPACT TO 95% RELATIVE COMPACTION.
5. ALL RAMPS SHALL HAVE INLINE DETECTABLE WARNING SURFACE THAT EXTENDS THE FULL WIDTH AND 3' MIN DEPTH OF THE RAMP PER CITY STANDARD DRAWING 3–15D.
6. TRANSITIONS FROM RAMPS TO WALKS, GUTTERS OR STREETS SHALL BE FLUSH AND FREE OF ABRUPT CHANGES.
7. PORTLAND CEMENT CONCRETE SHALL CONFORM TO "MINOR CONCRETE" OF THE CALTRANS STANDARD SPECIFICATIONS EXCEPT THAT THE CEMENT CONTENT SHALL BE A MINIMUM OF 6 SACKS OF CEMENT PER CUBIC YARD OF CONCRETE AND MINIMUM THICKNESS SHALL BE 4 INCHES.

1 ACCESSIBLE RAMP DETAIL
NOT TO SCALE

CITY OF VACAVILLE STD. DWG. 3–15A

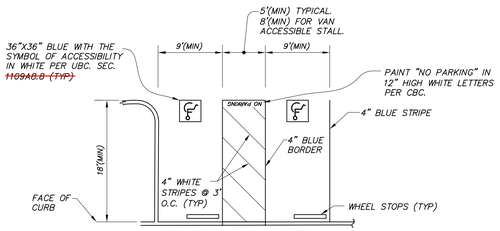

3 ADA ACCESSIBLE PARKING
NOT TO SCALE

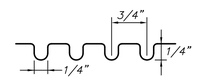

NOTES:
1. RAMPS SHALL HAVE 12" WIDE TACTILE WARNING STRIP PER THIS DETAIL.
2. SURFACE OF RAMP SHALL HAVE A TRANSVERSE BROOMED SURFACE ROUGHER THAN SURROUNDING SIDEWALK.
3. PLACE GROOVES ON LEVEL SURFACE PRIOR TO SLOPE.

4 GROOVING DETAIL
NOT TO SCALE

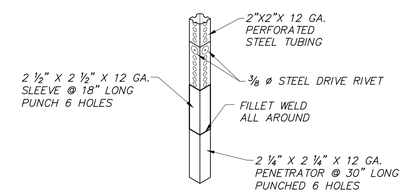

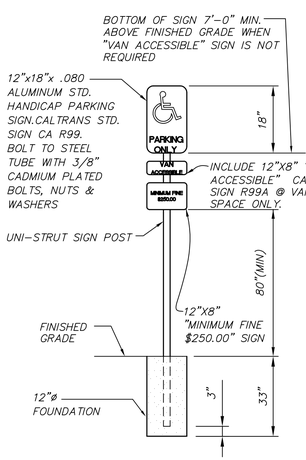

SIGN "A"

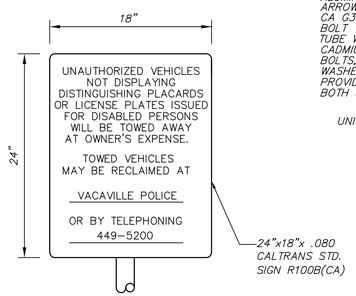

NOTES:
- SIGN TO BE REFLECTIVE MATERIAL ON ALUMINUM OR STEEL WITH BEADED TEXT. BOTTOM OF SIGN TO BE 36" ABOVE FINISHED SURFACE
- SIGN TO HAVE BLACK LETTERS ON WHITE BACKGROUND
- LOCATE AT MAIN DRIVEWAY ENTRIES (PER SITE PLAN)

SIGN "B"

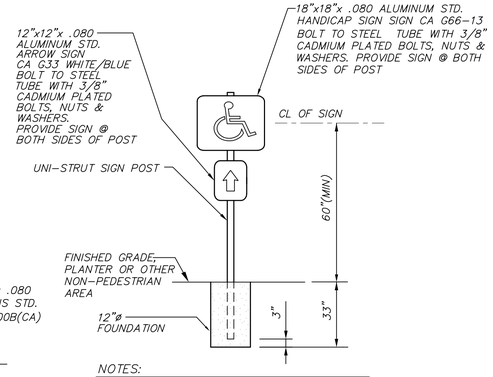

NOTES:
- SIGN TO CONFORM TO CALTRANS STANDARD SIGN
- LOCATE PER SITE PLAN
- SIGN REQUIREMENT IS FOR BACK SIGNS, MOUNTED PERPENDICULARLY TO THE ORIENTATION OF THE PUBLIC SIDEWALK. THE ARROW SHALL BE PARALLEL TO THE GRADE AND POINTING INWARD TOWARDS THE FACILITIES ENTRANCE.

SIGN "C"

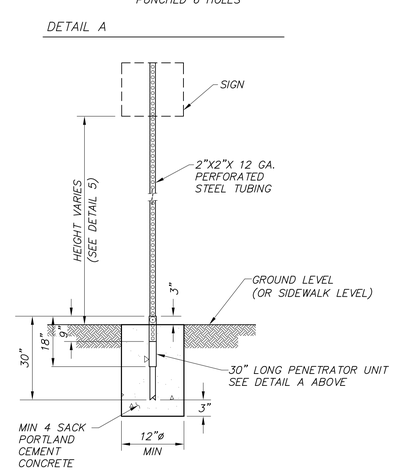

UNI–STRUT SIGN POST

2 HANDICAP PARKING SIGNS
NOT TO SCALE

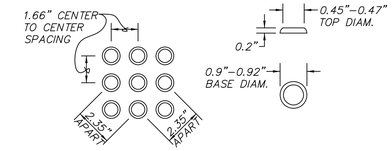

5 DETECTABLE WARNING SURFACE
NOT TO SCALE

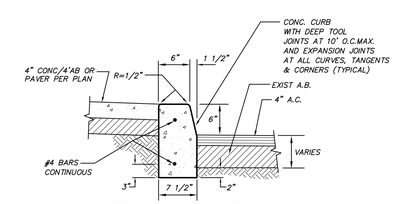

6 ON–SITE CONC CURB
NOT TO SCALE

OWNER:

Solano Community College District
2000 North Village Parkway
Vacaville, CA 95688

ARCHITECT:

CA ARCHITECTS
475 Gate Five Road, Suite 107
Sausalito, CA 94965
T 415.331.7655
F 415.331.7656

PROJECT:

Vacaville Classroom Building (Annex) Renovation Project

CONSULTANT TEAM:

FCE FOULK CIVIL ENGINEERING, INC.
Civil Engineering Land Surveying Planning
4777 Mangels Boulevard, Fairfield, CA 94534
(707)864–0784 fax (707)864–0793 e-mail: foulkce@gmail.com

STAMP

REGISTERED PROFESSIONAL ENGINEER
GREGORY D. FOULK
No. 47287
Exp. 12–31–17
CIVIL
STATE OF CALIFORNIA

SHEET LEGEND:

ACCESSIBLE DETAILS

ISSUE/REVISION:

NO:	DATE:	DESCRIPTION:
	04/25/2017	ISSUE FOR DD 100%
	06/06/2017	ISSUE FOR CD 50%
	06/30/2017	ISSUE FOR CD 60%
	07/20/2017	ISSUE FOR CD 90%
	07/31/2017	ISSUE FOR CD 100%
	10/18/2017	DSA BACKCHECK

KEY PLAN:

FILE: 48-C1
IDENTIFICATION STAMP
DIVISION OF THE STATE ARCHITECT
02-116082
AC ICC FLS GBC SS PVL
DATE: 10/31/2017

SCALE:
DATE: 10/18/17
PROJECT NO: 17-010
PERMIT APPLICATION NO.:

SHEET NO:
C2
OF 5

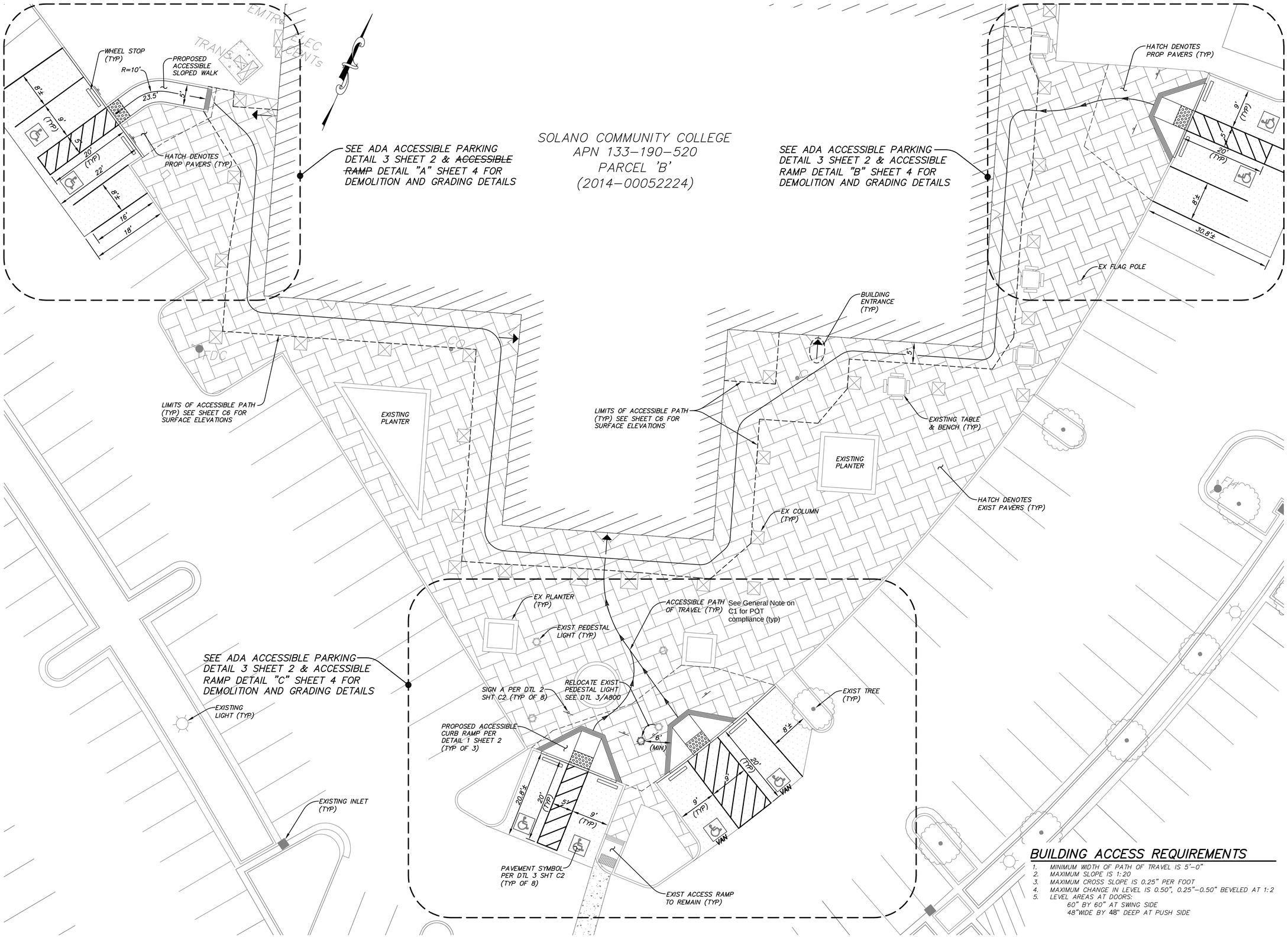

BUILDING ACCESS REQUIREMENTS

1. MINIMUM WIDTH OF PATH OF TRAVEL IS 5'-0"
2. MAXIMUM SLOPE IS 1:20
3. MAXIMUM CROSS SLOPE IS 0.25" PER FOOT
4. MAXIMUM CHANGE IN LEVEL IS 0.50", 0.25"-0.50" BEVELED AT 1:2
5. LEVEL AREAS AT DOORS:
   60" BY 60" AT SWING SIDE
   48"WIDE BY 48" DEEP AT PUSH SIDE

OWNER:

Solano Community College District
2000 North Village Parkway
Vacaville, CA 95688

ARCHITECT:

CA ARCHITECTS
475 Gate Five Road, Suite 107
Sausalito, CA 94965
T 415.331.7655
F 415.331.7656

PROJECT:

Vacaville Classroom Building (Annex) Renovation Project

CONSULTANT TEAM:

FCE FOULK CIVIL ENGINEERING, INC.
Civil Engineering Land Surveying Planning
4777 Mangels Boulevard, Fairfield, CA 94534
(707)864-0784 fax (707)864-0793 e-mail: foulkce@gmail.com

STAMP

REGISTERED PROFESSIONAL ENGINEER
BRIAN L. FOULK
No. 47287
Exp. 12-31-17
CIVIL
STATE OF CALIFORNIA

SHEET LEGEND:

SITE/ACCESSIBILITY PLAN

ISSUE/REVISION:

NO:	DATE:	DESCRIPTION:
	04/25/2017	ISSUE FOR DD 100%
	06/06/2017	ISSUE FOR CD 50%
	06/30/2017	ISSUE FOR CD 60%
	07/20/2017	ISSUE FOR CD 90%
	07/31/2017	ISSUE FOR CD 100%
	10/18/2017	DSA BACKCHECK

KEY PLAN:

FILE: 48-C1

IDENTIFICATION STAMP
DIVISION OF THE STATE ARCHITECT

02-116082

AC TCC FLS GBC ss PVL

DATE: 10/31/2017

SCALE: 1"=10'
DATE: 10/18/17
PROJECT NO: 17-010
PERMIT APPLICATION NO.:

SHEET NO:

C3

OF 5

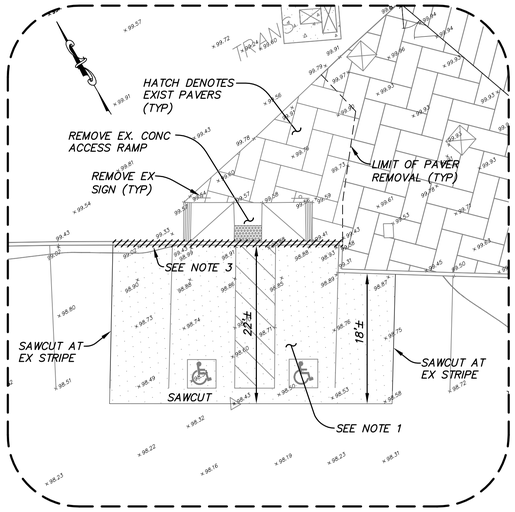

DEMOLITION PLAN

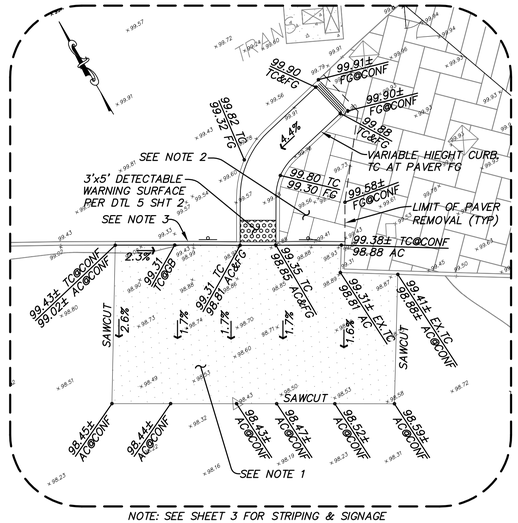

NOTE: SEE SHEET 3 FOR STRIPING & SIGNAGE

GRADING PLAN

ACCESSIBLE RAMP DETAIL "A"

SCALE: 1"=10'

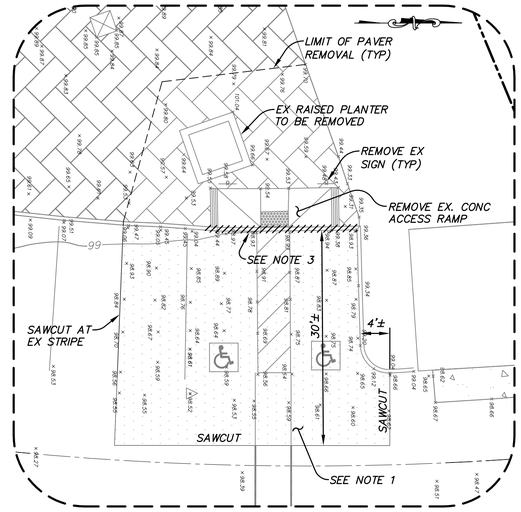

DEMOLITION PLAN

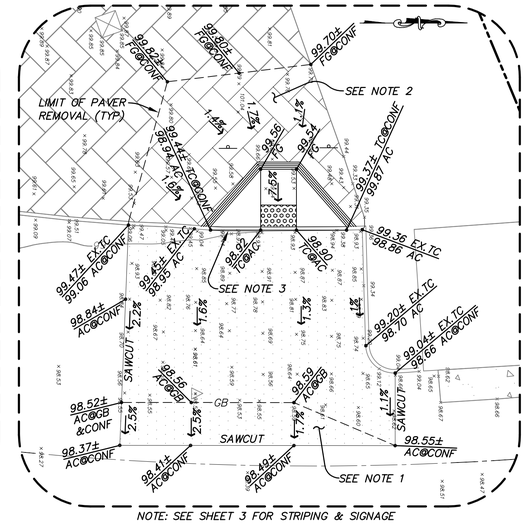

NOTE: SEE SHEET 3 FOR STRIPING & SIGNAGE

GRADING PLAN

ACCESSIBLE RAMP DETAIL "B"

SCALE: 1"=10'

NOTES:

1. REMOVE EXISTING AC PAVING TO SAWCUT LINE NOTED. RE-GRADE AND COMPACT BASE ROCK TO 4 INCHES BELOW DESIGN PAVEMENT GRADE. PLACE 4 INCHES HOT MIX ASPHALT IN TWO 2 INCH LIFTS PER SPECIFICATIONS.
2. REPLACE AND/OR RE-USE UNDAMAGED PAVERS TO MATCH EXISTING MANUFACTURES RECOMMENDATIONS. CONTRACTOR TO CUT PAVERS AS REQUIERED AT CONFORM LOCATIONS TO NEW CONCRETE WORK RESULTING IN PROFESSIONAL APPEARANCE.
3. REMOVE EXISTING CONCRETE CURB AND REPLACE WITH CURB PER DETAIL 6 SHEET C2. Side flare shall be 10% max at all ramps (typ)

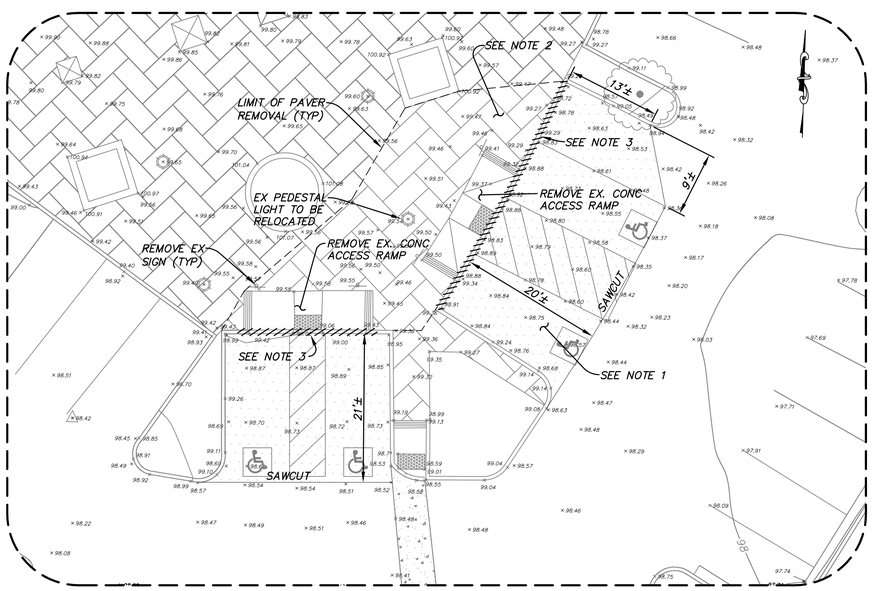

DEMOLITION PLAN

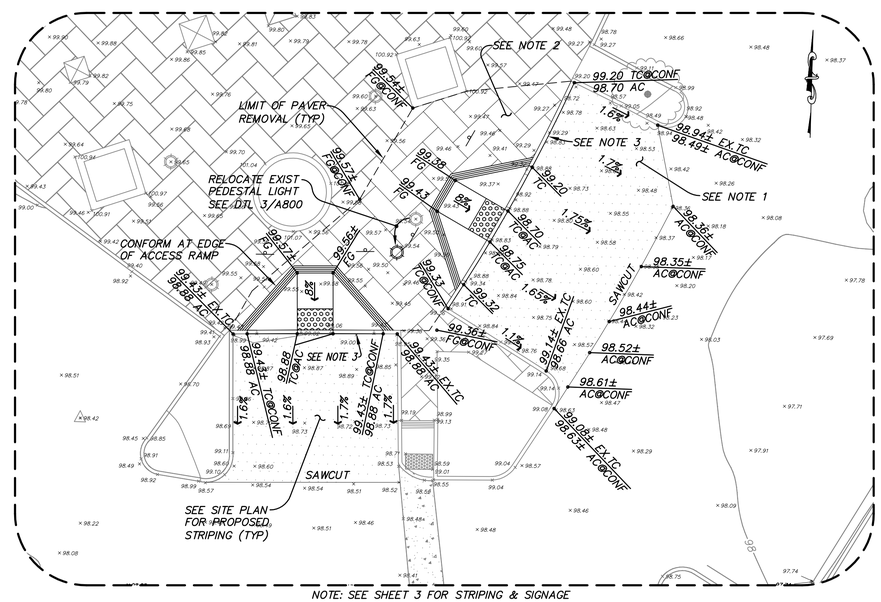

NOTE: SEE SHEET 3 FOR STRIPING & SIGNAGE

GRADING PLAN

ACCESSIBLE RAMP DETAIL "C"

SCALE: 1"=10'

OWNER:

Solano Community College District
2000 North Village Parkway
Vacaville, CA 95688

ARCHITECT:

CA ARCHITECTS
475 Gate Five Road, Suite 107
Sausalito, CA 94965
T 415.331.7655
F 415.331.7656

PROJECT:

Vacaville Classroom Building (Annex) Renovation Project

CONSULTANT TEAM:

FCE FOULK CIVIL ENGINEERING, INC.
Civil Engineering Land Surveying Planning
4977 Mangels Boulevard, Fairfield, CA 94534
(707)864-0784 fax (707)864-0793 e-mail: foulkce@gmail.com

STAMP

REGISTERED PROFESSIONAL ENGINEER
GREGORY D. FOULK
No. 47287
Exp. 12-31-17
CIVIL
STATE OF CALIFORNIA

SHEET LEGEND:

DEMOLITION / GRADING DETAILS

ISSUE/REVISION:

NO:	DATE:	DESCRIPTION:
	04/25/2017	ISSUE FOR DD 100%
	06/06/2017	ISSUE FOR CD 50%
	06/30/2017	ISSUE FOR CD 60%
	07/20/2017	ISSUE FOR CD 90%
	07/31/2017	ISSUE FOR CD 100%
	10/18/2017	DSA BACKCHECK

KEY PLAN:

FILE: 48-C1
IDENTIFICATION STAMP
DIVISION OF THE STATE ARCHITECT
02-116082
AC TCC FLS GBC SSPVL
DATE: 10/31/2017

SCALE: 1"=10'
DATE: 10/18/17
PROJECT NO: 17-010
PERMIT APPLICATION NO.:

SHEET NO:

C4

OF 5

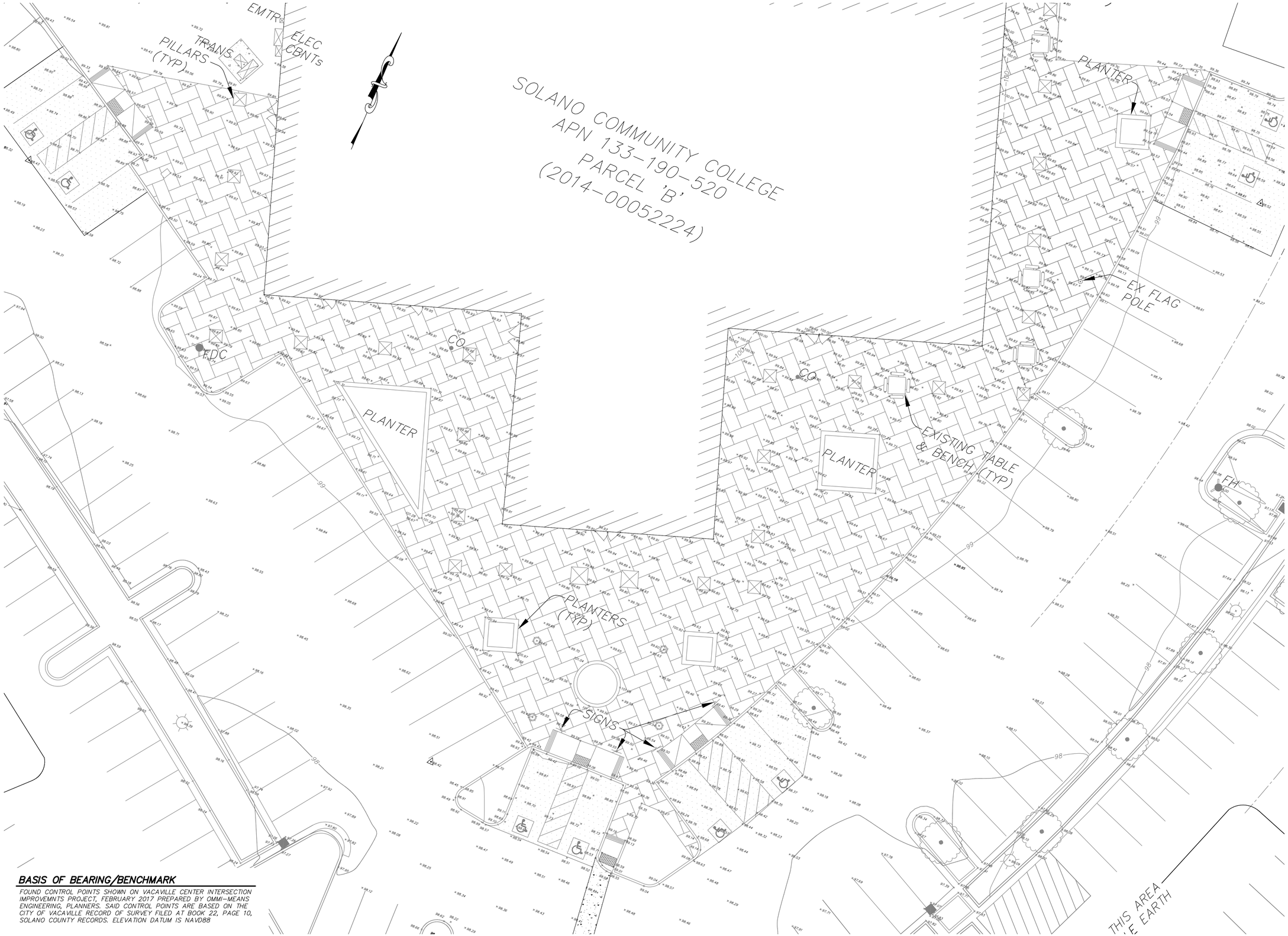

BASIS OF BEARING/BENCHMARK

FOUND CONTROL POINTS SHOWN ON VACAVILLE CENTER INTERSECTION IMPROVEMNTS PROJECT, FEBRUARY 2017 PREPARED BY OMMI-MEANS ENGINEERING, PLANNERS. SAID CONTROL POINTS ARE BASED ON THE CITY OF VACAVILLE RECORD OF SURVEY FILED AT BOOK 22, PAGE 10, SOLANO COUNTY RECORDS. ELEVATION DATUM IS NAVD88

OWNER:

Solano Community College District
2000 North Village Parkway
Vacaville, CA 95688

ARCHITECT:

CA ARCHITECTS
475 Gate Five Road, Suite 107
Sausalito, CA 94965
T 415.331.7655
F 415.331.7656

PROJECT:

Vacaville Classroom Building
(Annex) Renovation Project

CONSULTANT TEAM:

FCE FOULK CIVIL ENGINEERING, INC.
Civil Engineering Land Surveying Planning
4777 Mangels Boulevard, Fairfield, CA 94534
(707)864-0784 fax (707)864-0793 e-mail: foulkce@gmail.com

STAMP

REGISTERED PROFESSIONAL ENGINEER
No. 47287
Exp. 12-31-17
CIVIL
STATE OF CALIFORNIA

SHEET LEGEND:

PARTIAL
TOPOGRAPHIC SURVEY

ISSUE/REVISION:

NO:	DATE:	DESCRIPTION:
	04/25/2017	ISSUE FOR DD 100%
	06/06/2017	ISSUE FOR CD 50%
	06/30/2017	ISSUE FOR CD 60%
	07/20/2017	ISSUE FOR CD 90%
	07/31/2017	ISSUE FOR CD 100%
	10/18/2017	DSA BACKCHECK

KEY PLAN:

FILE: 48-C1

IDENTIFICATION STAMP
DIVISION OF THE STATE ARCHITECT

02-116082

AC TCC FLS GBC SS PVL

DATE: 10/31/2017

SCALE: 1"=10'
DATE: 10/18/17
PROJECT NO: 17-010
PERMIT APPLICATION NO.:

SHEET NO:

C5

OF 5

Fire Flow Analysis for 200 N. Village Parkway, Annex Building:

1. Water Information from Vacaville Utilities Dept. on October 19, 2016:

a)	Static Pressure:	S= 91 PSI
b)	Residual Pressure:	R1= 74 PSI
c)	Flow:	Q1= 4,500 GPM
d)	Residual Pressure required for fire flow:	R2= 20 PSI

2. **Q = Calculated Available Fire Flow at R2=20 PSI:**

   Q = Q1(S-R2) ^.54/(S-R1) ^.54
   Q = 4,500(91-20) ^.54/ (91-74) ^.54
   Q = 4,500(71^.54)/ (17^.54)
   Q = 4,500(9.99)/4.62
   Q = 44,955/4.62

   Q = 9,730 GPM

3. Fire Flow required by 2016 CFC Appendix B Table B105.1 and SFFD:

   Type IIIB, 16,440 sq.ft. = 2750 GPM – 75% reduction for a sprinklered building based on exception 1 of section BB105.1, but no less than 1500 GPM = 1500 GPM

4. Required Fire Flow of **1500** GPM is less than the available **9,730** GPM.

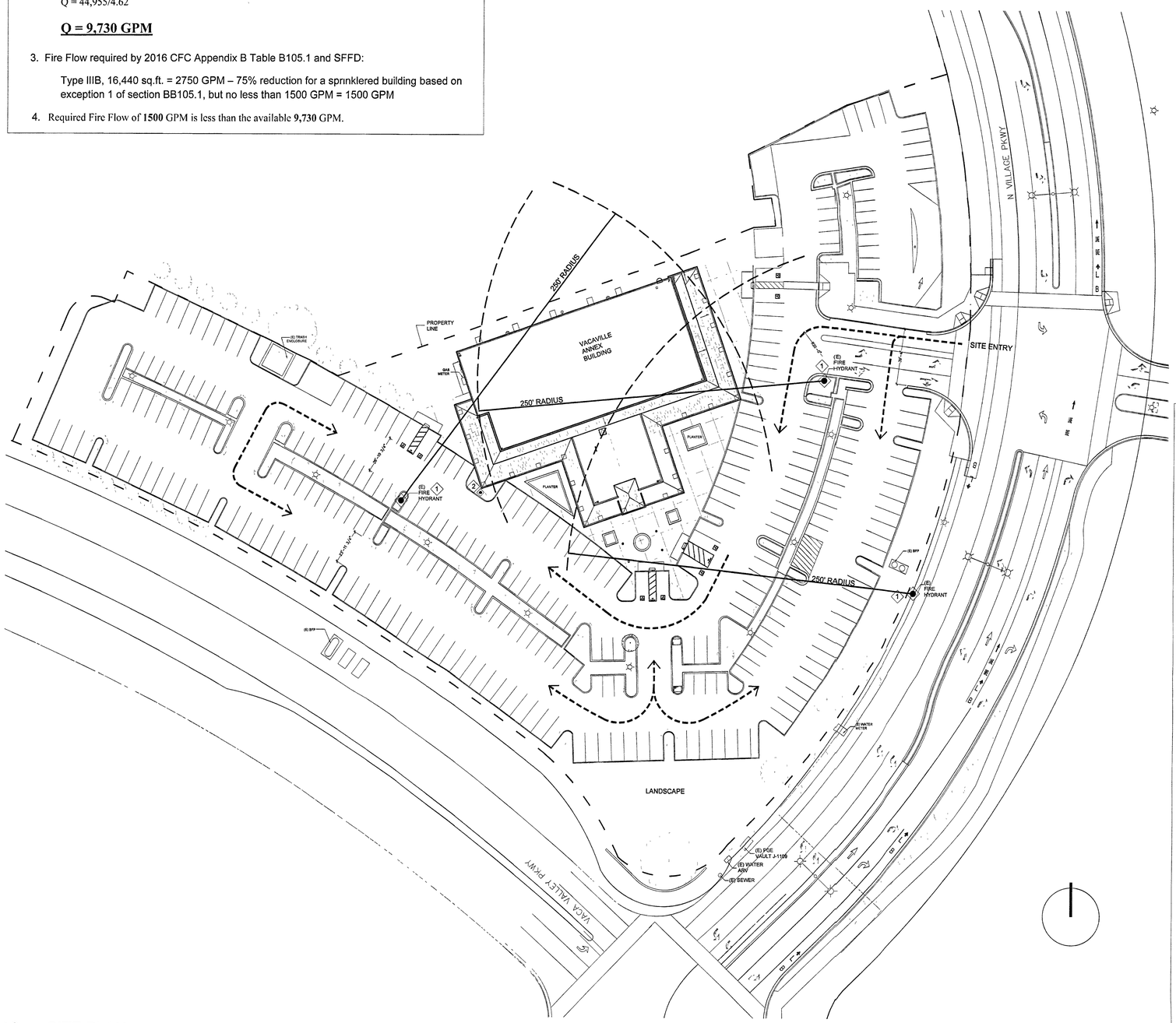

10 SITE PLAN

SCALE: 1/40" = 1' - 0"

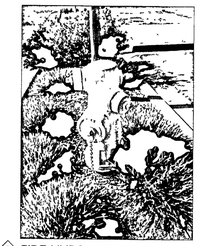

1 FIRE HYDRANT

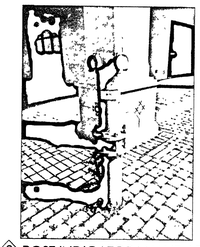

2 POST INDICATOR VALVE / FD CONNECTION

GENERAL NOTE:
SEE FP-1 FOR WATER FLOW INFORMATION

SHEET NOTES:

1. FIRE HYDRANT LOCATION
2. POST INDICATOR VALVE / FD CONNECTION (SEE FP FOR DETAILS)

BUILDING DATA		FIRE ACCESS LEDGED
BUILDING TYPE:	V-B FULLY SPRINKLED	FIRE HYDRANT
BUILDING AREA:	16,400 SF 1-STORY	FIRE LANE ACCESS

DSA 810

LOCAL FIRE AUTHORITY REVIEW

To facilitate the Division of the State Architect's (DSA) approval of the Fire/Life Safety portion of a project, DSA requires Local Fire Authority (LFA) review of certain elements as identified in this form. Use of this form is mandatory for projects that add square footage to a campus or if any item on this form is relevant to the project. For additional information, see DSA 810 Instructions and DSA Policy 09-01.

PROJECT INFORMATION

School District/Owner:	Solano Community College District
Project Name/School:	Vacaville Classroom Building (Annex) Renovation Project
Project Address:	200 North Village Parkway Vacaville, CA 95688

LOCAL FIRE AUTHORITY (LFA)

LFA Agency Name: Vacaville Fire Dept
LFA Reviewer Name: Scott Wilson — Title: Fire Plans Examiner
Email: Scott.Wilson@City of Vacaville.ca — Telephone Number: 707.449.5465

I have reviewed and responded to the applicable items for this project as listed below.
Note: *Only sign this form when it is imposed onto the site plan A loose form is not acceptable to DSA*

LFA Reviewer's Signature: _____ **Date:** 7/31/17

Review Key: **"Y"** = Complies with LFA requirements; **"N"** = Not approved (complete Section 8); **"NA"** = Not applicable to the project; **"NR"** = LFA elects not to review

	Description	Y	N	NA	NR
1	Where an elevator does not meet medical emergency service cab size, per the California Building Code (CBC), use of stairways for emergency rescue and patient transport is acceptable.			X	
2	Access roads, fire lane markings, pavers and gate entrances are in accordance with Title 19, California Code of Regulations and the California Fire Code, Chapter 5	X			
3	Fire hydrant location and distribution complies with the California Fire Code (or see # 4).	X			
4	Fire hydrant location and distribution complies with NFPA 1142, "Alternate Means." If "NR" is checked, DSA can only approve on-site water storage as an alternate. The signature of the school district official is required to acknowledge the use of alternate means			X	
	Signature of School District Official: _____ **Date:** _____ **Print the School District Official's Name:** _____				
5	The location(s) of the proposed post indicator valve and fire department connection meet the requirements of this jurisdiction	X			
6	The location(s) of the detector check valve assembly meet the requirements of this jurisdiction	X			
7	Is the project located in a hazard severity zone area? (CBC, Chapter 7A, Section 701A) ☐ Yes ☒ No Check type if "Yes" ☐ Moderate ☐ High ☐ Very High ☐ WIFA (If one of these boxes is checked, the project design must meet the requirements of Chapter 7A.)				
8	COMMENTS (note deficiencies): Fire Water by CVA Meet City Stds.				

DSA 810 (rev 05-12-14) DIVISION OF THE STATE ARCHITECT — DEPARTMENT OF GENERAL SERVICES — Page 1 of 1 STATE OF CALIFORNIA

01 LOCAL FIRE AUTHORITY REVIEW FORM

OWNER:

Solano Community College District
2000 North Village Parkway
Vacaville, CA 95688

ARCHITECT

CA ARCHITECTS
475 Gate Five Road, Suite 107
Sausalito, CA 94965
T 415.331.7655
F 415.331.7656

PROJECT

Vacaville Classroom Building (Annex) Renovation Project

CONSULTANT TEAM

STAMP

LICENSED ARCHITECT — JOSEPH A. COHN — C-13410 — 11-30-2017 — STATE OF CALIFORNIA

SHEET LEGEND

ISSUE/REVISION:

NO:	DATE:	DESCRIPTION:
	04/25/2017	ISSUE FOR DD 100%
	06/06/2017	ISSUE FOR CD 50%
	06/30/2017	ISSUE FOR CD 60%
	07/20/2017	ISSUE FOR CD 100%

KEY PLAN:

FILE: 48-C1

IDENTIFICATION STAMP
DIVISION OF THE STATE ARCHITECT
02-116082
AC JCC FLS GBC SS PVL
DATE: 10/31/2017

SCALE:
DATE:
PROJECT NO.
PERMIT APPLICATION NO.:

SITE PLAN - LFA

A0.01

SHEET NOTES:

1. ACCESSIBLE STALLS WITH LEVEL LOADING
2. ACCESSIBLE PATH OF TRAVEL SEE CIVIL DRAWINGS, SEE C.1 FOR SITE DEVELOPMENT REQUIREMENTS
3. SEE AS1.00 SITE PLAN FOR PARKING STALL RATIOS
4. LISTENING DEVICE

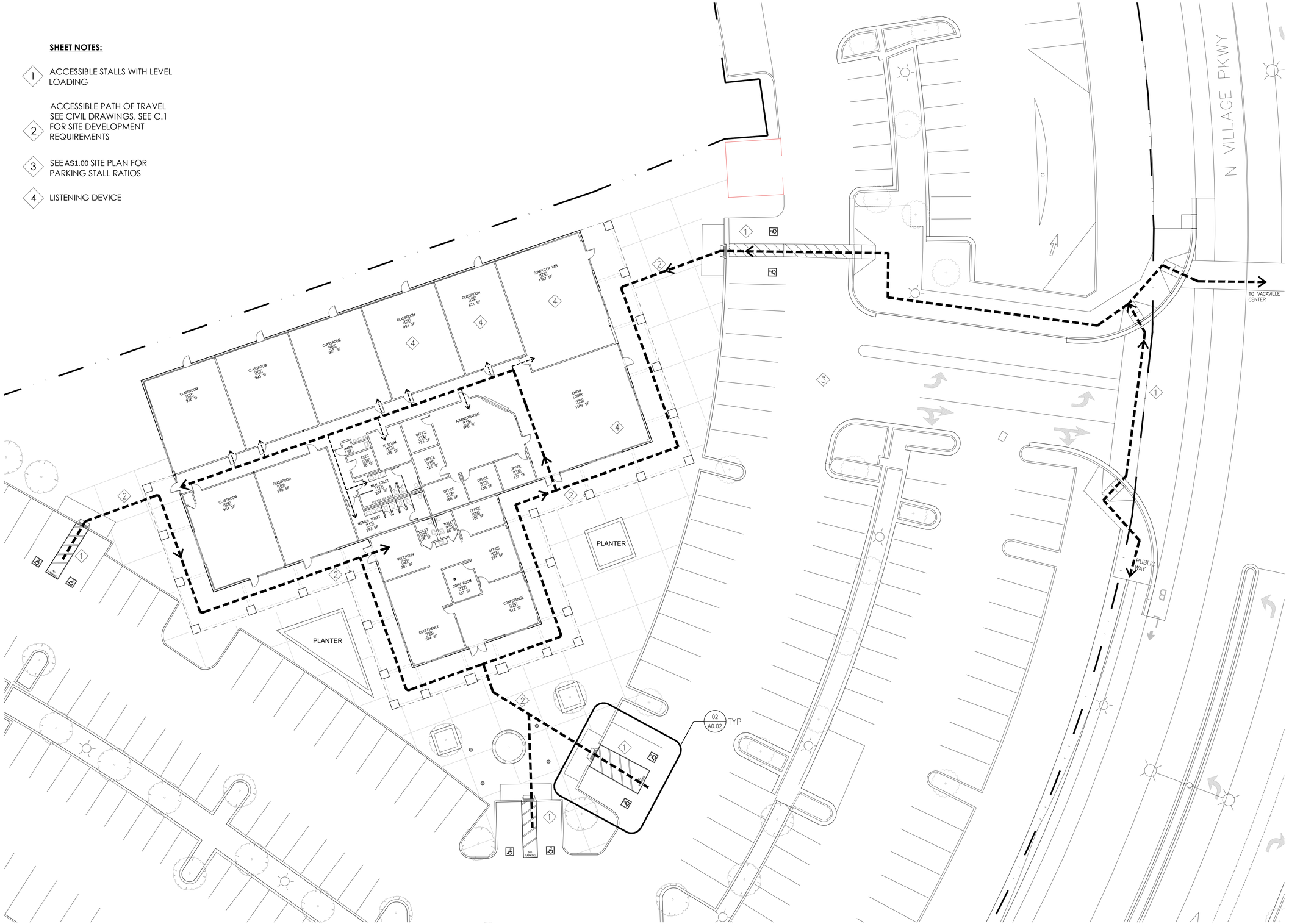

10 BUILDING PLAN - ACCESS

SCALE: 1/16" = 1' - 0"

OWNER:

Solano Community College District
2000 North Village Parkway
Vacaville, CA 95688

ARCHITECT:

CA ARCHITECTS
475 Gate Five Road, Suite 107
Sausalito, CA 94965
T 415.331.7655
F 415.331.7656

PROJECT:

Vacaville Classroom Building (Annex) Renovation Project

CONSULTANT TEAM:

STAMP

LICENSED ARCHITECT
JOSHUA COHN
C 23410
REN. 11-30-17
STATE OF CALIFORNIA

SHEET LEGEND:

ISSUE/REVISION:

NO:	DATE:	DESCRIPTION:
	04/25/2017	ISSUE FOR DD 100%
	06/06/2017	ISSUE FOR CD 50%
	06/30/2017	ISSUE FOR CD 60%
	07/20/2017	ISSUE FOR CD 100%
	10/18/2017	DSA BACKCHECK

KEY PLAN:

FILE: 48-C1
IDENTIFICATION STAMP
DIVISION OF THE STATE ARCHITECT
02-116082
AC ICC FLS GBC SS PVL
DATE: 10/31/2017

SCALE:
DATE:
PROJECT NO:
PERMIT APPLICATION NO.:

ACCESS PLAN

A0.10

1. PROVIDE & INSTALL SIGNAGE & IDENTIFICATION DEVICES IN ACCORDANCE WITH 2016 CBC 11B SECTIONS 703 & 216.
2. PROVIDE & INSTALL TACTILE EXIT SIGNS IN ACCORDANCE WITH 2016 CBC SECTIONS 703 & 216
3. REFER TO SPEC. SECTION 101400 "SIGNS" FOR GENERAL SIGNAGE SCOPE.

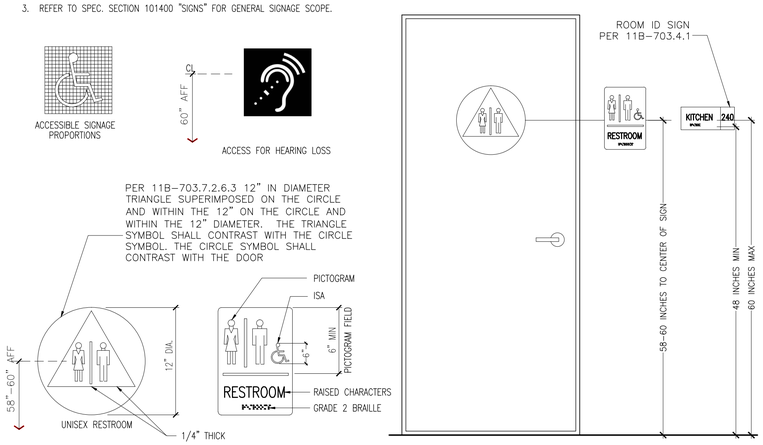

12 SIGN LOCATION AND INSTALLATION

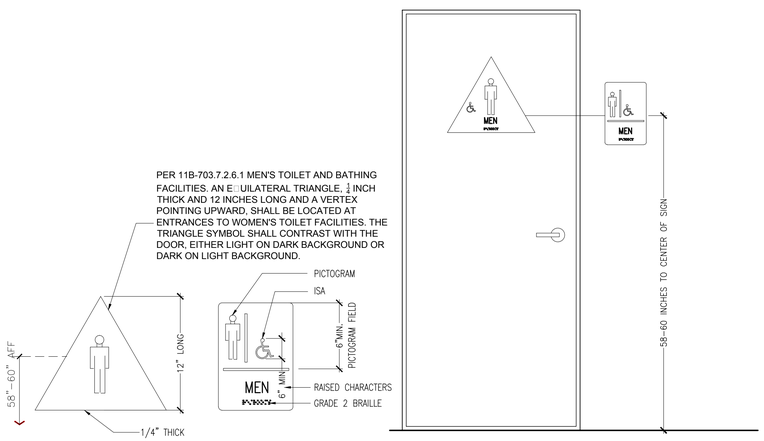

11 SIGN LOCATION AND INSTALLATION - MEN'S TOILET ROOM

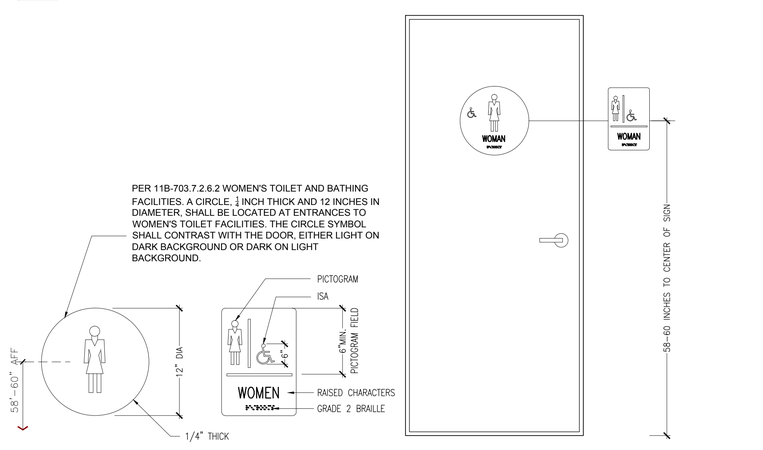

10 SIGN LOCATION AND INSTALLATION - WOMEN'S TOILET ROOM

NOTE: DIMENSIONS SHOWN DESCRIBE MINIMUM REQUIREMENTS ONLY. REFER TO CONSTRUCTION DOCUMENTS FOR SIZE & LOCATIONS OF SPECIFIC FIXTURES & ACCESSORIES.

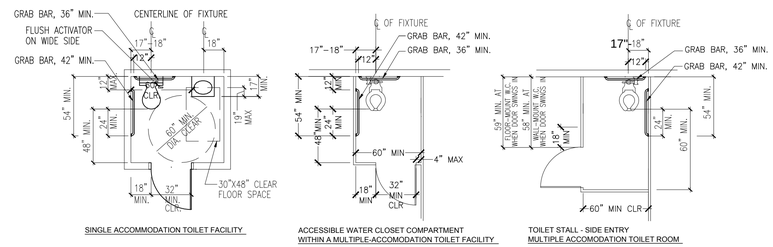

09 BATHROOM CLEARANCES

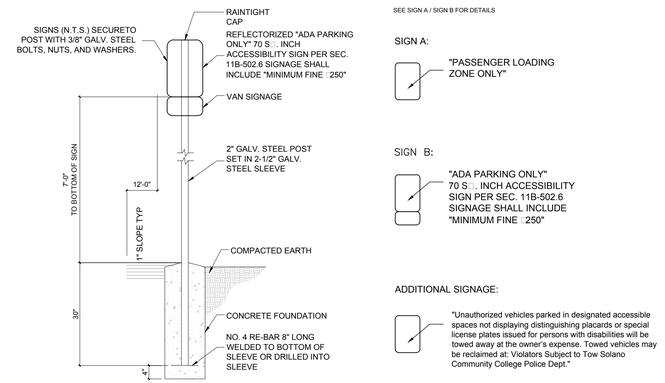

08 ACCESSIBLE SIGNAGE @ PARKING

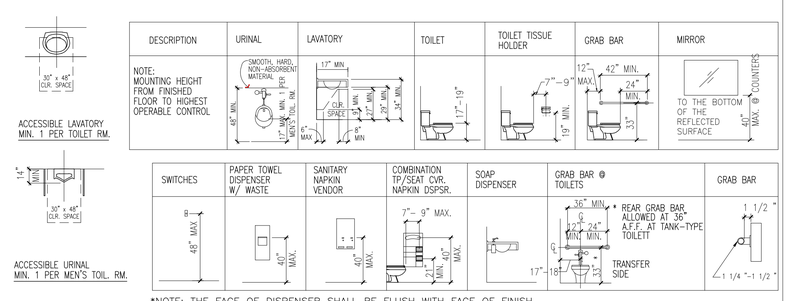

*NOTE: THE FACE OF DISPENSER SHALL BE FLUSH WITH FACE OF FINISH

07 TABLE A - ADULT DIM

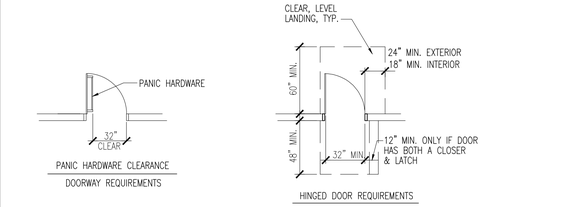

NOTE: PER 11B–404.2.9
MAXIMUM EFFORT TO OPERATE DOORS SHALL NOT EXCEED 5 LBS.
FOR EXTERIOR DOORS, 5 LBS. FOR INTERIOR DOORS AND 15 LBS. (OR AS ALLOWED BY APPROPRIATE ADMINISTRATIVE AGENCY) FOR FIRE DOORS

05 DOORWAY REQUIREMENTS

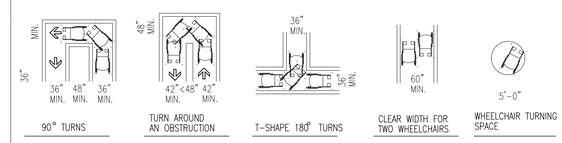

04 WHEELCHAIR TURNING REQUIREMENTS IN AN ACCESSIBLE ROUTE

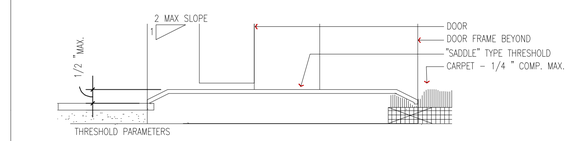

03 THRESHOLD REQUIREMENT @ENTRY (TYP)

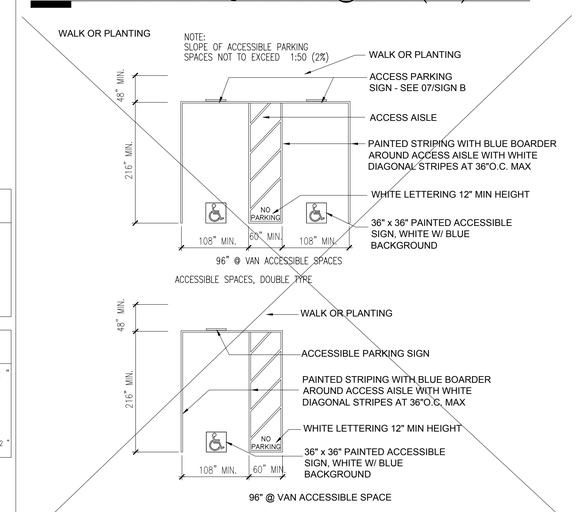

02 ACCESSIBLE PARKING SPACE

WHERE INDICATED:

INSTALL NEW DETECTABLE WARNINGS AT EXISTING CURB RAMP AND SHALL EXTEND THE FULL WIDTH OF THE RAMP PER 11B-705.1.2.2. ONLT APPROVED DSA-AC DETECTABLE WARNING PRODUCTS SHALL BE INSTALLED PER 11B-705.1.1.1 AND 11B-705.1.1.2

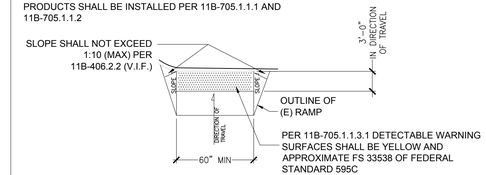

01 ACCESSIBLE CURB CUT - VIF

OWNER:

Solano Community College District
2000 North Village Parkway
Vacaville, CA 95688

ARCHITECT:

CA ARCHITECTS
475 Gate Five Road, Suite 107
Sausalito, CA 94965
T 415.331.7655
F 415.331.7656

PROJECT:

Vacaville Classroom Building (Annex) Renovation Project

CONSULTANT TEAM:

STAMP

LICENSED ARCHITECT JOSHUA COHN C 23410 REN. 11-30-17 STATE OF CALIFORNIA

SHEET LEGEND:

ISSUE/REVISION:

NO:	DATE:	DESCRIPTION:
	04/25/2017	ISSUE FOR DD 100%
	06/06/2017	ISSUE FOR CD 50%
	06/30/2017	ISSUE FOR CD 60%
	07/20/2017	ISSUE FOR CD 100%
	10/18/2017	DSA BACKCHECK

KEY PLAN:

FILE: 48-C1
IDENTIFICATION STAMP
DIVISION OF THE STATE ARCHITECT
02-116082
AC TCC FLS GBC SSPVL
DATE: 10/31/2017

SCALE:
DATE:
PROJECT NO:
PERMIT APPLICATION NO.:

ADA - ACCESS

A0.20

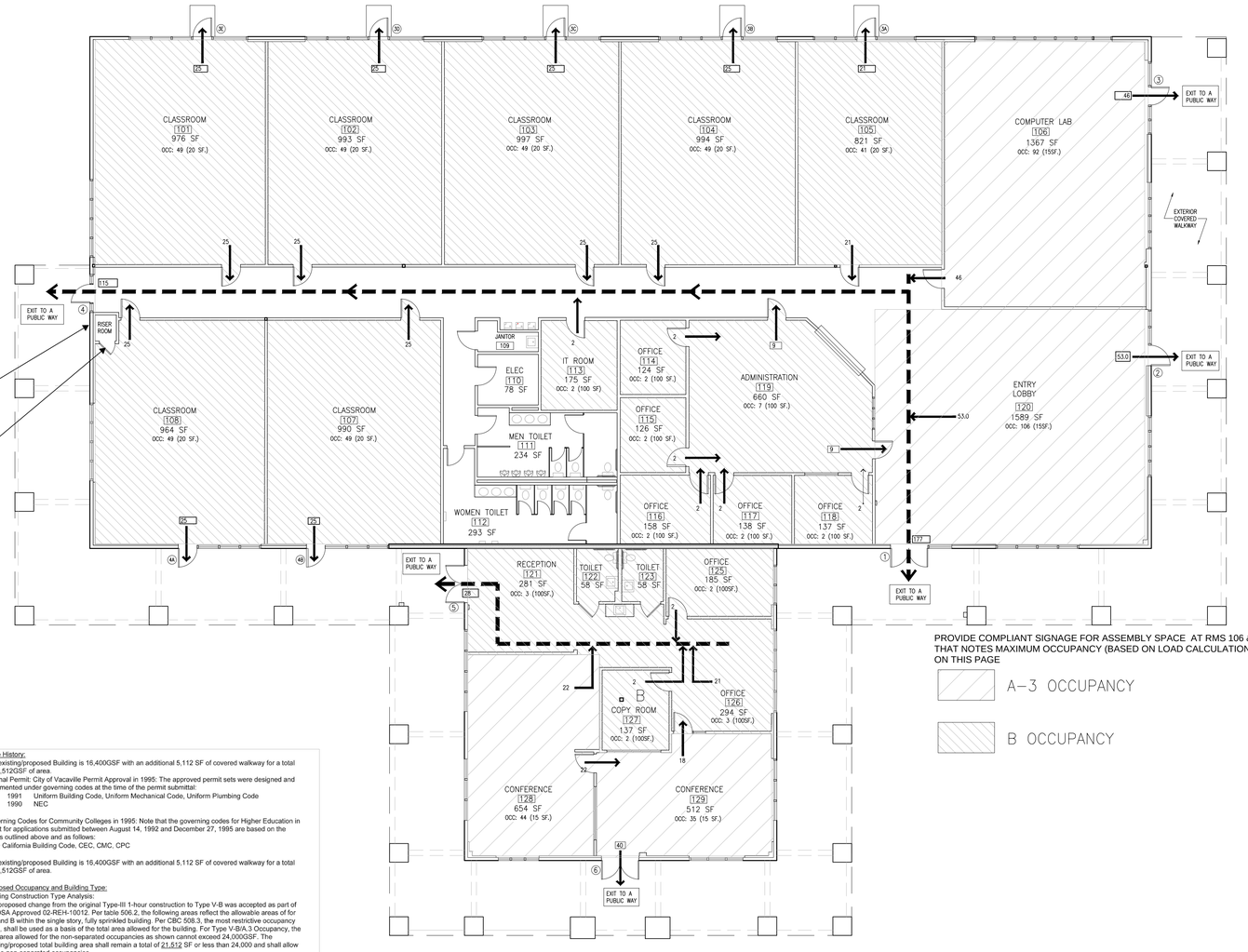

RISER ROOM SIGNAGE:

1. PROVIDE EXTERIOR SIGN INDICATING "RISER ROOM IN ROOM 108"

2. PROVIDE INTERIOR SIGN IN ROOM 108 NEAR RISER ROOM DOOR INDICATING "RISER ROOM"

PROVIDE COMPLIANT SIGNAGE FOR ASSEMBLY SPACE AT RMS 106 &120 THAT NOTES MAXIMUM OCCUPANCY (BASED ON LOAD CALCULATIONS ON THIS PAGE

A-3 OCCUPANCY

B OCCUPANCY

Code History:
The existing/proposed Building is 16,400GSF with an additional 5,112 SF of covered walkway for a total of 21,512GSF of area.
Original Permit: City of Vacaville Permit Approval in 1995: The approved permit sets were designed and documented under governing codes at the time of the permit submittal:
1991 Uniform Building Code, Uniform Mechanical Code, Uniform Plumbing Code
1990 NEC

Governing Codes for Community Colleges in 1995: Note that the governing codes for Higher Education in effect for applications submitted between August 14, 1992 and December 27, 1995 are based on the codes outlined above and as follows:
1990 California Building Code, CEC, CMC, CPC

The existing/proposed Building is 16,400GSF with an additional 5,112 SF of covered walkway for a total of 21,512GSF of area.

Proposed Occupancy and Building Type:
Building Construction Type Analysis:
The proposed change from the original Type-III 1-hour construction to Type V-B was accepted as part of the DSA Approved 02-REH-10012. Per table 506.2, the following areas reflect the allowable areas of for A-3 and B within the single story, fully sprinkled building. Per CBC 508.3, the most restrictive occupancy (A-3), shall be used as a basis of the total area allowed for the building. For Type V-B/A-3 Occupancy, the total area allowed for the non-separated occupancies as shown cannot exceed 24,000GSF. The existing/proposed total building area shall remain a total of 21,512 SF or less than 24,000 and shall allow for the non-separated occupancies

2016: Allowable Areas per Table 506.2 for Type V-B Construction per S1 (one-story with sprinkler system)

Occupancy	Type of Construction III 1-Hour	V I-hour(V-A)	V-N (V-B)
A.3 OCCUPANCY	56,000	46,000	**24,000**
B OCCUPANCY	114,000	72,000	36,000

No occupancy area separation between A-3/B is required per Table 508.3 CBC 2016

10 EGRESS PLAN

SCALE: 3/32" = 1' - 0"

GENERAL NOTE:

1. PER TABLE 803.11CBC 2016, INTERIOR FINISHES FOR WALL AND CEILING, IN ROOMS AND ENCLOSED SPACES SHALL BE CLASS "C" OR BETTER AND CLASS "B" IN CORRIDORS AND EXIT ENCLOSURES IN FULLY SPRINKLED SPACES. CRITERIA FOR FLAME SPREAD INDEX SHALL COMPLY WITH SEC 803 AND TABLE 803.9 (TYP).

2. NON-RESILIENT FLOOR FINISHES SHALL OF CLASS I OR CLASS II IN ACCORDANCE WITH NFPA 253 (TYP) AND SHALL COMPLY WITH THE REQUIREMENTS IN SECTION 804

3. SEE DSA APPROVED 02-REH-10012 (09/15/2015) FOR CHANGE OF BUILDING CLASSIFICATION TO TYPE V-B.

LOADS: PER TABLE 1004.1.2

RM NO.	OCC.	ROOM NAME	SF.	OCC. LOAD	TOTAL
101	B	CLASSROOM	976	20	49
102	B	CLASSROOM	993	20	49
103	B	CLASSROOM	997	20	49
104	B	CLASSROOM	994	20	49
105	B	CLASSROOM	820	20	41
106	A-3	COMPUTER LAB	1367	15	92
107	B	CLASSROOM	990	20	49
108	B	CLASSROOM	964	20	49
114	B	OFFICE	124	100	2
115	B	OFFICE	126	100	2
116	B	OFFICE	158	100	2
117	B	OFFICE	138	100	2
118	B	OFFICE	137	100	2
119	B	OFFICE	660	100	7
120	A-3	LOUNGE	1589	15	106
121	B	RECEPTION	281	100	3
125	B	OFFICE	104	100	2
126	B	OFFICE	294	100	3
127	B	OFFICE	137	100	2
128	A-3	CONFERENCE	654	15	44
129	A-3	CONFERENCE	512	15	35
		TOTAL	13,016		639

EGRESS WIDTH (PER 1005)

OCCUP.		DOORS (0.2) REQ'D	DOORS (0.2) PROV.
1	177	35.4	72.0
2	53.0	10.6	36.0
3	46	9.2	36.0
3A	21	4.2	36.0
3B	21	4.2	36.0
3C	21	4.2	36.0
3D	21	4.2	36.0
3E	21	4.2	36.0
4	115	23	36.0
4A	25	5	36.0
4B	25	5	36.0
5	28	5.6	72.0
6	40	15.9	72.0

GENERAL NOTES FOR FIRE EXTINGUISHER (FE): :

1. FIRE EXTINGUISHERS (FE) PROVIDED SHALL BE IN COMPLIANCE WITH CFC SECTION 906. CLASSIFICATION SHALL BE IN ACCORDANCE WITH CCR TITLE 19, DIV 1, SECT 565.1(A): LIGHT HAZARD (FOR CLASSROOMS), SEE A2.00 FOR LOCATIONS.

2. FE SHALL BE INSPECTED PER SEC 574.1 ON A MONTHLY BASIS UNLESS OTHERWISE DETERMINED BY THE GOVERNING FIRE AUTHORITY. FE SHALL REMAIN FULLY CHARGED AND KEPT IN THEIR DESIGNATED PLACES AT ALL TIMES.

3. PER TITLE 19, DIV.1, SEC.568, TABLE 2, FE SHALL BE RATED AS 2-A (MIN) AND SHALL BE PROVIDED WITH A MAXIMUM FLOOR AREA PER FE AT 3000SF. TOTAL AREA = 16,400/3000 = 6 FE MIN. MAXIMUM TRAVEL DISTANCE FROM ANY POINT IN THE BUILDING SHALL NOT EXCEED 75' MIN. (TYP)

SHEET NOTES:

1. ADJUST (E) DOOR OPENERS AT ACCESSIBLE ENTRIES (2 TOTAL).

2. REINSTALL (E) METAL COILING DOOR ASSEMBLY AND (E) LOWER PLAM COUNTER FOR ACCESS COMPLIANCE.

3. CONFORM (N) CONC WITH EXISTING (SSD), PATCH IN (N)WALL/CEILING FRAMING, GWB (PREP/TAPE/PAINT), TRIM TO MATCH EXISTING. WHERE WORK OCCURS AT DOORS ,REINSTALL (E) DOORS W/ NEW FRAMING TO MATCH. NEW CARPET TILES SHALL BE REPLACED IN WHOLE SQUARES ONLY (TYP).

4. REMOVE (E) SHORING ONLY AFTER SEOR CONFIRMS IN WRITING WITH CONTRACTOR

GENERAL EGRESS DOOR COMPLIANCE (PER CBC SEC. 1010.1.9):

1. DOOR HANDLES, PULLS, LATCHES, LOCKS AND OTHER OPERATING DEVICES ON DOORS REQUIRED TO BE ACCESSIBLE BY CHAPTER 11A OR 11B OF THE CALIFORNIA BUILDING CODE SHALL NOT REQUIRE TIGHT GRASPING, TIGHT PINCHING OR TWISTING OF THE WRIST TO OPERATE.

2. DOOR HANDLES, PULLS, LATCHES, LOCKS AND OTHER OPERATING DEVICES SHALL BE INSTALLED 34 INCHES (864 MM) MINIMUM AND 48 INCHES (1219 MM) MAXIMUM ABOVE THE FINISHED FLOOR.

3. MANUALLY OPERATED FLUSH BOLTS OR SURFACE BOLTS ARE NOT PERMITTED.

4. THE UNLATCHING OF ANY DOOR OR LEAF SHALL NOT REQUIRE MORE THAN ONE OPERATION. DOORS SERVING ROOMS OR SPACES WITH AN OCCUPANT LOAD OF 50 OR MORE IN A GROUP A OCCUPANCY, ASSEMBLY AREA NOT CLASSIFIED AS AN ASSEMBLY OCCUPANCY, E, OCCUPANCIES SHALL NOT BE PROVIDED WITH A LATCH OR LOCK OTHER THAN PANIC HARDWARE OR FIRE EXIT HARDWARE.

5. PER 1010.1.10.1 WHERE PANIC OR FIRE EXIT HARDWARE IS INSTALLED, IT SHALL COMPLY WITH THE FOLLOWING: PANIC HARDWARE SHALL BE LISTED IN ACCORDANCE WITH UL 305,
FIRE EXIT HARDWARE SHALL BE LISTED IN ACCORDANCE WITH UL 10C AND UL 305, THE ACTUATING PORTION OF THE RELEASING DEVICE SHALL EXTEND NOT LESS THAN ONE-HALF OF THE DOOR LEAF WIDTH, AND THE MAXIMUM UNLATCHING FORCE SHALL NOT EXCEED 15 POUNDS (67 N).

6. ALL EXITS DOORS SHALL HAVE COMPLIANT PANIC HARDWARE, VIF (TYP).

OWNER:

Solano Community College District
2000 North Village Parkway
Vacaville, CA 95688

ARCHITECT:

CA ARCHITECTS
475 Gate Five Road, Suite 107
Sausalito, CA 94965
T 415.331.7655
F 415.331.7656

PROJECT:

Vacaville Classroom Building (Annex) Renovation Project

CONSULTANT TEAM:

STAMP

LICENSED ARCHITECT JOSHUA COHN C 23410 REN. 11-30-17 STATE OF CALIFORNIA

SHEET LEGEND:

ISSUE/REVISION:

NO:	DATE:	DESCRIPTION:
	04/25/2017	ISSUE FOR DD 100%
	06/06/2017	ISSUE FOR CD 50%
	06/30/2017	ISSUE FOR CD 60%
	07/20/2017	ISSUE FOR CD 100%
	10/18/2017	DSA BACKCHECK

KEY PLAN:

FILE: 48-C1
IDENTIFICATION STAMP
DIVISION OF THE STATE ARCHITECT
02-116082
AC ICC FLS GBC SSPVL
DATE: 10/31/2017

DATE:
PROJECT NO:
PERMIT APPLICATION NO.:

EGRESS PLAN

A0.30

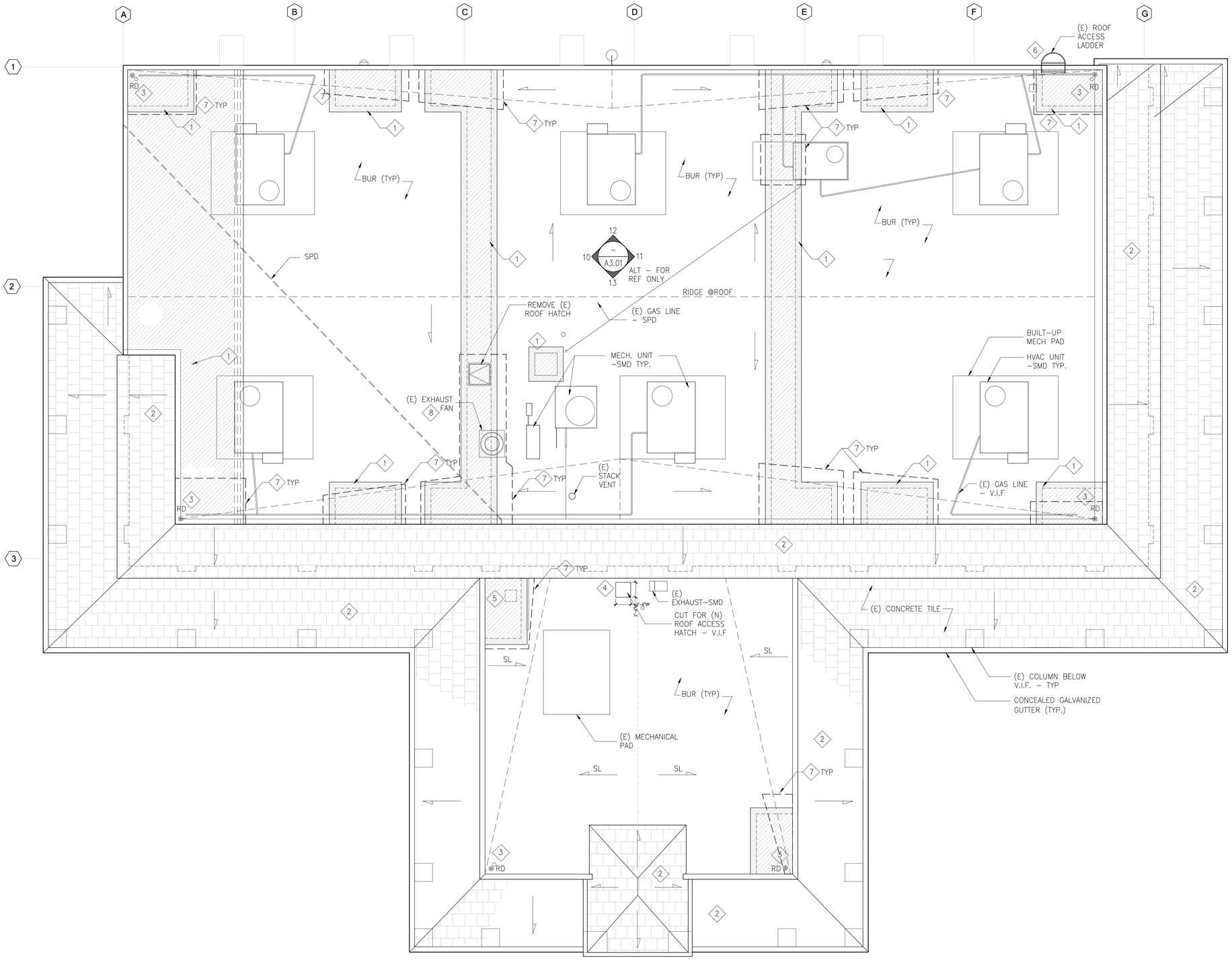

10 EXISTING ROOF PLAN

SCALE: 1/8" = 1' - 0"

SHEET NOTES:

1. REMOVE (E) BUILT-UP ROOF (BUR), IN AREAS SHOWN, COORDINATE WITH STRUCTURAL DRAWINGS FOR LOCATIONS (TYP). CONTRACTOR SHALL MOVE AND/OR CAP ALL UTILITIES TO ALLOW FOR WORK TO BE ADEQUATELY PERFORMED (TYP).
2. REMOVE (E) CONCRETE ROOF TILES AND PREPARE ROOF SUBSTRATE FOR INSTALLATION OF (N) METAL STANDING SEAM ROOF (TYP.)
3. REMOVE (E) ROOF DRAINS/OVERFLOW (TYP) - SPD
4. DEMO EXTERIOR ROOF AS SHOWN FOR NEW ACCESS HATCH , COORINDATE WITH LOCATION FOR NEW ACCESS LADDER BELOW (TYP).
5. DEMO TO PROVIDE FOR (N) EXHAUST FAN - SMD.
6. REMOVE (E) LADDER AND ALL RELATED ATTACHMENTS REQ'D TO PREPARE TO (N) ROOF
7. DASHED LINES INDICATE APPROXIMATE AREAS OF (E) CRICKETS, EQUIPMENT AND SUPPORT PLATFORMS THAT WILL REQUIRE ACCESS TO SHEATHING BELOW FOR STRUCTURAL WORK (SSD), CONTRACTOR SHALL PROVIDE ACCESS AS REQ'D AND TEMP CAP AND RELOCATE EQUIPMENT WHILE WORK IS BEING PERFORMED (TYP).
8. REMOVE (E) EXISTING FAN TO REINSTALLION

GENERAL ROOF DEMO NOTE:

CONTRACTOR SHALL REMOVE AREAS OF THE ROOF AS INDICATED IN PREPARATION FOR (N) ROOF. COORDINATE WORK ON ROOF WITH STRUCTURAL, MECHANICAL, ELECTRICAL AND fa DOCUMENTS AS REQ'D FOR THE WORK TO BE PERFORMED (TYP).

OWNER:

Solano Community College District
2000 North Village Parkway
Vacaville, CA 95688

ARCHITECT:

CA ARCHITECTS
475 Gate Five Road, Suite 107
Sausalito, CA 94965
T 415.331.7655
F 415.331.7656

PROJECT:

Vacaville Classroom Building (Annex) Renovation Project

CONSULTANT TEAM:

STAMP

LICENSED ARCHITECT
JOSHUA COHN
C 23410
REN. 11-30-17
STATE OF CALIFORNIA

SHEET LEGEND:

ISSUE/REVISION:

NO:	DATE:	DESCRIPTION:
	04/25/2017	ISSUE FOR DD 100%
	06/06/2017	ISSUE FOR CD 50%
	06/30/2017	ISSUE FOR CD 60%
	07/20/2017	ISSUE FOR CD 100%
	10/18/2017	DSA BACKCHECK

KEY PLAN:

FILE: 48-C1
IDENTIFICATION STAMP
DIVISION OF THE STATE ARCHITECT
02-116082
AC TCC FLS GBC SS PVL
DATE: 10/31/2017

SCALE:
DATE:
PROJECT NO:
PERMIT APPLICATION NO.:

EXISTING/DEMO ROOF PLAN

D1.01

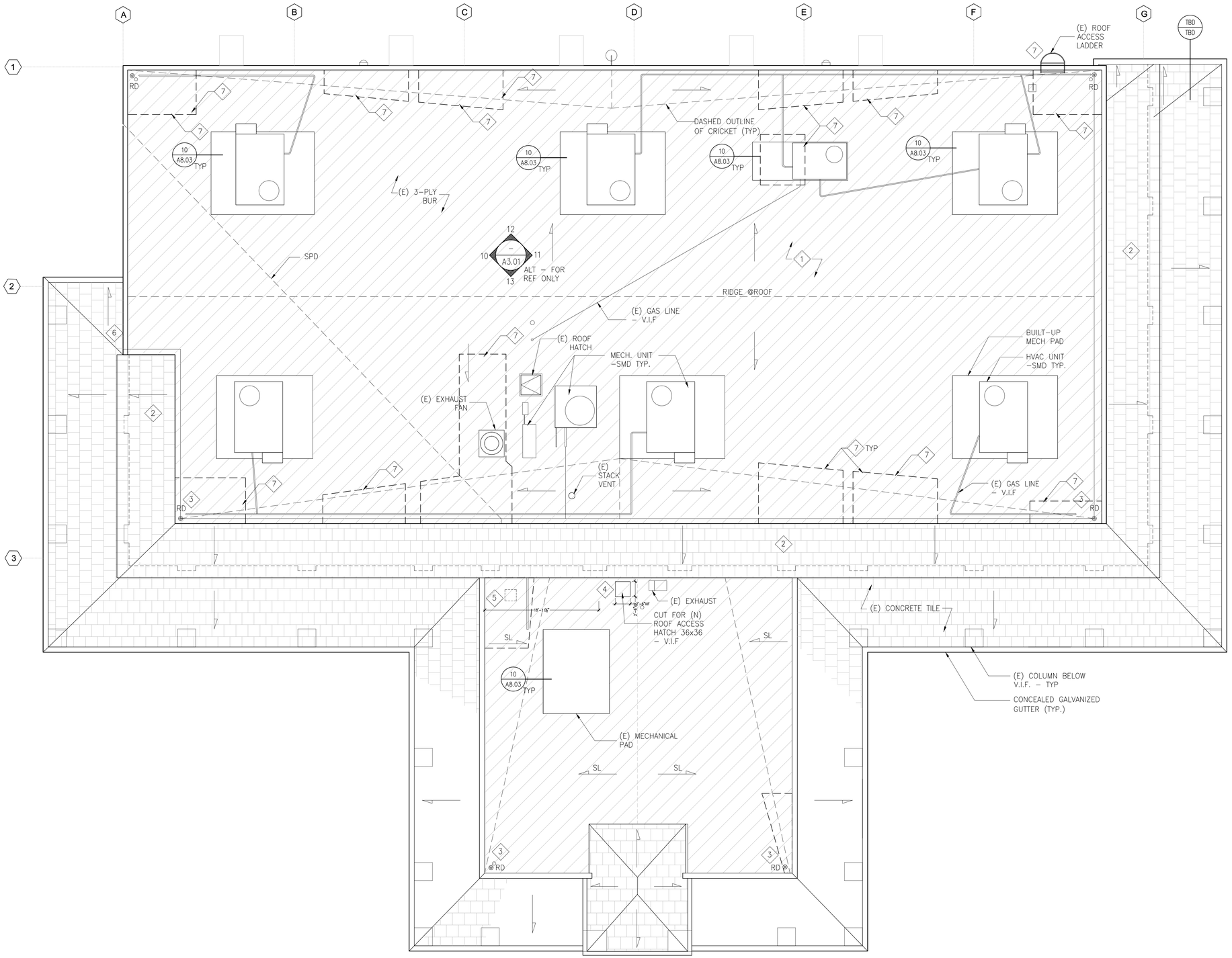

10 EXISTING ROOF PLAN

SCALE: 1/8" = 1' - 0"

SHEET NOTES:

1. REMOVE (E) BUILT-UP ROOF (BUR) AS INDICATED. SEE DETAILS FOR EXTENT OF REMOVAL AT EQUIPMENT PADS AND PARAPET (TYP).
2. REMOVE (E) CONCRETE TILES, COPING, FLASHING AND ACCESSORIES AS REQ'D AND PREPARE SUBSTRATE FOR INSTALLATION OF (N) METAL SEAM ROOF (TYP.)
3. REMOVE (E) ROOF DRAINS/OVERFLOW (TYP) - SPD
4. DEMO FOR EXTERIOR ROOF ACCESS HATCH, COORDINATE WITH INSTALL OF ACCESS LADDER BELOW.
5. DEMO TO PROVIDE FOR (N) EXHAUST FAN.
6. REMOVE (E) LADDER AND ALL RELATED ATTACHMENTS TO PREPARE TO (N) ROOF
7. DASHED LINES INDICATE APPROXIMATE AREAS OF (E) CRICKETS, EQUIPMENT AND SUPPORT PLATFORMS THAT WILL REQUIRE ACCESS TO SHEATHING BELOW FOR STRUCTURAL WORK (SSD), CONTRACTOR SHALL PROVIDE ACCESS AS REQ'D AND TEMP CAP AND RELOCATE EQUIPMENT WHILE WORK IS BEING PERFORMED (TYP).

GENERAL ROOF DEMO NOTE:

CONTRACTOR SHALL REMOVE AREAS OF THE ROOF AS INDICATED IN PREPARATION FOR (N) ROOF. COORDINATE WORK ON ROOF WITH STRUCTURAL, MECHANICAL, ELECTRICAL AND fa DOCUMENTS AS REQ'D FOR THE WORK TO BE PERFORMED (TYP).

OWNER:

Solano Community College District
2000 North Village Parkway
Vacaville, CA 95688

ARCHITECT:

CA ARCHITECTS
475 Gate Five Road, Suite 107
Sausalito, CA 94965
T 415.331.7655
F 415.331.7656

PROJECT:

Vacaville Classroom Building (Annex) Renovation Project

CONSULTANT TEAM:

STAMP

LICENSED ARCHITECT
JOSHUA COHN
C 23410
REN. 11-30-17
STATE OF CALIFORNIA

SHEET LEGEND:

ISSUE/REVISION:

NO:	DATE:	DESCRIPTION:
	04/25/2017	ISSUE FOR DD 100%
	06/06/2017	ISSUE FOR CD 50%
	06/30/2017	ISSUE FOR CD 60%
	07/20/2017	ISSUE FOR CD 100%
	10/18/2017	DSA BACKCHECK

KEY PLAN:

FILE: 48-C1
IDENTIFICATION STAMP
DIVISION OF THE STATE ARCHITECT
02-116082
AC JCC FLS GBC SS PVL
DATE: 10/31/2017

SCALE:
DATE:
PROJECT NO:
PERMIT APPLICATION NO.:

EXISTING/DEMO ROOF PLAN

D1.01 ALT

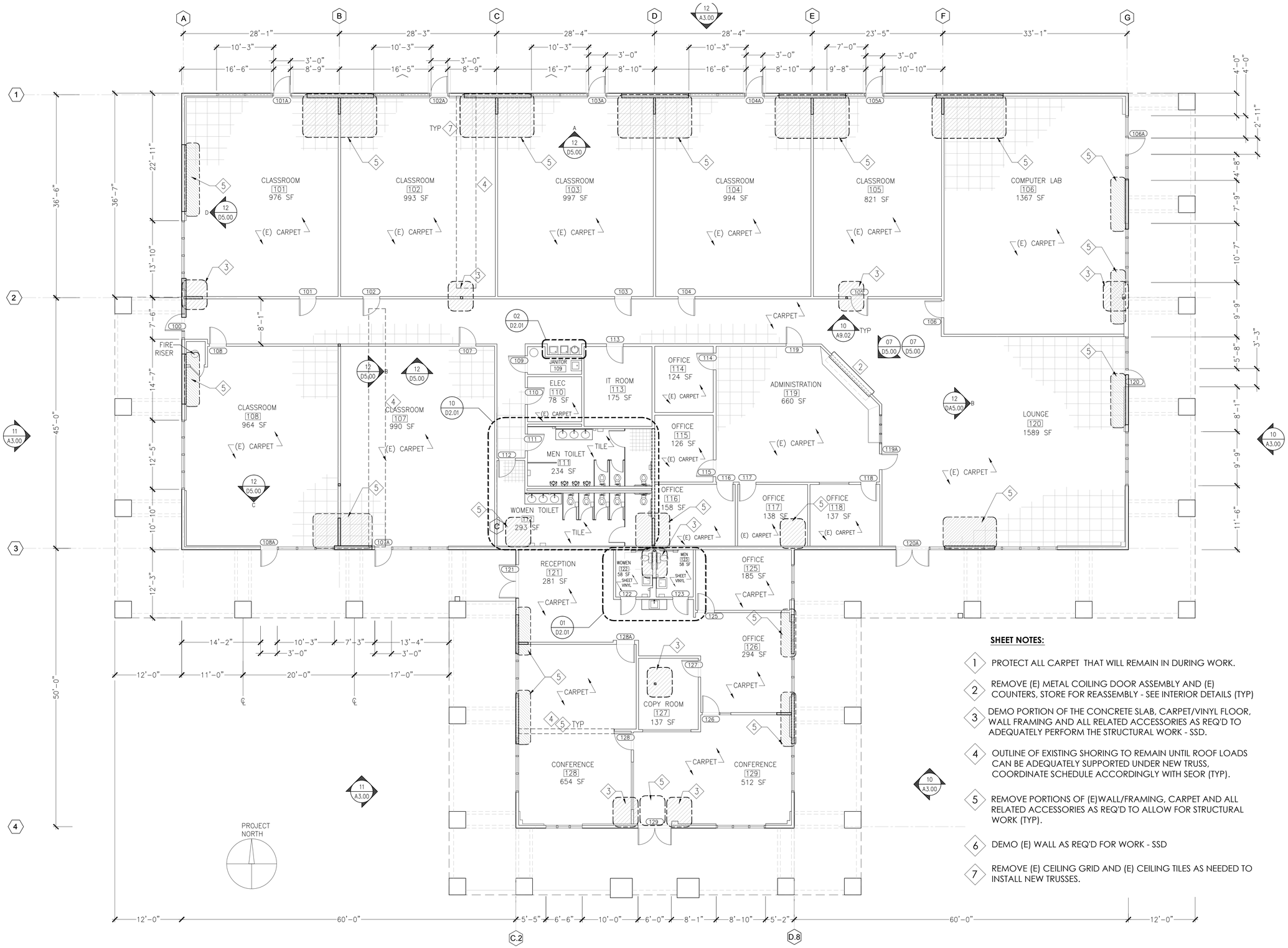

SHEET NOTES:

1. PROTECT ALL CARPET THAT WILL REMAIN IN DURING WORK.
2. REMOVE (E) METAL COILING DOOR ASSEMBLY AND (E) COUNTERS, STORE FOR REASSEMBLY - SEE INTERIOR DETAILS (TYP)
3. DEMO PORTION OF THE CONCRETE SLAB, CARPET/VINYL FLOOR, WALL FRAMING AND ALL RELATED ACCESSORIES AS REQ'D TO ADEQUATELY PERFORM THE STRUCTURAL WORK - SSD.
4. OUTLINE OF EXISTING SHORING TO REMAIN UNTIL ROOF LOADS CAN BE ADEQUATELY SUPPORTED UNDER NEW TRUSS, COORDINATE SCHEDULE ACCORDINGLY WITH SEOR (TYP).
5. REMOVE PORTIONS OF (E)WALL/FRAMING, CARPET AND ALL RELATED ACCESSORIES AS REQ'D TO ALLOW FOR STRUCTURAL WORK (TYP).
6. DEMO (E) WALL AS REQ'D FOR WORK - SSD
7. REMOVE (E) CEILING GRID AND (E) CEILING TILES AS NEEDED TO INSTALL NEW TRUSSES.

10 EXISTING / DEMO FLOOR PLAN

SCALE: 1/8" = 1' - 0"

OWNER:

Solano Community College Distric
2000 North Village Parkway
Vacaville, CA 95688

ARCHITECT:

CA ARCHITECTS
475 Gate Five Road, Suite 107
Sausalito, CA 94965
T 415.331.7655
F 415.331.7656

PROJECT:

Vacaville Classroom Building (Annex) Renovation Project

CONSULTANT TEAM:

STAMP

LICENSED ARCHITECT JOSHUA COHN C 23410 REN. 11-30-17 STATE OF CALIFORNIA

SHEET LEGEND:

ISSUE/REVISION:

NO:	DATE:	DESCRIPTION:
	04/25/2017	ISSUE FOR DD 100%
	06/06/2017	ISSUE FOR CD 50%
	06/30/2017	ISSUE FOR CD 60%
	07/20/2017	ISSUE FOR CD 100%
	10/18/2017	DSA BACKCHECK

KEY PLAN:

FILE: 48-C1
IDENTIFICATION STAMP
DIVISION OF THE STATE ARCHITECT
02-116082
AC TCC FLS GBC SS PVL
DATE: 10/31/2017

DATE:
PROJECT NO:
PERMIT APPLICATION NO.:

EXISTING / DEMO FLOOR PLAN

D2.00

ROOM NAME	AREA SF	LOAD FACTOR	OCC.	MALE	FEMALE	M.WC		M.URN		F.WC		M.LAV		F.LAV		DRINKING FOUNTAIN	
						REQ.		REQ.		REQ.		REQ.		REQ.		REQ.	
						1: 1–50 2: 51–100		1: 1–100		1: 1–15 2: 16–30 3: 31–50 4: 51–100		1: 1–75 2: 76–150		1: 1–50 2: 51–100		1 PER 150	
CLASSROOM	8,102	50	162.04	82.02	82.02	2		1		4		2		2		2	
						1: 1–50 2: 51–100		1: 1–100		1: 1–15 2: 16–30 3: 31–50 4: 51–100		1: 1–75 2: 76–150		1: 1–50 2: 51–100		1 PER 150	
OFFICES	1,343	200	6.715	3.36	3.36	1		1		1		1		1		0	
						1 PER 150		1 PER 100		1 PER 30		1 PER 40		1 PER 40		1 PER 150	
LOBBY/LOUNGE	1,530	30	51	25.5	25.5	0		0		0		0		0		0	
						REQ.	PROV.	REQ.	PROV.	REQ.	PROV.	REQ.	PROV.	REQ.	PROV.	REQ.	PROV.
					TOTAL	3	4	3	4	5	5	3	3	3	3	2	3
ADMIN BUILDING						1: 1–50 2: 51–100		1: 1–100		1: 1–15 2: 16–30		1: 1–75 2: 76–150		1: 1–50 2: 51–100		1 PER 150	
OFFICE (RECEPTION /CONFERENCE)	1,343	200	6.715	3.36	3.36	1		1		1		1		1		0	
																NOT REQ.'D CPC 415.2	
						REQ.	PROV.	REQ.	PROV.	REQ.	PROV.	REQ.	PROV.	REQ.	PROV.	REQ.	PROV.
					TOTAL	1	1	1	0	1	1	1	1	1	1	0	0

12 PLUMBING FIXTURE ANALYSIS

SCALE: 1/2" = 1' - 0"

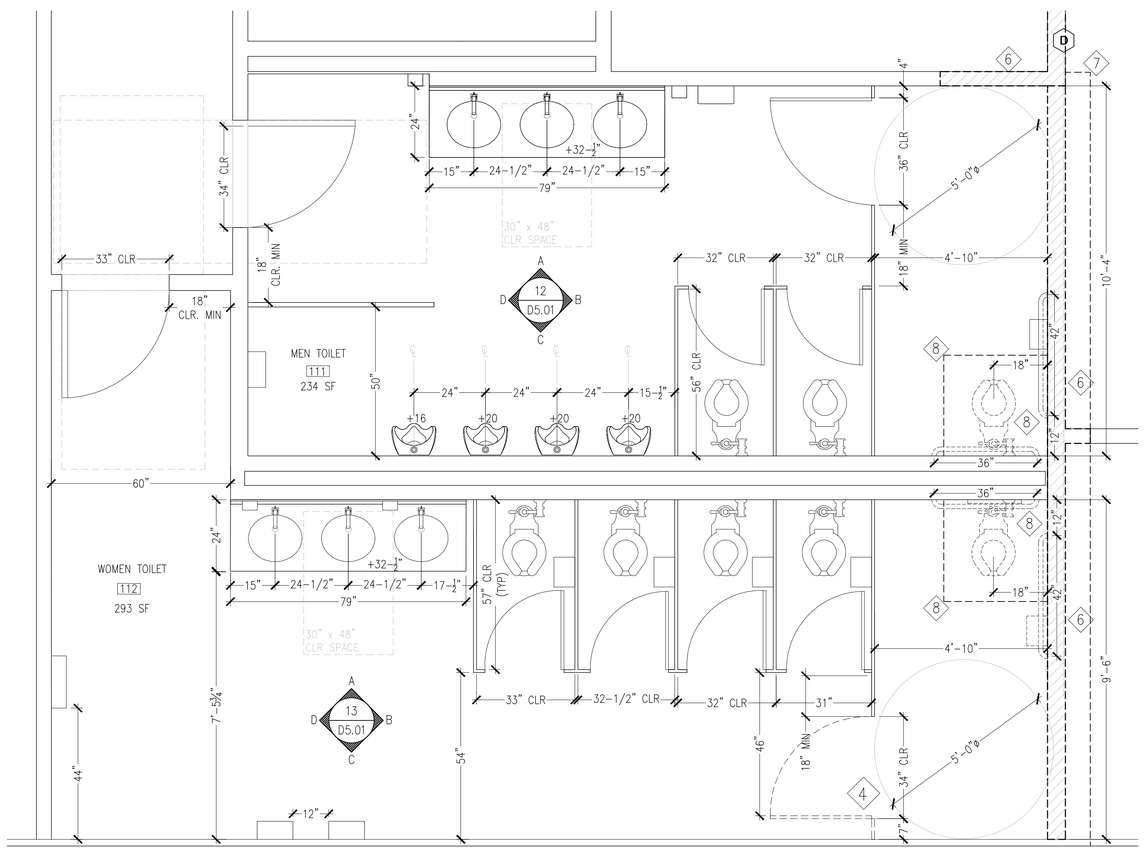

10 TOILET ROOMS 111 & 112 (EXISTING)

SCALE: 1/2" = 1' - 0"

SHEET NOTES:

1. REMOVE (E) SINK AND CABINET, PREP WALL FOR PAINTING AND NEW CARPET (WHOLE SQUARES ONLY) WHERE DAMAGEDS FOR NEW CABINET/SINK (TYP).
2. (E) TOILET ROOMS 111 & 112 - REMOVE AND SALVAGE FOR REINSTALLATION TWO (2) EXISTING TOILET FIXTURES, ADJACENT ACCESSORIES, GRAB BARS AND CARRIERS. PREPARE WASTE LINES AND WATER SUPPLY LINES TO ALLOW FOR 5' MIN STALL WIDTH. DEMO EXISTING WALL AND PREPARE FOR RE-FRAMING.
3. REMOVE AND SALVAGE ALL (3) DRINKING FOUNTAINS. CAP POWER, WATER SUPPLY AND WASTE LINE. DRINKING FOUNTAIN B & C TO BE KEPT FOR REINSTALLATION, DRINKING FOUNTAIN A TO BE SALVAGED TO OWNER. DEMO (E) PARTITION OF THE WALL REQUIRED TO ALLOW FOR (N) PLUMBING AND ELECTRICAL AND BACKING (TYP.) - SEE 02/D2.01
4. REMOVE (E) PARTITION DOOR AT WOMEN'S RESTROOM 112 AND SALVAGE FOR REINSTALLATION TO ALLOW FOR IN-SWING. PROVIDE ALL HARDWARE NECCESSARY FOR SCOPE (TYP)
5. REMOVE AND SALVAGE (E) GARBAGE DISPOSA FOR OWNER
6. DEMO (E) WALL- CONTRACTOR TO DETERMINE ACTUAL SCOPE OF DEMIOLITION (TYP).
7. REMOVE PORTIONS OF (E) CARPET TILE, COVE BASE AND CEILING TILES AS REQ.'D TO PROVIDE SUFFICIENT CLEARANCE FOR NEW WALL. REPLACE TILES IN WHOLE SQUARES ONLY (TYP).
8. DEMO (E) TILE FLOOR AND CONCRETE SLAB BELOW TO ALLOW FOR RE-LOCATED TOILET, SUPPLY AND WASTE LINE (SPD). OUTLINE OF DEMO AREA IS FOR REFERENCER ONLY, CONTRACTOR SHALL DETERMINE ACTUAL AREA OF DEMOLITIION (TYP).
9. REMOVE (E) TOILETS AND ALL RELATED ACCESSORIES FOR REINSTALLATION. DEMO CONC SLAB/TILE/WALL AS REQ'D TO ALLOW FOR STRUCTURAL WORK (SSD), CAP ALL UTILITIES AND PROTECT LINES FOR REINSTALLATION. OUTLINE FOR DEMO IS FOR REFERENCE ONLY, CONTRACTOR SHALL DETERMINE EXTENT (TYP).

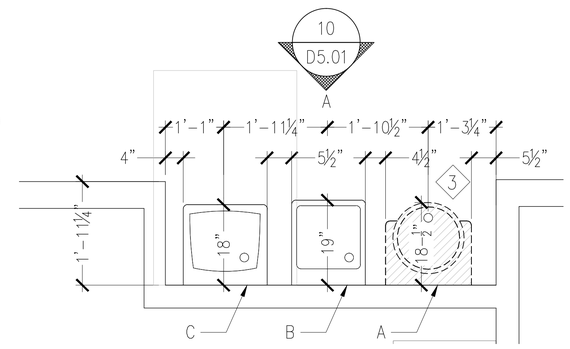

02 EXISTING DRINKING FOUNTAINS

SCALE: 3/4" = 1' - 0"

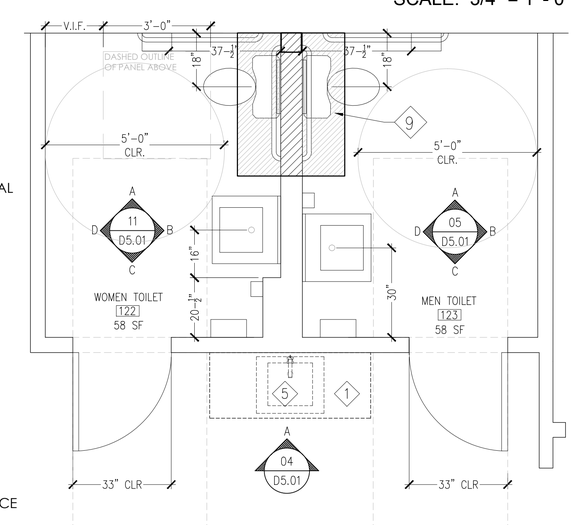

01 TOILET ROOMS 122 & 123 (EXISTING)

SCALE: 1/2" = 1' - 0"

OWNER:

Solano Community College District
2000 North Village Parkway
Vacaville, CA 95688

ARCHITECT:

CA ARCHITECTS
475 Gate Five Road, Suite 107
Sausalito, CA 94965
T 415.331.7655
F 415.331.7656

PROJECT:

Vacaville Classroom Building (Annex) Renovation Project

CONSULTANT TEAM:

STAMP

SHEET LEGEND:

ISSUE/REVISION:

NO:	DATE:	DESCRIPTION:
	04/25/2017	ISSUE FOR DD 100%
	06/06/2017	ISSUE FOR CD 50%
	06/30/2017	ISSUE FOR CD 60%
	07/20/2017	ISSUE FOR CD 100%
	10/18/2017	DSA BACKCHECK

KEY PLAN:

FILE: 48-C1
IDENTIFICATION STAMP
DIVISION OF THE STATE ARCHITECT
02-116082
AC TCC FLS GBC SS PVL
DATE: 10/31/2017

SCALE:
DATE:
PROJECT NO:
PERMIT APPLICATION NO.:

DEMO PLANS EXISTING TOILET ROOMS & DRINKING FOUNTAINS

D2.01

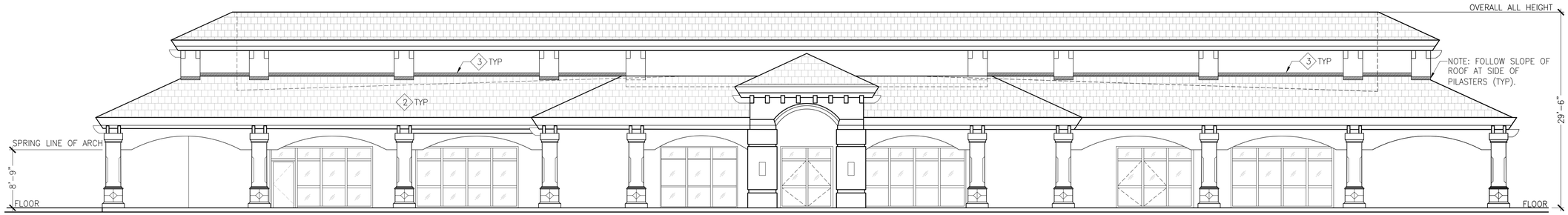

13 EXISTING NORTH ELEVATIONS

SCALE: 1/8" = 1' - 0"

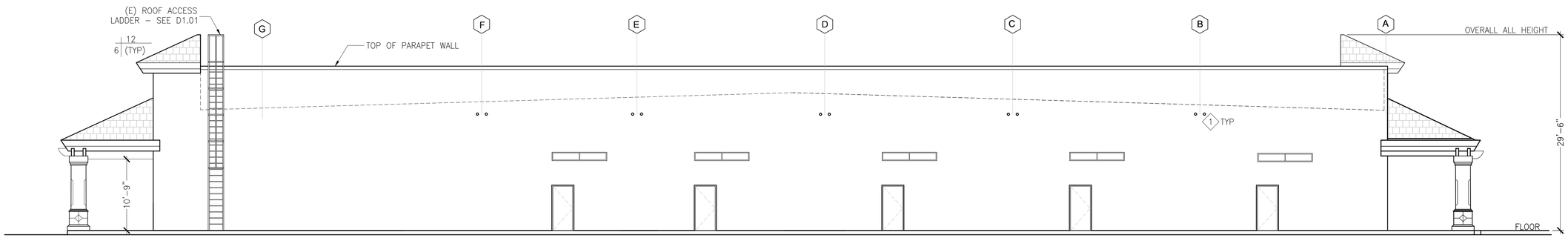

12 EXISTING SOUTH ELEVATIONS

SCALE: 1/8" = 1' - 0"

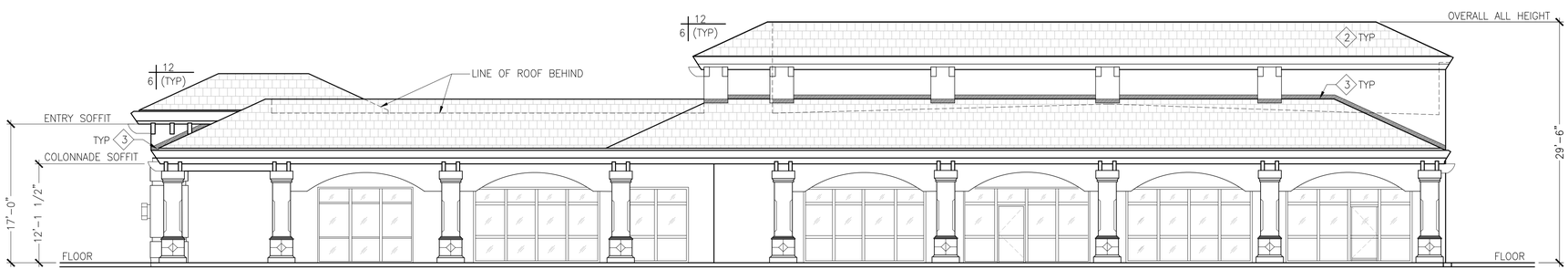

11 EXISTING WEST ELEVATIONS

SCALE: 1/8" = 1' - 0"

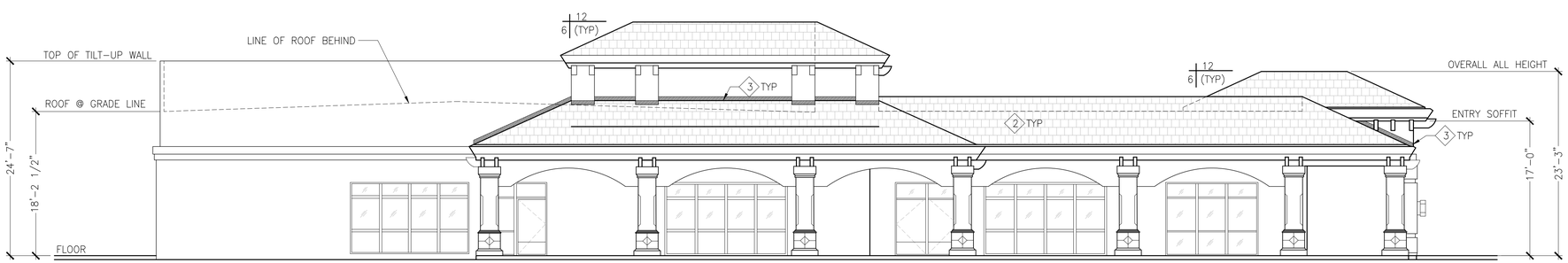

10 EXISTING EAST ELEVATIONS

SCALE: 1/8" = 1' - 0"

SHEET NOTES:

1. CORING HOLES AT (E) CONCRETE PANELS (TYP)-SSD
2. REMOVE (E) CONCRETE TILES AND PREPARE FOR INSTALLATION OF (N) METAL SEAM ROOF (TYP.)
3. PREPARE (E) WALL FOR NEW FLASHING, REMOVE CEMENT PLASTER AS REQ'D (TYP).

EXISTING COLORS
TRIM AND PAINTED SURFACES
(REFERENCE FROM A2.1 - SCCD SET APPROVED DATE 12-25-1995)

- ROOF
"LIFETILE" FLAT CONC. TILE 1220 OR EQUAL
- BUILDING
STUCCO "LA HABRA STUCCO" "PURE IVORY" (MAIN BUILDING STUCCO, STUCCO AT TEMP./PERM. SIGNAGE, DIRECTORIES, TRASH ENCLOSURES, COLUMN BODIES)
STUCCO TRIM "LA HABRA STUCCO" "FRENCH VANILLA" (ACCENT STUCCO, TRIM & COLUMN BASE VENEER)
- WOOD
TRIM "DUNN-EDWARDS" "RODEO TAN" OR EQUAL (ALL WOOD PAINTED TRIM)

OWNER:

Solano Community College Distric
2000 North Village Parkway
Vacaville, CA 95688

ARCHITECT:

CA ARCHITECTS
475 Gate Five Road, Suite 107
Sausalito, CA 94965
T 415.331.7655
F 415.331.7656

PROJECT:

Vacaville Classroom Building (Annex) Renovation Project

CONSULTANT TEAM:

STAMP

LICENSED ARCHITECT
JOSHUA COHN
C 23410
REN. 11-30-17
STATE OF CALIFORNIA

SHEET LEGEND:

ISSUE/REVISION:

NO:	DATE:	DESCRIPTION:
	04/25/2017	ISSUE FOR DD 100%
	06/06/2017	ISSUE FOR CD 50%
	06/30/2017	ISSUE FOR CD 60%
	07/20/2017	ISSUE FOR CD 100%
	10/18/2017	DSA BACKCHECK

KEY PLAN:

FILE: 48-C1
IDENTIFICATION STAMP
DIVISION OF THE STATE ARCHITECT
02-116082
AC TCC FLS GBC SSPVL
DATE: 10/31/2017

DATE:
PROJECT NO:
PERMIT APPLICATION NO.:

EXISTING/DEMO ELEVATIONS

D3.00

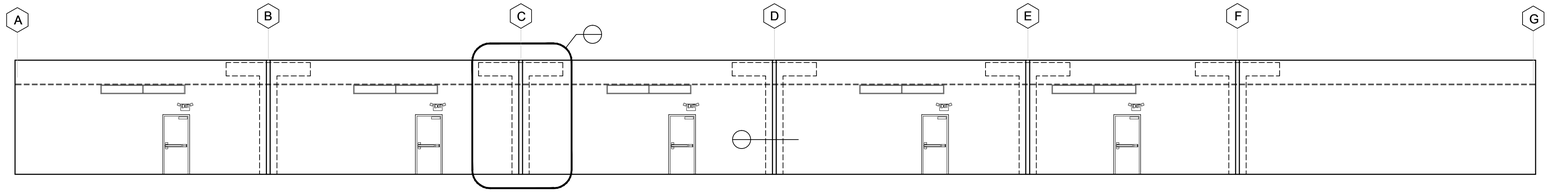

14 EXISTING ELEVATIONS - A

SCALE: 1/8" = 1' - 0"

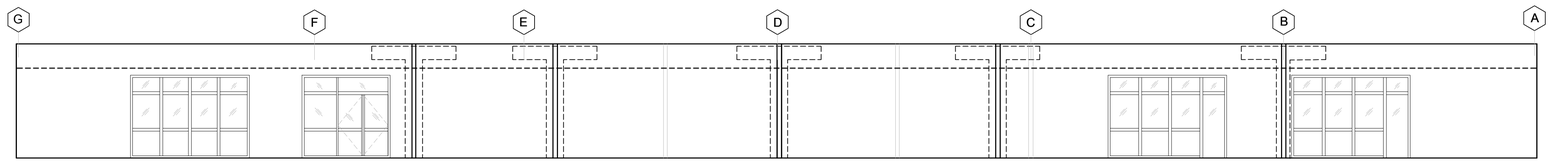

13 EXISTING ELEVATIONS - C

SCALE: 1/8" = 1' - 0"

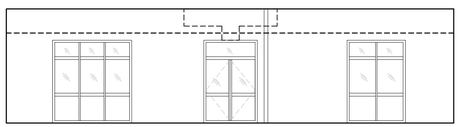

12 EXISTING ELEVATIONS - C

SCALE: 1/8" = 1' - 0"

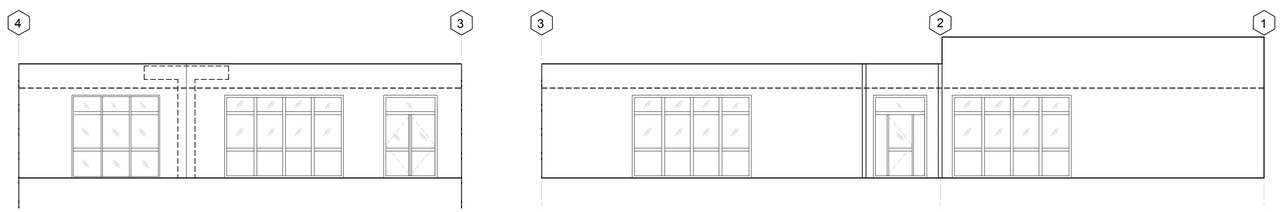

11 EXISTING ELEVATIONS

SCALE: 1/8" = 1' - 0"

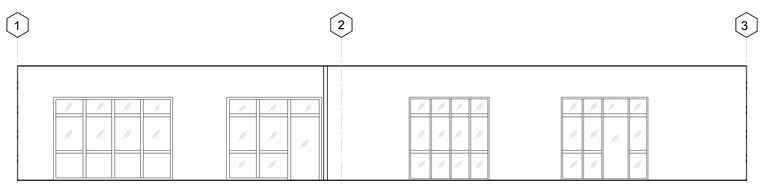

10 EXISTING ELEVATIONS

SCALE: 1/8" = 1' - 0"

SHEET NOTES:

1 COORDINATE ALL (N) STRUCTURAL WORK FOR (N) REINFORCING (SSD). THIS WILL REQUIRE SELECTIVE DEMOLITION AS REQ'D TO PROVIDE APPROPRIATE ACCESS. GC SHALL COORDINATE WORK WITH SUBCONTRACTORS TO ENSURE APPROPRIATE SCOPE OF DEMOLITION FOR ADEQUATE ACCESS FOR STRUCTURAL WORK (TYP). AFTER STRUCTURAL WORK IS COMPLETE, SCOPE SHALL INCLUDE RE-FRAMING, (N) GWB TO PATCH, PREP AND PAINT TO MATCH (TYP).

OWNER:

Solano Community College District
2000 North Village Parkway
Vacaville, CA 95688

ARCHITECT:

CA ARCHITECTS
475 Gate Five Road, Suite 107
Sausalito, CA 94965
T 415.331.7655
F 415.331.7656

PROJECT:

Vacaville Classroom Building
(Annex) Renovation Project

CONSULTANT TEAM:

STAMP

SHEET LEGEND:

ISSUE/REVISION:

NO:	DATE:	DESCRIPTION:
	04/25/2017	ISSUE FOR DD 100%
	06/06/2017	ISSUE FOR CD 50%
	06/30/2017	ISSUE FOR CD 60%
	07/20/2017	ISSUE FOR CD 100%

KEY PLAN:

FILE: 48-C1

IDENTIFICATION STAMP
DIVISION OF THE STATE ARCHITECT

02-116082

AC TCC FLS GBC SS PVL

DATE: 10/31/2017

SCALE:
DATE:
PROJECT NO:
PERMIT APPLICATION NO.:

DEMO/EXISTING ELEVATIONS

D5.00

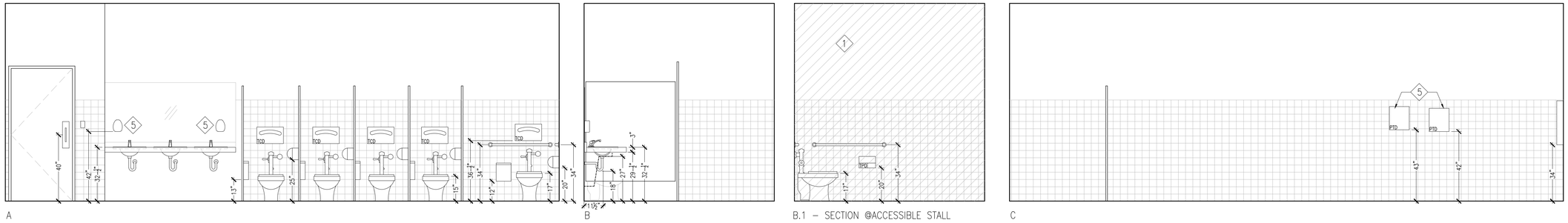

13 EXISTING ELEVATIONS - WOMEN'S RESTROOM

SCALE: 3/8" = 1' - 0"

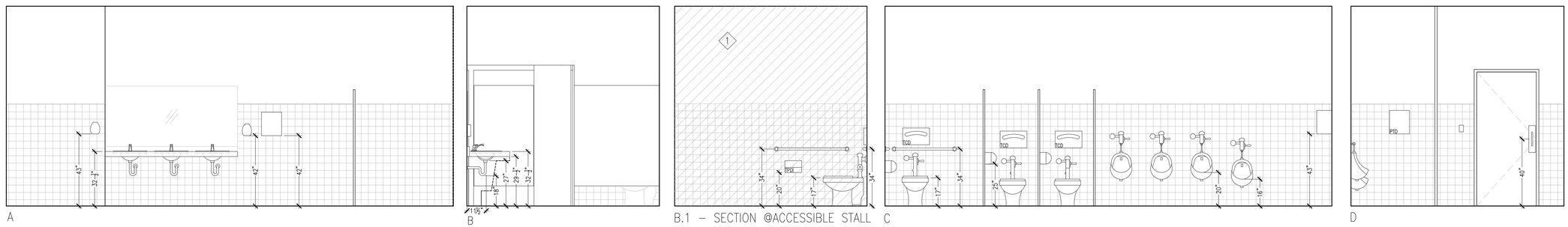

12 EXISTING ELEVATIONS - MEN'S RESTROOM

SCALE: 3/8" = 1' - 0"

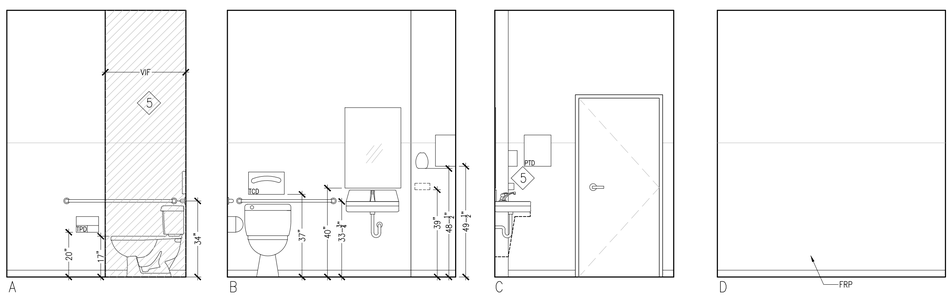

11 EXISTING ELEVATIONS - ADMIN RESTROOM WOMEN

SCALE: 3/8" = 1' - 0"

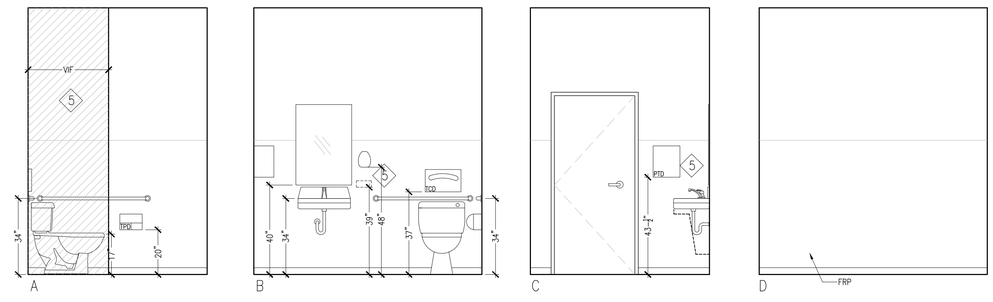

05 EXISTING ELEVATIONS - ADMIN RESTROOMS MEN

SCALE: 3/8" = 1' - 0"

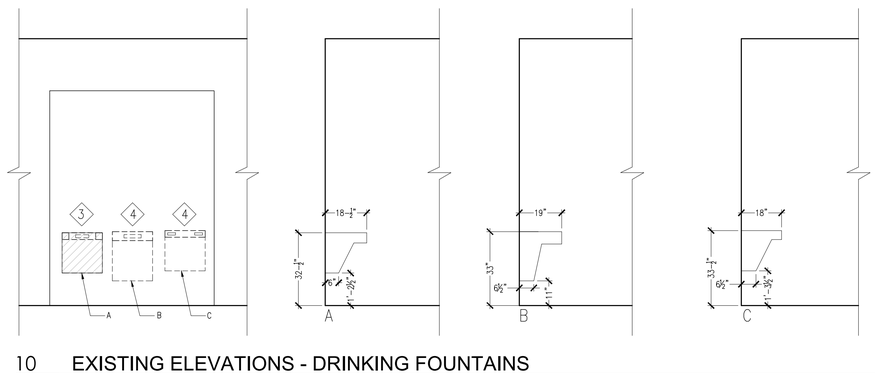

10 EXISTING ELEVATIONS - DRINKING FOUNTAINS

SCALE: 3/8" = 1' - 0"

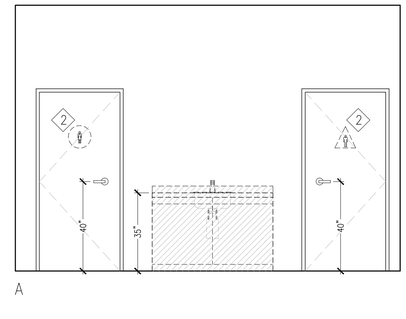

04 ANNEX COUNTERTOP/SINK

SCALE: 3/8" = 1' - 0"

SHEET NOTES:

1. DEMOLISH (E) WALL, FRAMING, GWB, TILE, ETC. AND CAP (E) UTILITIES (IF FOUND) TO BE RE-LOCATED (TYP). COORDINATE CORRESPONDING DEMO @(E) FLOORS, CEILING, AND ALL ADJACENT SPACES THAT WILL BE EFFECTED BY THE DEMO (TYP).
2. REMOVE AND SALVAGE FOR REINSTALLATION (E) RESTROOM SIGNS.
3. REMOVE AND SALVAGE FOR OWNER ONE (1) EXISTING DRINKING FOUNTAIN - SEE 02/A2.01.
4. REMOVE AND SALVAGE FOR REINSTALLATION TWO (2) EXISTING DRINKING FOUNTAINS - SEE 02/D2.01.
5. REMOVE AND SALVAGE FOR REINSTALLATION ACCESSORIES.
6. DEMO WALL AS REQ'D TO ALLOW FOR STRUCTURAL WORK AS SHOWN IN DOCUMENTS, CONTRACTOR SHALL DETERMINE EXTENT OF DEMOLITION TO PERFORM WORK. THIS SHALL DETERMINE EXTENT OF NEW WORK AND SHALL BE INCLUDED CONTRACTOR'S SCOPE (TYP).

GENERAL NOTE: REFER TO 07/A0.20 FOR ALL FIXTURE AND ACCESSORY MOUNTING HEIGHTS AND REQUIRMENTS (TYP).

OWNER:

Solano Community College District
2000 North Village Parkway
Vacaville, CA 95688

ARCHITECT:

CA ARCHITECTS
475 Gate Five Road, Suite 107
Sausalito, CA 94965
T 415.331.7655
F 415.331.7656

PROJECT:

Vacaville Classroom Building
(Annex) Renovation Project

CONSULTANT TEAM:

STAMP

LICENSED ARCHITECT JOSHUA COHN C-23410 REN. 11-30-17 STATE OF CALIFORNIA

SHEET LEGEND:

ISSUE/REVISION:

NO:	DATE:	DESCRIPTION:
	04/25/2017	ISSUE FOR DD 100%
	06/06/2017	ISSUE FOR CD 50%
	06/30/2017	ISSUE FOR CD 60%
	07/20/2017	ISSUE FOR CD 100%

KEY PLAN:

FILE: 48-C1
IDENTIFICATION STAMP
DIVISION OF THE STATE ARCHITECT
02-116082
AC ICC FLS GBC ss PVL
DATE: 10/31/2017

SCALE:
DATE:
PROJECT NO:
PERMIT APPLICATION NO.:

DEMO/EXISTING ELEVATIONS

D5.01

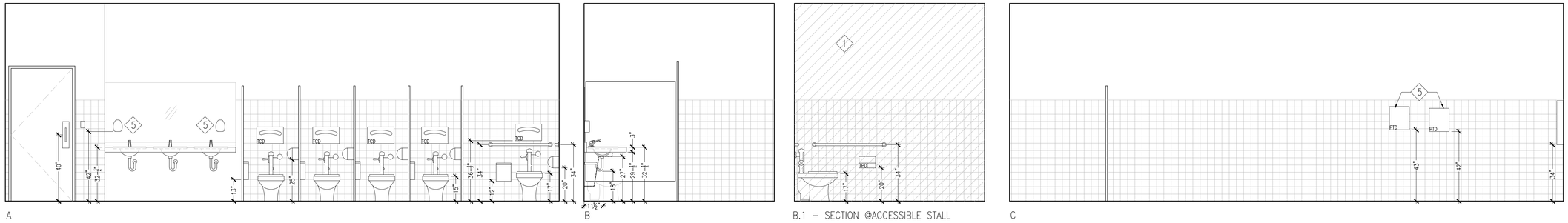

13 EXISTING ELEVATIONS - WOMEN'S RESTROOM

SCALE: 3/8" = 1' - 0"

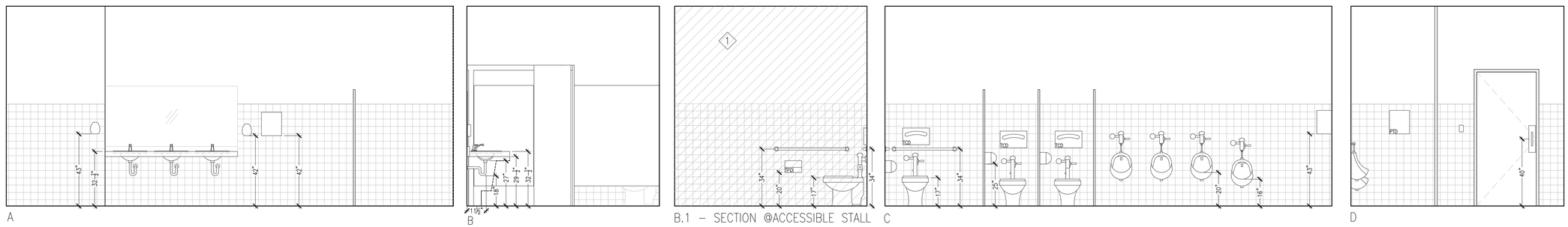

12 EXISTING ELEVATIONS - MEN'S RESTROOM

SCALE: 3/8" = 1' - 0"

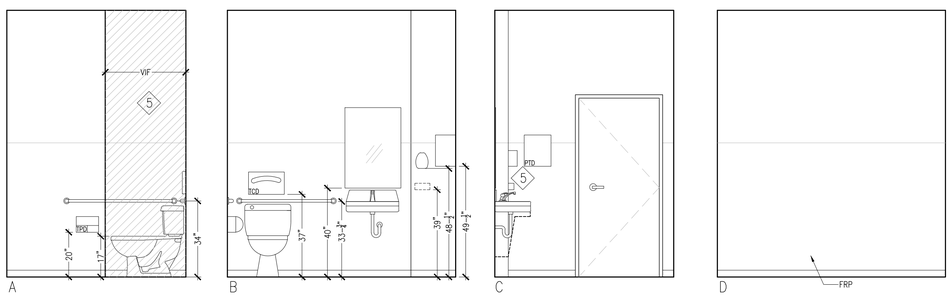

11 EXISTING ELEVATIONS - ADMIN RESTROOM WOMEN

SCALE: 3/8" = 1' - 0"

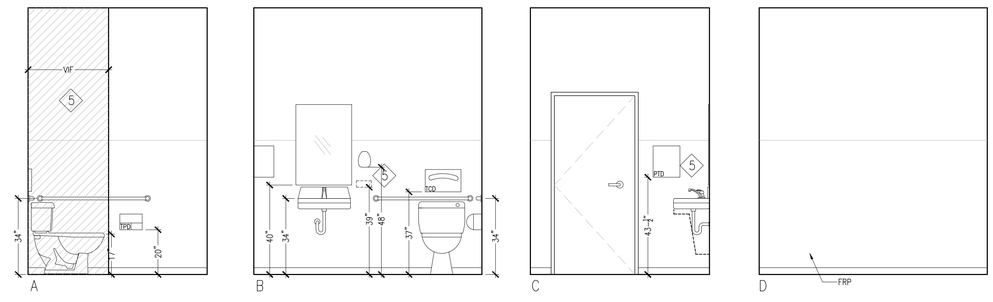

05 EXISTING ELEVATIONS - ADMIN RESTROOMS MEN

SCALE: 3/8" = 1' - 0"

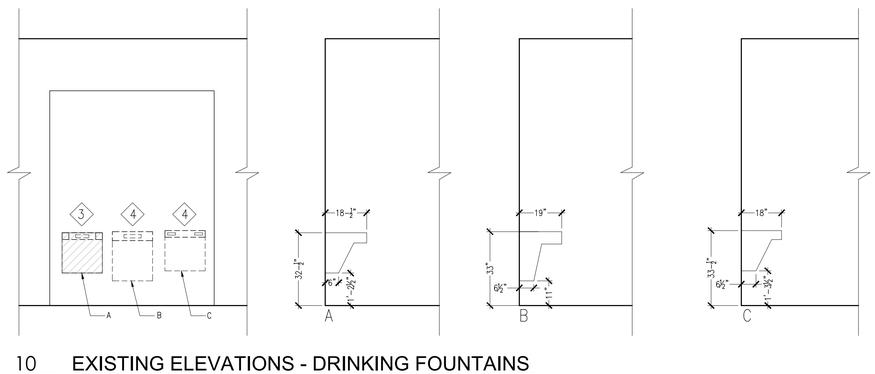

10 EXISTING ELEVATIONS - DRINKING FOUNTAINS

SCALE: 3/8" = 1' - 0"

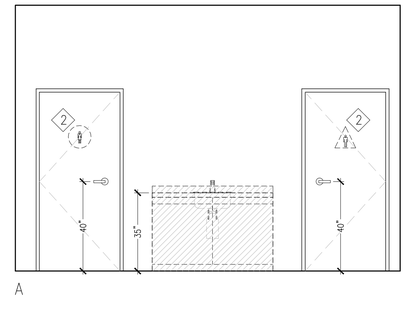

04 ANNEX COUNTERTOP/SINK

SCALE: 3/8" = 1' - 0"

SHEET NOTES:

1. DEMOLISH (E) WALL, FRAMING, GWB, TILE, ETC. AND CAP (E) UTILITIES (IF FOUND) TO BE RE-LOCATED (TYP). COORDINATE CORRESPONDING DEMO @(E) FLOORS, CEILING, AND ALL ADJACENT SPACES THAT WILL BE EFFECTED BY THE DEMO (TYP).
2. REMOVE AND SALVAGE FOR REINSTALLATION (E) RESTROOM SIGNS.
3. REMOVE AND SALVAGE FOR OWNER ONE (1) EXISTING DRINKING FOUNTAIN - SEE 02/A2.01.
4. REMOVE AND SALVAGE FOR REINSTALLATION TWO (2) EXISTING DRINKING FOUNTAINS - SEE 02/D2.01.
5. REMOVE AND SALVAGE FOR REINSTALLATION ACCESSORIES.
6. DEMO WALL AS REQ'D TO ALLOW FOR STRUCTURAL WORK AS SHOWN IN DOCUMENTS, CONTRACTOR SHALL DETERMINE EXTENT OF DEMOLITION TO PERFORM WORK. THIS SHALL DETERMINE EXTENT OF NEW WORK AND SHALL BE INCLUDED CONTRACTOR'S SCOPE (TYP).

GENERAL NOTE: REFER TO 07/A0.20 FOR ALL FIXTURE AND ACCESSORY MOUNTING HEIGHTS AND REQUIRMENTS (TYP).

OWNER:

Solano Community College District
2000 North Village Parkway
Vacaville, CA 95688

ARCHITECT:

CA ARCHITECTS
475 Gate Five Road, Suite 107
Sausalito, CA 94965
T 415.331.7655
F 415.331.7656

PROJECT:

Vacaville Classroom Building
(Annex) Renovation Project

CONSULTANT TEAM:

STAMP

LICENSED ARCHITECT JOSHUA COHN C-23410 REN. 11-30-17 STATE OF CALIFORNIA

SHEET LEGEND:

ISSUE/REVISION:

NO:	DATE:	DESCRIPTION:
	04/25/2017	ISSUE FOR DD 100%
	06/06/2017	ISSUE FOR CD 50%
	06/30/2017	ISSUE FOR CD 60%
	07/20/2017	ISSUE FOR CD 100%

KEY PLAN:

FILE: 48-C1
IDENTIFICATION STAMP
DIVISION OF THE STATE ARCHITECT
02-116082
AC ICC FLS GBC ss PVL
DATE: 10/31/2017

SCALE:
DATE:
PROJECT NO:
PERMIT APPLICATION NO.:

DEMO/EXISTING ELEVATIONS

D5.01

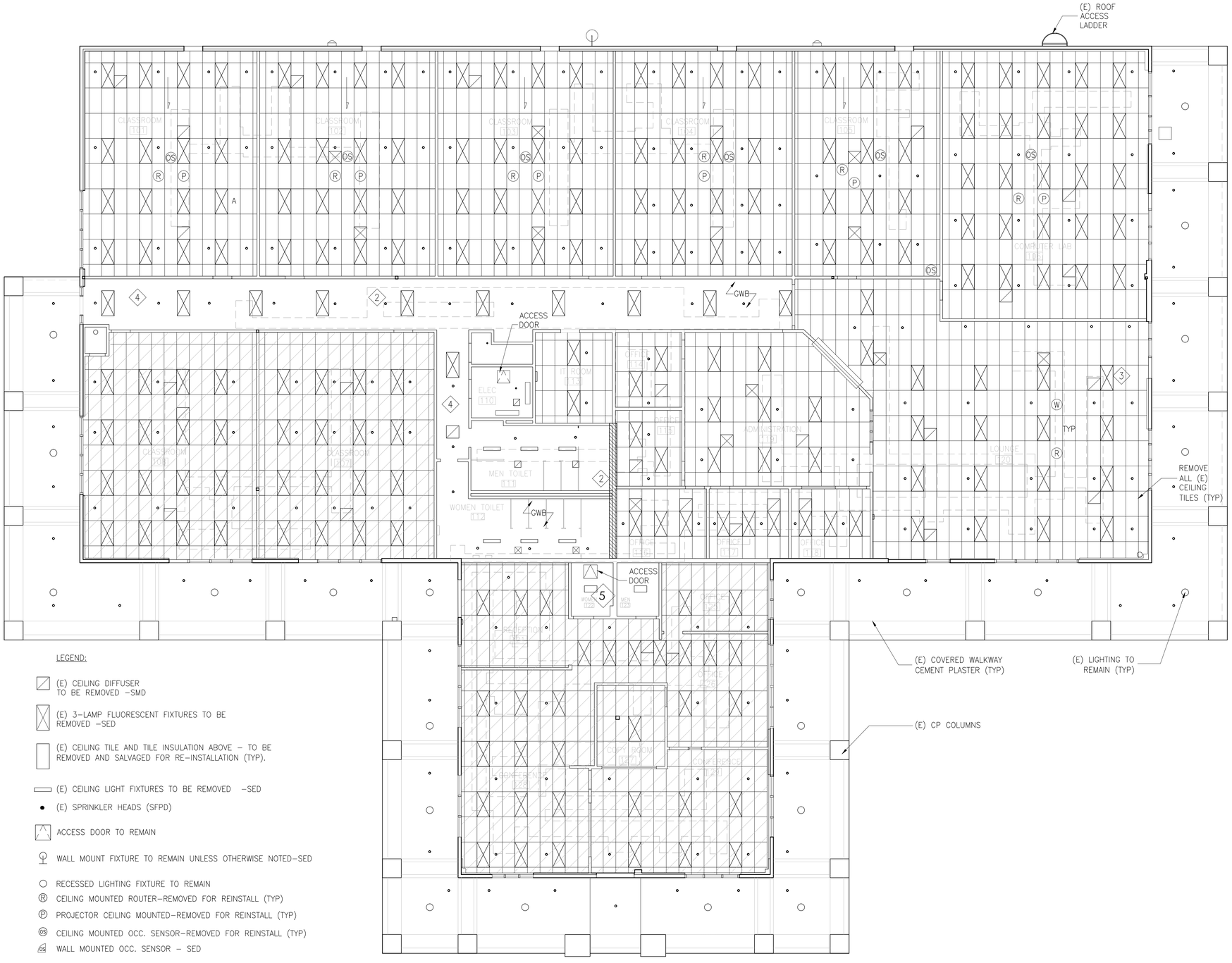

LEGEND:

- (E) CEILING DIFFUSER TO BE REMOVED –SMD
- (E) 3–LAMP FLUORESCENT FIXTURES TO BE REMOVED –SED
- (E) CEILING TILE AND TILE INSULATION ABOVE – TO BE REMOVED AND SALVAGED FOR RE–INSTALLATION (TYP).
- (E) CEILING LIGHT FIXTURES TO BE REMOVED –SED
- (E) SPRINKLER HEADS (SFPD)
- ACCESS DOOR TO REMAIN
- WALL MOUNT FIXTURE TO REMAIN UNLESS OTHERWISE NOTED–SED
- RECESSED LIGHTING FIXTURE TO REMAIN
- (R) CEILING MOUNTED ROUTER–REMOVED FOR REINSTALL (TYP)
- (P) PROJECTOR CEILING MOUNTED–REMOVED FOR REINSTALL (TYP)
- (OS) CEILING MOUNTED OCC. SENSOR–REMOVED FOR REINSTALL (TYP)
- (OS) WALL MOUNTED OCC. SENSOR – SED

10 EXISTING RCP

SCALE: 1/8" = 1' - 0"

GENERAL NOTES:

1. DEMO ENTIRE EXISTING SUSPENDED CEILING GRID, HANGERS AND SUPPORTS. SALVAGE EXISTING TILES AND CEILING TILE INSULATION FOR RE-USE (TYP). EXISTING GWB CEILING SHALL REMAIN IN PLACE UNLESS OTHERWISE INDICATED. EXISTING LIGHT FIXTURES SHALL BE REMOVED FOR SALVAGE BYGC. LOCATION OF NEW SUSPENDED CEILING SHA;LL REPLICATE EXISTING FOR ORIENTATION AND LOCATION (TYP)
2. SEE SHEET A9.03 FOR ADD'L REQ'TS (TYP)

SHEET NOTES:

1. REMOVE EXISTING SUSPENDED CEILING GRID, HANGERS AND SUPPORTS.
2. OUTLINE OF WALLS FOR DEMO (TYP).
3. DEMO (E) LIGHTING (TYP).
4. LEAVE (E) GWB WHERE OCCURS - HALLWAYS, RESTROOMS 111 & 112, RESTROOMS 122 & 123.
5. REMOVE (E) GWB, FIXTURES AND EQUIPMENT TO ALLOW WORK AS OUTLINED ON S2.1

OWNER:

Solano Community College District
2000 North Village Parkway
Vacaville, CA 95688

ARCHITECT:

CA ARCHITECTS
475 Gate Five Road, Suite 107
Sausalito, CA 94965
T 415.331.7655
F 415.331.7656

PROJECT:

Vacaville Classroom Building (Annex) Renovation Project

CONSULTANT TEAM:

STAMP

LICENSED ARCHITECT JOSHUA COHN C 23410 REN. 11-30-17 STATE OF CALIFORNIA

SHEET LEGEND:

ISSUE/REVISION:

NO:	DATE:	DESCRIPTION:
	04/25/2017	ISSUE FOR DD 100%
	06/06/2017	ISSUE FOR CD 50%
	06/30/2017	ISSUE FOR CD 60%
	07/20/2017	ISSUE FOR CD 100%
	10/18/2017	DSA BACKCHECK

KEY PLAN:

FILE: 48-C1
IDENTIFICATION STAMP
DIVISION OF THE STATE ARCHITECT
02-116082
AC TCC FLS GBC SS PVL
DATE: 10/31/2017

SCALE:
DATE:
PROJECT NO:
PERMIT APPLICATION NO.:

EXISTING/ DEMO RCP

D6.00

ACCESSIBLE PARKING
(PER TABLE 11B-208.2)

Total Number of Parking Spaces in Parking Facility (Lot or Garage)	(E)	Minimum Number of Accessible Parking Spaces Required	(E)
201 - 300	289	REQ'D 7	PROV. 8

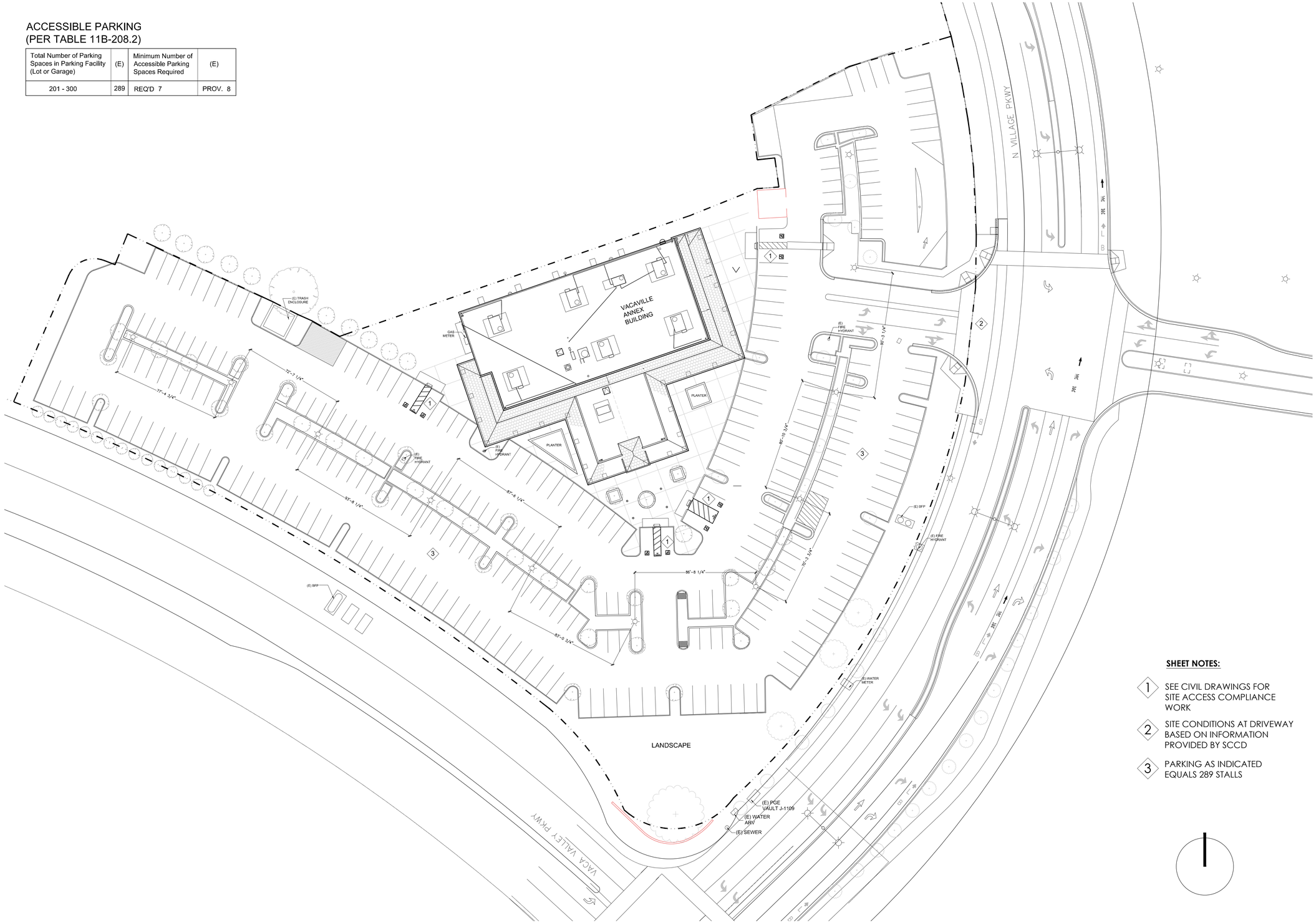

SHEET NOTES:

1. SEE CIVIL DRAWINGS FOR SITE ACCESS COMPLIANCE WORK
2. SITE CONDITIONS AT DRIVEWAY BASED ON INFORMATION PROVIDED BY SCCD
3. PARKING AS INDICATED EQUALS 289 STALLS

OWNER:

Solano Community College District
2000 North Village Parkway
Vacaville, CA 95688

ARCHITECT:

CA ARCHITECTS
475 Gate Five Road, Suite 107
Sausalito, CA 94965
T 415.331.7655
F 415.331.7656

PROJECT:

Vacaville Classroom Building
(Annex) Renovation Project

CONSULTANT TEAM:

STAMP

LICENSED ARCHITECT
JOSHUA COHN
C 23410
REN. 11-30-17
STATE OF CALIFORNIA

SHEET LEGEND:

ISSUE/REVISION:

NO:	DATE:	DESCRIPTION:
	04/25/2017	ISSUE FOR DD 100%
	06/06/2017	ISSUE FOR CD 50%
	06/30/2017	ISSUE FOR CD 60%
	07/20/2017	ISSUE FOR CD 100%
	10/18/2017	DSA BACKCHECK

KEY PLAN:

FILE: 48-C1
IDENTIFICATION STAMP
DIVISION OF THE STATE ARCHITECT
02-116082
AC ICC FLS GBC SS PVL
DATE: 10/31/2017

SCALE:
DATE:
PROJECT NO:
PERMIT APPLICATION NO.:

SITE PLAN

AS1.00

10 SITE PLAN

SCALE: 1/32" = 1' - 0"

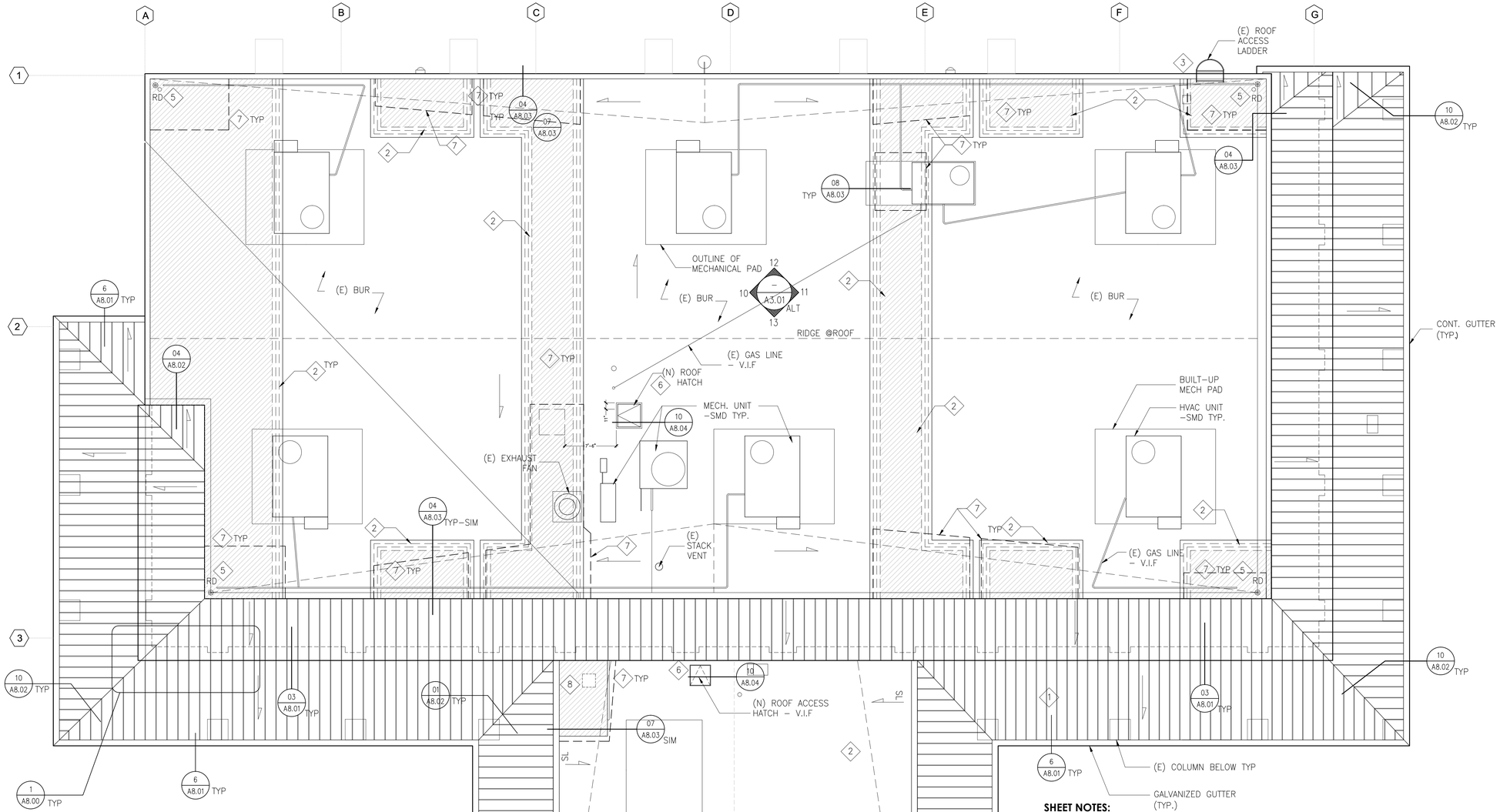

GENERAL NOTES:

ALL ROOFING ASSEMBLIES SHALL BE REQUIRED TO BE A CLASS "A" ROOF ASSEMBLY AND TESTED IN ACCORDANCE WITH ASTM 108 OR UL 790 AND COMPLY WITH THE REQUIRMENTS IN CBC 1505 (TYP).

FOR SHEET NOTE #3: BEFORE REATTACHING PARAPET PORTION OF (E) LADDER, CLEAN OUT (E) HOLES, USE WEDGE ANCHORS 1/2" DIA MIN, INSTALL PER S0.1 DETAILS FOR USE/LOAD (TYP).

TABLE 1.10-2
Chart of minimum Fastener & Clip Spacing

System	Fasteners[2,3] Per Clip/Slots	Clip Spacing		
		Roof Height	Field	Perimeters & Corners[1]
UC-3 (5 to 20 yrs)	2	0 to 50' (0 to 15.2 m)	36" o.c. (914 mm)	12" o.c. (305 mm)
		51' to 75' (15.5 to 22.8 m)	24" o.c. (610 mm)	12" o.c. (305 mm)
		76' to 120' (23.1 to 36.6 m)	16" o.c. (305 mm)	12" o.c. (305 mm)
		121' to 250' (36.9 to 76.2 m)	12" o.c. (305 mm)	6" o.c. (152 mm)
UC-4 (5 to 20 yrs)	1	0 to 75' (0 to 22.8 m)	24" o.c. (610 mm)	12" o.c. (305 mm)
		76' to 120' (23.1 to 36.6 m)	16" o.c. (406 mm)	12" o.c. (305 mm)
	2 Consecutive Slots	121' to 250' (36.9 to 76.2 m)	12" o.c. (305 mm)	6" o.c. (152 mm)

SHEET NOTES:

1. INSTALL (N) STANDING SEAM METAL ROOF OVER PROPERLY PREPARED SUBSTRATE PER MANF'RS RECOMMENDATIONS, REMOVE (E) COPING AND PREP/INSTALL FOR NEW COPING/FLASHING AS REQ'D, SEE 01/A8.01 & 04/A8.02 FOR ADD'L DETAILS (TYP)
2. COORDINATE STRUCTURAL/MEP WORK, PROPERLY PATCH PREPARED SUBSTRATE AS INDICATED WITH BUR, USE MATRIX 307 PRIMER FOR TIE IN TO EXISTING ROOF, NAIL # 75 BASE TO (E) WOOD DECK (REPLACE DAMAGED SUBSTRATE AS REQ'D), MOP 2 PLIES OF PLY 6 PLY SHEET WITH TYPE III ASPHALT. MOP STANDARD CAP SHEET WITH TYPE III ASPHALT, LAP EACH SUBSEQUENT LAYER +6" OVER ALL SIDES (TYP), SEE DOCUEMENTS FOR ADD'L INFO.
3. REINSTALL PARAPET PORTION OF (E) ROOF LADDER AS REQ'D FOR USE, SEE GEN NOTES AND INSTALL PER CCR TITLE 8, SEC 3277(TYP).
4. SEE DETAILS FOR EXISTING ROOF AT T.O.EQUIPMENT PAD AND PARAPET TO TIE INTO NEW BUR, REPLACE DAMAGED PARAPET SHEET/SHINGLES (TYP)
5. REPLACE (E) ROOF DRAINS/OVERFLOW, SEE 11/A8.02 (TYP) - SPD
6. INSTALL (N) EXTERIOR ROOF ACCESS HATCH, COORDINATE WITH ACCESS LADDER BELOW.
7. DASHED LINES INDICATE PORTIONS OF CRICKETS AND EQUIPMENT PADS THAT REQUIRE NEW WORK TO MATCH/CONFORM EXISTING TO ALLOW FOR PROPER DRAINAGE AND EQUIPMENT SUPPORT (TYP).
8. REINSTALL/INSTALL (N) EXHAUST FAN, REINSTALLATION OF EQUIPMENT NOT INDICATED ON EXISTING PAD, USE 10/A8.03 U.O.N. - TYP - SMD

10 PROPOSED ROOF PLAN

SCALE: 1/8" = 1' - 0"

OWNER:

Solano Community College District
2000 North Village Parkway
Vacaville, CA 95688

ARCHITECT:

CA ARCHITECTS
475 Gate Five Road, Suite 107
Sausalito, CA 94965
T 415.331.7655
F 415.331.7656

PROJECT:

Vacaville Classroom Building (Annex) Renovation Project

CONSULTANT TEAM:

STAMP

LICENSED ARCHITECT JOSHUA COHN C 23410 REN. 11-30-17 STATE OF CALIFORNIA

SHEET LEGEND:

ISSUE/REVISION:

NO:	DATE:	DESCRIPTION:
	04/25/2017	ISSUE FOR DD 100%
	06/06/2017	ISSUE FOR CD 50%
	06/30/2017	ISSUE FOR CD 60%
	07/20/2017	ISSUE FOR CD 100%
	10/18/2017	DSA BACKCHECK

KEY PLAN:

FILE: 48-C1
IDENTIFICATION STAMP
DIVISION OF THE STATE ARCHITECT
02-116082
AC JCC FLS GBC SSPVL
DATE: 10/31/2017

SCALE:
DATE:
PROJECT NO:
PERMIT APPLICATION NO.:

ROOF PLAN

A1.01

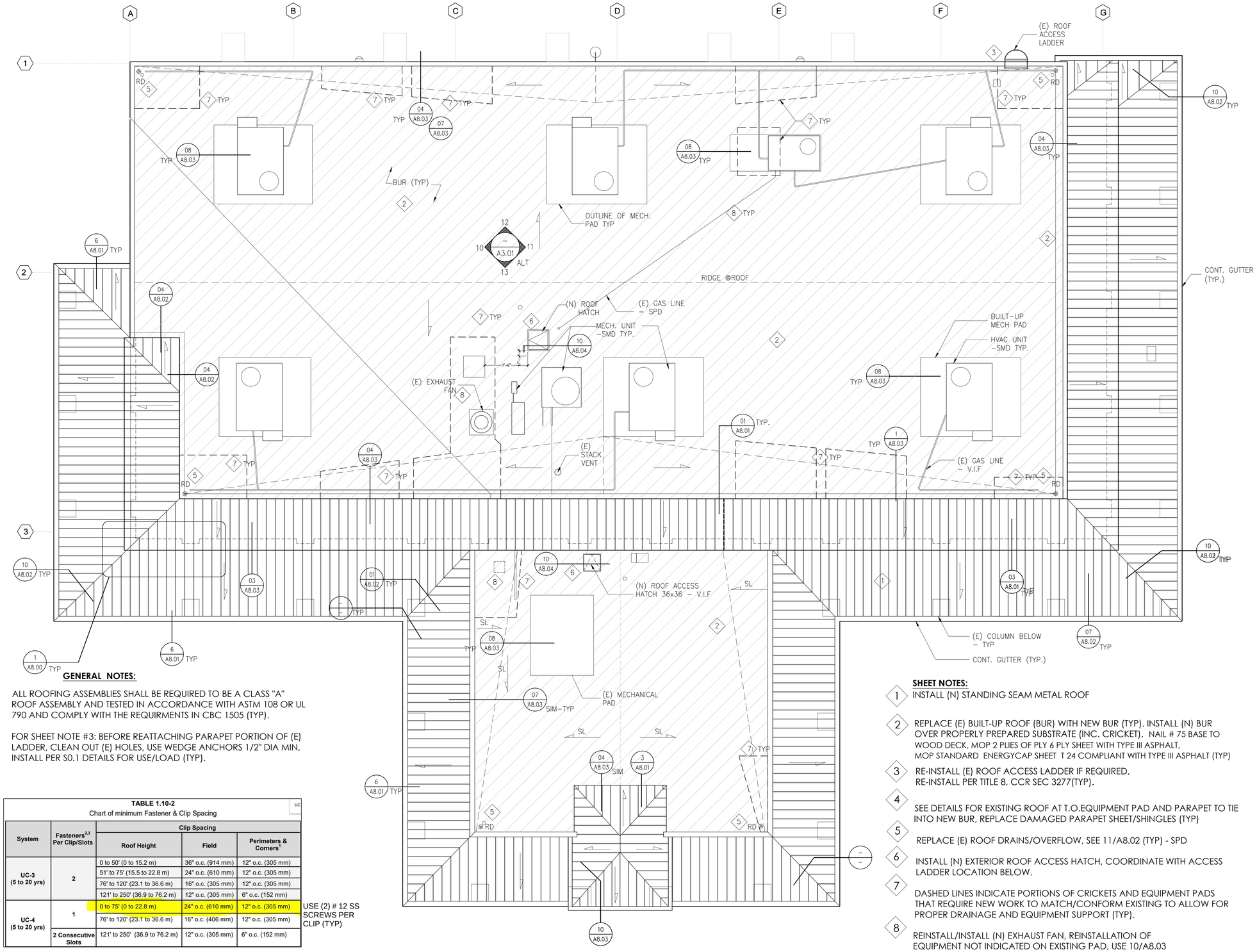

GENERAL NOTES:

ALL ROOFING ASSEMBLIES SHALL BE REQUIRED TO BE A CLASS "A" ROOF ASSEMBLY AND TESTED IN ACCORDANCE WITH ASTM 108 OR UL 790 AND COMPLY WITH THE REQUIRMENTS IN CBC 1505 (TYP).

FOR SHEET NOTE #3: BEFORE REATTACHING PARAPET PORTION OF (E) LADDER, CLEAN OUT (E) HOLES, USE WEDGE ANCHORS 1/2" DIA MIN, INSTALL PER S0.1 DETAILS FOR USE/LOAD (TYP).

TABLE 1.10-2
Chart of minimum Fastener & Clip Spacing

System	Fasteners[2,3] Per Clip/Slots	Clip Spacing		
		Roof Height	Field	Perimeters & Corners[1]
UC-3 (5 to 20 yrs)	2	0 to 50' (0 to 15.2 m)	36" o.c. (914 mm)	12" o.c. (305 mm)
		51' to 75' (15.5 to 22.8 m)	24" o.c. (610 mm)	12" o.c. (305 mm)
		76' to 120' (23.1 to 36.6 m)	16" o.c. (305 mm)	12" o.c. (305 mm)
		121' to 250' (36.9 to 76.2 m)	12" o.c. (305 mm)	6" o.c. (152 mm)
UC-4 (5 to 20 yrs)	1	0 to 75' (0 to 22.8 m)	24" o.c. (610 mm)	12" o.c. (305 mm)
		76' to 120' (23.1 to 36.6 m)	16" o.c. (406 mm)	12" o.c. (305 mm)
	2 Consecutive Slots	121' to 250' (36.9 to 76.2 m)	12" o.c. (305 mm)	6" o.c. (152 mm)

USE (2) # 12 SS SCREWS PER CLIP (TYP)

SHEET NOTES:

1. INSTALL (N) STANDING SEAM METAL ROOF
2. REPLACE (E) BUILT-UP ROOF (BUR) WITH NEW BUR (TYP). INSTALL (N) BUR OVER PROPERLY PREPARED SUBSTRATE (INC. CRICKET). NAIL # 75 BASE TO WOOD DECK, MOP 2 PLIES OF PLY 6 PLY SHEET WITH TYPE III ASPHALT, MOP STANDARD ENERGYCAP SHEET T 24 COMPLIANT WITH TYPE III ASPHALT (TYP)
3. RE-INSTALL (E) ROOF ACCESS LADDER IF REQUIRED, RE-INSTALL PER TITLE 8, CCR SEC 3277(TYP).
4. SEE DETAILS FOR EXISTING ROOF AT T.O.EQUIPMENT PAD AND PARAPET TO TIE INTO NEW BUR, REPLACE DAMAGED PARAPET SHEET/SHINGLES (TYP)
5. REPLACE (E) ROOF DRAINS/OVERFLOW, SEE 11/A8.02 (TYP) - SPD
6. INSTALL (N) EXTERIOR ROOF ACCESS HATCH, COORDINATE WITH ACCESS LADDER LOCATION BELOW.
7. DASHED LINES INDICATE PORTIONS OF CRICKETS AND EQUIPMENT PADS THAT REQUIRE NEW WORK TO MATCH/CONFORM EXISTING TO ALLOW FOR PROPER DRAINAGE AND EQUIPMENT SUPPORT (TYP).
8. REINSTALL/INSTALL (N) EXHAUST FAN, REINSTALLATION OF EQUIPMENT NOT INDICATED ON EXISTING PAD, USE 10/A8.03 U.O.N. - TYP - SMD

10 PROPOSED ROOF PLAN - ADDITIVE ALTERNATE

SCALE: 1/8" = 1' - 0"

OWNER:

Solano Community College District
2000 North Village Parkway
Vacaville, CA 95688

ARCHITECT:

CA ARCHITECTS
475 Gate Five Road, Suite 107
Sausalito, CA 94965
T 415.331.7655
F 415.331.7656

PROJECT:

Vacaville Classroom Building (Annex) Renovation Project

CONSULTANT TEAM:

STAMP

LICENSED ARCHITECT JOSHUA COHN C 23410 REN. 11-30-17 STATE OF CALIFORNIA

SHEET LEGEND:

ISSUE/REVISION:

NO:	DATE:	DESCRIPTION:
	04/25/2017	ISSUE FOR DD 100%
	06/06/2017	ISSUE FOR CD 50%
	06/30/2017	ISSUE FOR CD 60%
	07/20/2017	ISSUE FOR CD 100%
	10/18/2017	DSA BACKCHECK

KEY PLAN:

FILE: 48-C1
IDENTIFICATION STAMP
DIVISION OF THE STATE ARCHITECT
02-116082
AC ICC FLS GBC SSPVL
DATE: 10/31/2017

SCALE:
DATE:
PROJECT NO:
PERMIT APPLICATION NO.:

ROOF PLAN

A1.01 ALT

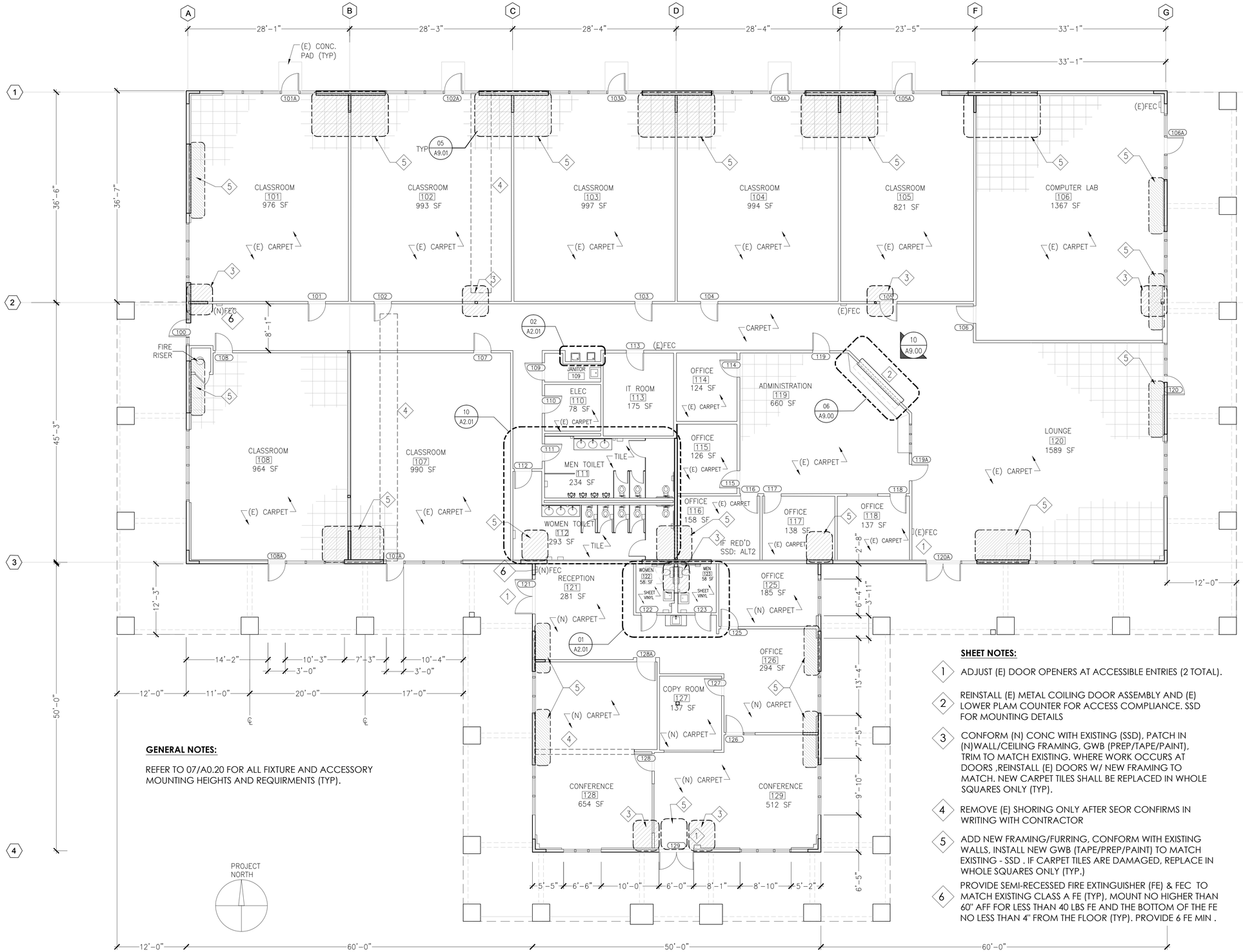

GENERAL NOTES:

REFER TO 07/A0.20 FOR ALL FIXTURE AND ACCESSORY MOUNTING HEIGHTS AND REQUIRMENTS (TYP).

SHEET NOTES:

1. ADJUST (E) DOOR OPENERS AT ACCESSIBLE ENTRIES (2 TOTAL).
2. REINSTALL (E) METAL COILING DOOR ASSEMBLY AND (E) LOWER PLAM COUNTER FOR ACCESS COMPLIANCE. SSD FOR MOUNTING DETAILS
3. CONFORM (N) CONC WITH EXISTING (SSD), PATCH IN (N)WALL/CEILING FRAMING, GWB (PREP/TAPE/PAINT), TRIM TO MATCH EXISTING. WHERE WORK OCCURS AT DOORS ,REINSTALL (E) DOORS W/ NEW FRAMING TO MATCH. NEW CARPET TILES SHALL BE REPLACED IN WHOLE SQUARES ONLY (TYP).
4. REMOVE (E) SHORING ONLY AFTER SEOR CONFIRMS IN WRITING WITH CONTRACTOR
5. ADD NEW FRAMING/FURRING, CONFORM WITH EXISTING WALLS, INSTALL NEW GWB (TAPE/PREP/PAINT) TO MATCH EXISTING - SSD . IF CARPET TILES ARE DAMAGED, REPLACE IN WHOLE SQUARES ONLY (TYP.)
6. PROVIDE SEMI-RECESSED FIRE EXTINGUISHER (FE) & FEC TO MATCH EXISTING CLASS A FE (TYP), MOUNT NO HIGHER THAN 60" AFF FOR LESS THAN 40 LBS FE AND THE BOTTOM OF THE FE NO LESS THAN 4" FROM THE FLOOR (TYP). PROVIDE 6 FE MIN .

10 FLOOR PLAN

SCALE: 1/8" = 1' - 0"

OWNER:

Solano Community College Distric
2000 North Village Parkway
Vacaville, CA 95688

ARCHITECT:

CA ARCHITECTS
475 Gate Five Road, Suite 107
Sausalito, CA 94965
T 415.331.7655
F 415.331.7656

PROJECT:

Vacaville Classroom Building (Annex) Renovation Project

CONSULTANT TEAM:

STAMP

LICENSED ARCHITECT JOSHUA COHN C 23410 REN. 11-30-17 STATE OF CALIFORNIA

SHEET LEGEND:

ISSUE/REVISION:

NO:	DATE:	DESCRIPTION:
	04/25/2017	ISSUE FOR DD 100%
	06/06/2017	ISSUE FOR CD 50%
	06/30/2017	ISSUE FOR CD 60%
	07/20/2017	ISSUE FOR CD 100%
	10/18/2017	DSA BACKCHECK

KEY PLAN:

FILE: 48-C1
IDENTIFICATION STAMP
DIVISION OF THE STATE ARCHITECT
02-116082
AC ICC FLS GBC SS PVL
DATE: 10/31/2017

DATE:
PROJECT NO:
PERMIT APPLICATION NO.:

FLOOR PLAN

A2.00

SHEET NOTES:

1. INSTALL ACCESSIBLE SINK CABINET, ADA ACCESSIBLE COUNTER, SINK AND FAUCET (SPD, PREP AND PAINT WALL AND BASEBOARD TRIM TO MATCH EXISTING (TYP).
2. RE-SPACE AND RE-INSTALL (2) DRINKING FOUNTAINS B & C - SEE 02/D2.01 AND 02/A2.01, PROVIDE ALL NECESSARY BACKING REQUIRED TO RE-HANG (E) DRINKING FOUNTAIN (TYP). RE-FRAME AND ADD (N) GWB TO MATCH (E), TAPE AND PAINT TO MATCH (TYP).
3. PROVIDE (N) CONCRETE SLAB WITH WP. BELOW, DOWEL (SEE SSD) AND CONFORM TO ALLOW (N) TILE TO ALIGN WITH EXISTING ADJACENT FLOOR. NEW TILE/GROUNT TO MATCH (E) TYP.
4. MOVE AND REINSTALL ALL ACCESSORIES/GRAB BARS, MIRRORS, PROVIDE ADEQUATE BACKING FOR ALL WALL MTD. WORK TYP. USE BACKING FOR MED. LOADS (MIN) 04/A9.01 WITH 3-#10 SCREWS MIN AT ENDS TO SUPPORT MIN LOAD OF 250LBS.
5. REINSTALL TWO (2) EXISTING TOILETS (SPD), AND ALL ADJACENT ACCESSORIES, GRAB BARS, CARRIERS, WASTE LINES, WATER SUPPLY LINES TO NEW LOCATION AS SHOWN FOR ACCESS COMPLIANCE. INSTALL NEW WALL FRAMING/GWB, TILE WALL/FLOOR (TO MATCH EXISTING), PROVIDE BACKING AS REQ'D TO RE-ATTACH EXISTING ACCESSORIES AND GRAB-BARS (TYP.).
6. REHANG (E) MIRRORS TO BE HEIGHT COMPLIANT SEE A5.01.
7. MOVE TOTAL OF 5 (FIVE) ACCESSORIES TO BE COMPLIANT. - SEE A5.01
8. PARTITION DOOR AT WOMEN RESTROOM 112 TO BE MOVED 4" DOWN TO PROVIDE 18" CLEAR SPACE AT OPENING, RE-HAND (E) DOOR TO ALLOW IN-SWING, PROVIDE DOOR HARDWARE TO ALLOW AS REQ'D.
9. PROVIDE CARPET TILES AND BASE TRIM AS REQUIRED. REINSTALL ALL WALL ACCESSORIES AS REQ'D, PREP/PAINT (N) WALL/TRIM TO MATCH EXISTING. ONLY REPLACE CARPET TILES IN WHOLE SQUARES ONLY (TYP).
10. INSTALL (N) ROOF ACCESS HATCH AT ROOM ABOVE 122, SEE 10/A8.03.
11. CONFORM NEW CONC SLAB WITH EXISTING, ADD DOWELS/WATERPROOFING AS REQ'D (SSD), PATCH IN AND WELD SEAMS AT NEW SHEET VINYL TO MATCH EXISTING AT FLOOR AND COVE BASE (TYP.) INSTALL NEW FRAMING GWB (COMPLIANT WITH TOILET ROOM) AND PATCH/PREP/PAINT TO MATCH EXISTING. REINSTALL ALL ACCESSORIES FOR COMPLIANCE FOR ACCESS (WITH BACKING) AND REINSTALL (E) TOILETS tYP.).

GENERAL NOTE: REFER TO 07/A0.20 FOR ALL FIXTURE AND ACCESSORY MOUNTING HEIGHTS AND REQUIRMENTS (TYP).

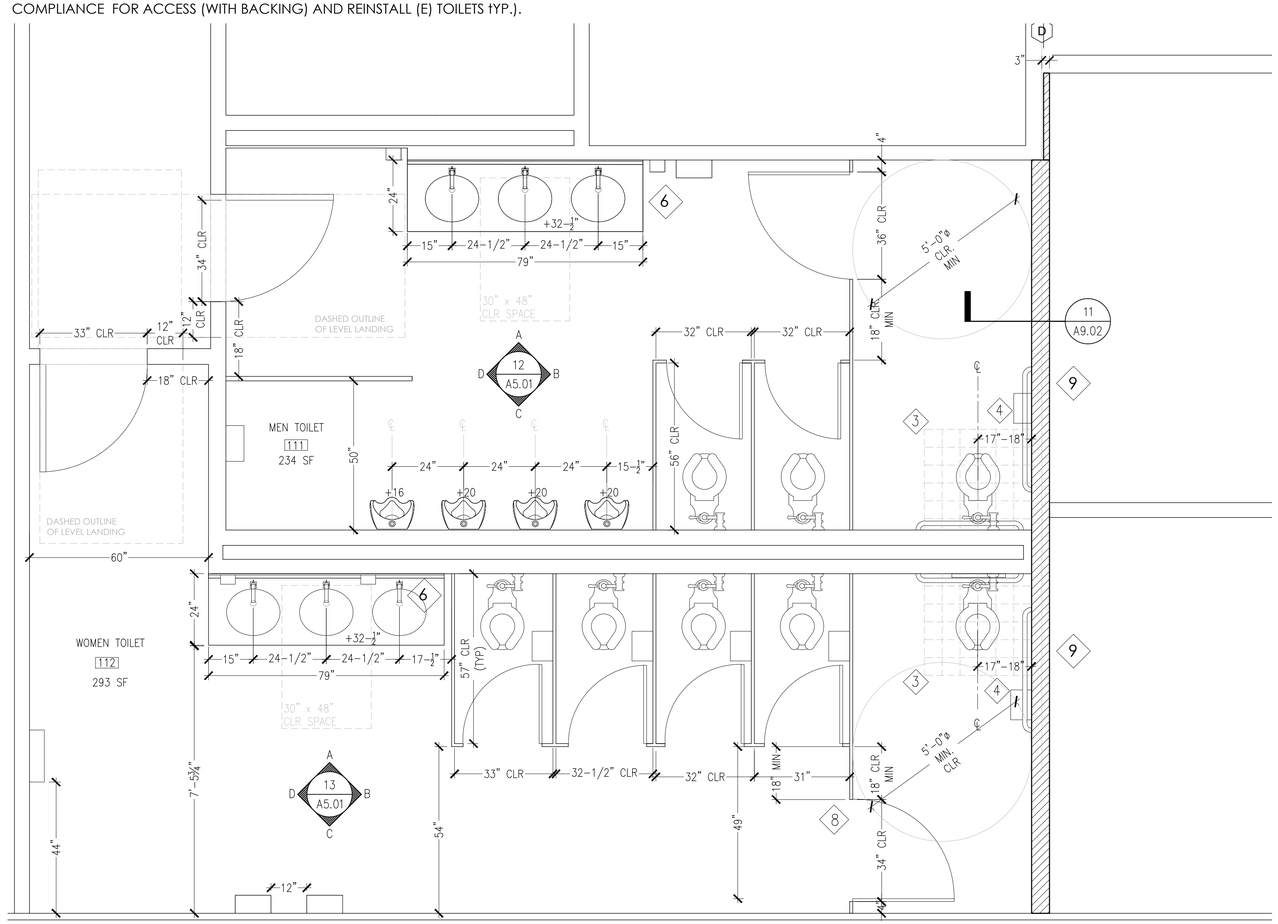

10 TOILET ROOMS 111 & 112

SCALE: 1/2" = 1' - 0"

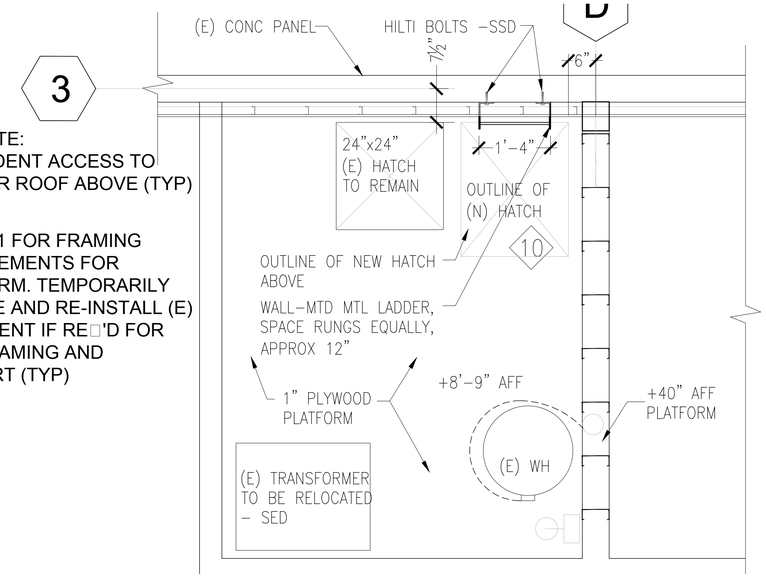

GEN NOTE:
NO STUDENT ACCESS TO ATTIC OR ROOF ABOVE (TYP)

SEE S2.1 FOR FRAMING RE□UIREMENTS FOR PLATFORM. TEMPORARILY REMOVE AND RE-INSTALL (E) E□UIPMENT IF RE□'D FOR NEW FRAMING AND SUPPORT (TYP)

03 PLENUM PLATFORM ABOVE BATHROOM

SCALE: 3/4" = 1' - 0"

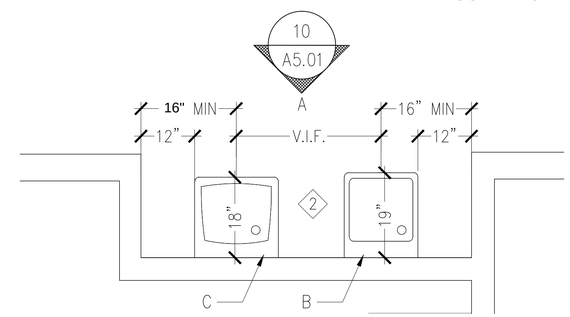

02 EXISTING DRINKING FOUNTAINS

SCALE: 3/4" = 1' - 0"

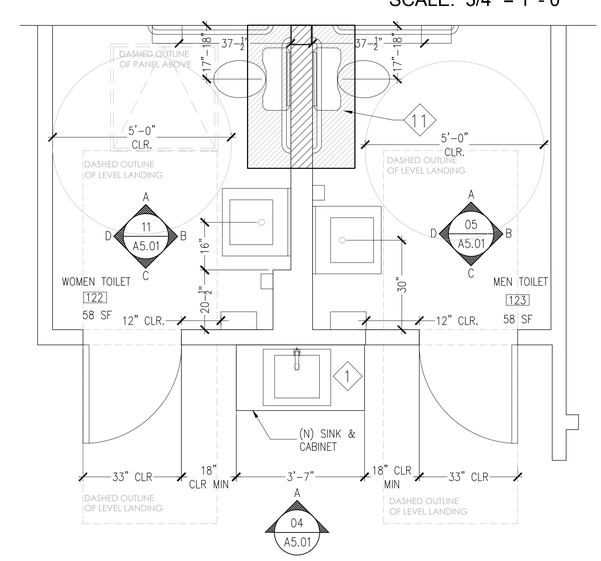

01 TOILET ROOMS 122 & 123 - ADMIN AREA

SCALE: 1/2" = 1' - 0"

OWNER:

Solano Community College District
2000 North Village Parkway
Vacaville, CA 95688

ARCHITECT:

CA ARCHITECTS
475 Gate Five Road, Suite 107
Sausalito, CA 94965
T 415.331.7655
F 415.331.7656

PROJECT:

Vacaville Classroom Building (Annex) Renovation Project

CONSULTANT TEAM:

STAMP

LICENSED ARCHITECT JOSHUA COHN C 23410 REN. 11-30-17 STATE OF CALIFORNIA

SHEET LEGEND:

ISSUE/REVISION:

NO:	DATE:	DESCRIPTION:
	04/25/2017	ISSUE FOR DD 100%
	06/06/2017	ISSUE FOR CD 50%
	06/30/2017	ISSUE FOR CD 60%
	07/20/2017	ISSUE FOR CD 100%
	10/18/2017	DSA BACKCHECK

KEY PLAN:

FILE: 48-C1
IDENTIFICATION STAMP
DIVISION OF THE STATE ARCHITECT
02-116082
AC ICC FLS GBC SSPVL
DATE: 10/31/2017

SCALE:
DATE:
PROJECT NO:
PERMIT APPLICATION NO.:

ENLARGED PLANS TOILET ROOMS & DRINKING FOUNTAINS

A2.01

13 EXISTING NORTH ELEVATIONS

SCALE: 1/8" = 1' - 0"

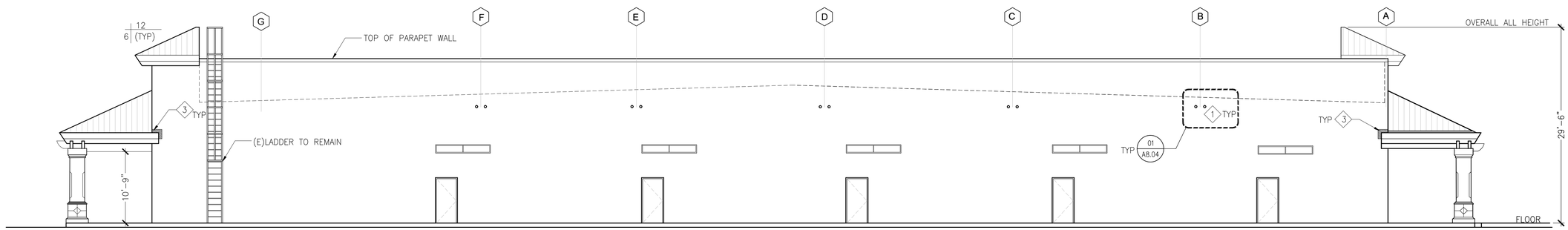

12 EXISTING SOUTH ELEVATIONS

SCALE: 1/8" = 1' - 0"

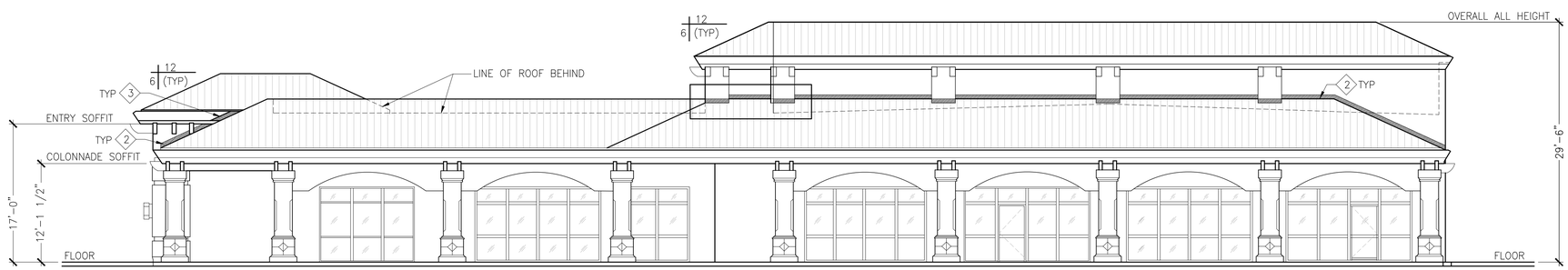

11 EXISTING WEST ELEVATIONS

SCALE: 1/8" = 1' - 0"

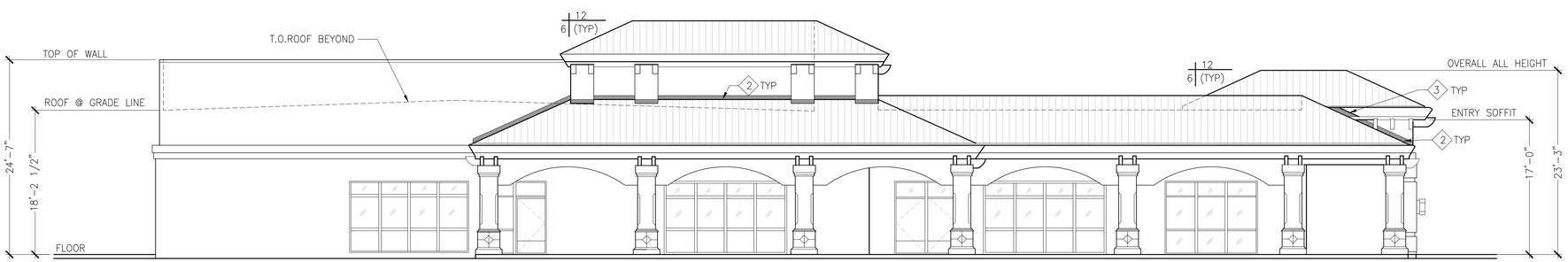

10 EXISTING EAST ELEVATIONS

SCALE: 1/8" = 1' - 0"

SHEET NOTES:

1. (N) BOLT CONNECTIONS AT CONCRETE PANEL - SEE 1/A8.04 - SSD
2. NEW FLASHING/CEMENT PLASTER/WATERPROOFING AS REQ'D TO INSTALL NEW ROOF-SEE 4/A8.01 (TYP.)
3. WHERE METAL ROOF TERMINATES INTO (E) WALL, PROVIDE APPROPRIATE FLASHING/COUNTERFLASHING AS REQ'D PER MFR'S RECOMMENDATIONS (TYP).

GENERAL NOTES:

ALL ROOFING ASSEMBLIES SHALL BE REQUIRED TO BE A CLASS "A" ROOF ASSEMBLY AND TESTED IN ACCORDANCE WITH ASTM 108 OR UL 790 AND COMPLY WITH THE REQUIRMENTS IN CBC 1505 (TYP).

OWNER:

Solano Community College Distric
2000 North Village Parkway
Vacaville, CA 95688

ARCHITECT:

CA ARCHITECTS
475 Gate Five Road, Suite 107
Sausalito, CA 94965
T 415.331.7655
F 415.331.7656

PROJECT:

Vacaville Classroom Building (Annex) Renovation Project

CONSULTANT TEAM:

STAMP

SHEET LEGEND:

ISSUE/REVISION:

NO:	DATE:	DESCRIPTION:
	04/25/2017	ISSUE FOR DD 100%
	06/06/2017	ISSUE FOR CD 50%
	06/30/2017	ISSUE FOR CD 60%
	07/20/2017	ISSUE FOR CD 100%
	10/18/2017	DSA BACKCHECK

KEY PLAN:

FILE: 48-C1
IDENTIFICATION STAMP
DIVISION OF THE STATE ARCHITECT
02-116082
AC TCC FLS GBC SS PVL
DATE: 10/31/2017

DATE:
PROJECT NO:
PERMIT APPLICATION NO.:

EXTERIOR ELEVATIONS

A3.00

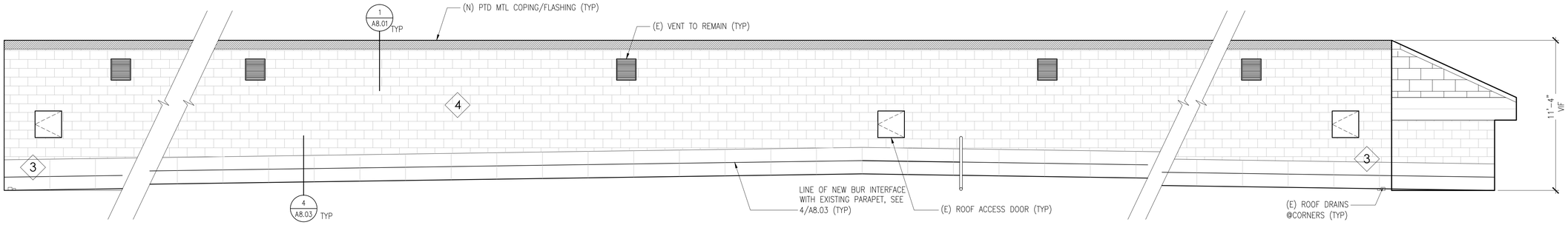

13 EXISTING NORTH ROOF ELEVATIONS

SCALE: 1/4" = 1' - 0"

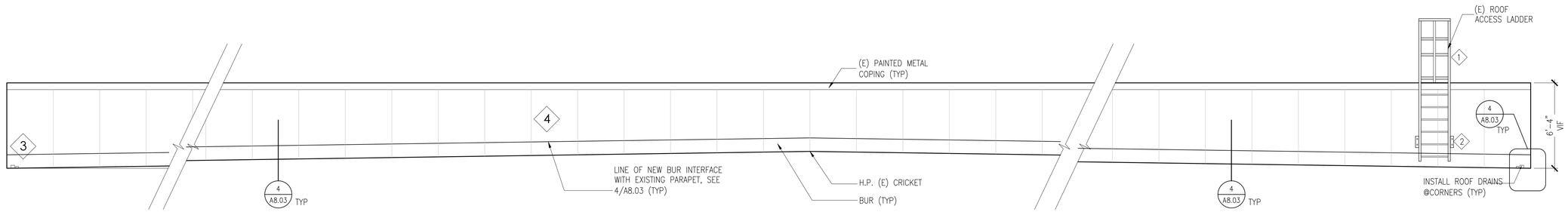

12 EXISTING SOUTH ROOF ELEVATIONS

SCALE: 1/8" = 1' - 0"

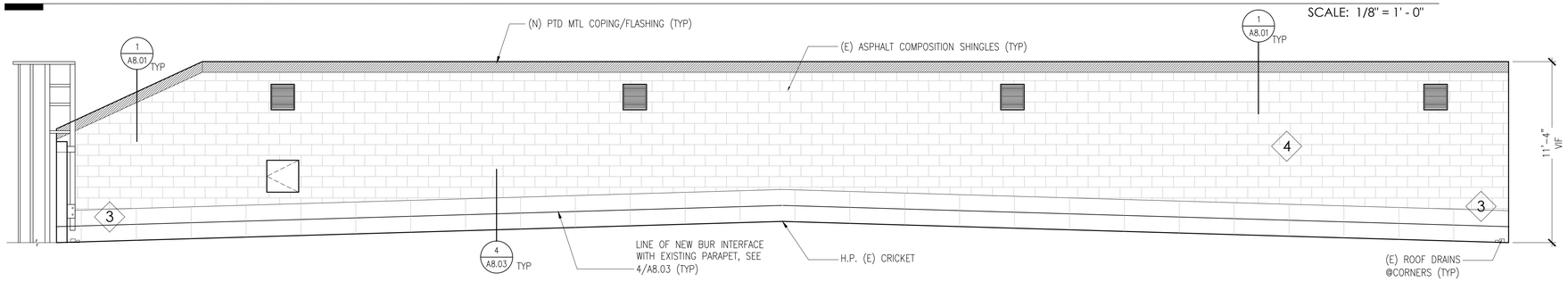

11 EXISTING EAST ROOF ELEVATIONS

SCALE: 1/4" = 1' - 0"

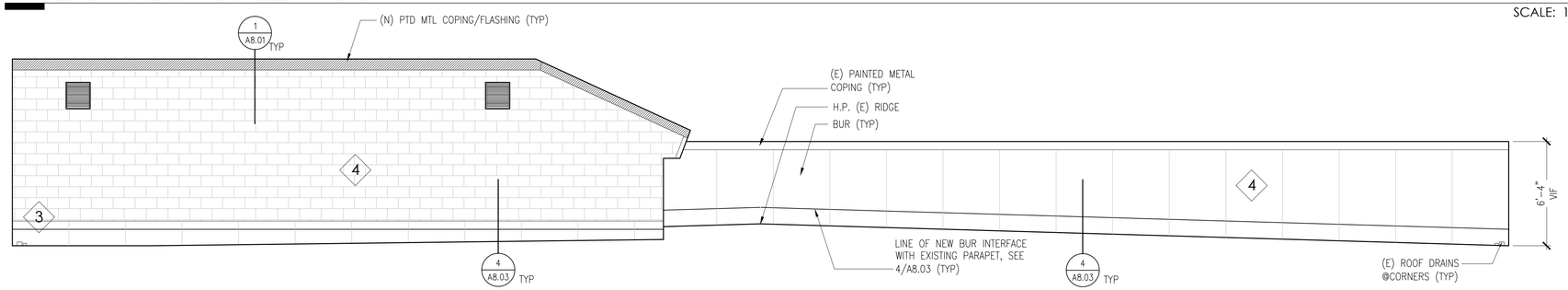

10 EXISTING WEST ROOF ELEVATIONS

SCALE: 1/8" = 1' - 0"

SCALE: 1/4" = 1' - 0"

SHEET NOTES:

1. (E) ROOF LADDER ATTACHMENTS - REMOVE AND RE-INSTALL AS REQ'D TO RE-ROOF PARAPET, SEE NOTE #3/A1.01
2. REMOVE COPING AND PREP FOR NEW METAL ROOF AS SHOWN. NEW COPING AND RELATED FLASHING IS REQUIRED FOR NEW METAL ROOF AND SHALL BE INCLUDED IN BASE BID, SEE 01/A8.01FOR TYPICAL SCOPE.
3. REMOVE (E) ROOF DRAINS AND INSTALL NEW DRAINS - SPD (TYP.)
4. EXISTING PARAPET WATERPROOFING TO REMAIN EXCPET IN AREAS AS NOTED. INSPECT AND PATCH AREAS OF EXISTING PARAPET THAT APPEAR TO REQUIRE REPAIR (TYP)

GENERAL NOTES:

ALL ROOFING ASSEMBLIES SHALL BE REQUIRED TO BE A CLASS "A" ROOF ASSEMBLY AND TESTED IN ACCORDANCE WITH ASTM 108 OR UL 790 AND COMPLY WITH THE REQUIRMENTS IN CBC 1505 (TYP).

OWNER:

Solano Community College Distric
2000 North Village Parkway
Vacaville, CA 95688

ARCHITECT:

CA ARCHITECTS
475 Gate Five Road, Suite 107
Sausalito, CA 94965
T 415.331.7655
F 415.331.7656

PROJECT:

Vacaville Classroom Building
(Annex) Renovation Project

CONSULTANT TEAM:

STAMP

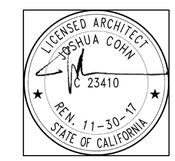

SHEET LEGEND:

ISSUE/REVISION:

NO:	DATE:	DESCRIPTION:
	04/25/2017	ISSUE FOR DD 100%
	06/06/2017	ISSUE FOR CD 50%
	06/30/2017	ISSUE FOR CD 60%
	07/20/2017	ISSUE FOR CD 100%
	10/18/2017	DSA BACKCHECK

KEY PLAN:

FILE: 48-C1
IDENTIFICATION STAMP
DIVISION OF THE STATE ARCHITECT
02-116082
AC TCC FLS GBC SSPVL
DATE: 10/31/2017

DATE:
PROJECT NO:
PERMIT APPLICATION NO.:

PARAPET ELEVATIONS

A3.01ALT

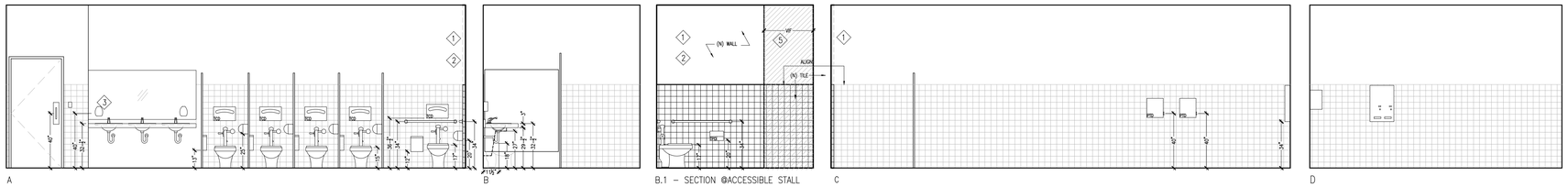

13 PROPOSED ELEVATIONS - WOMEN'S RESTROOM 112

SCALE: 3/8" = 1' - 0"

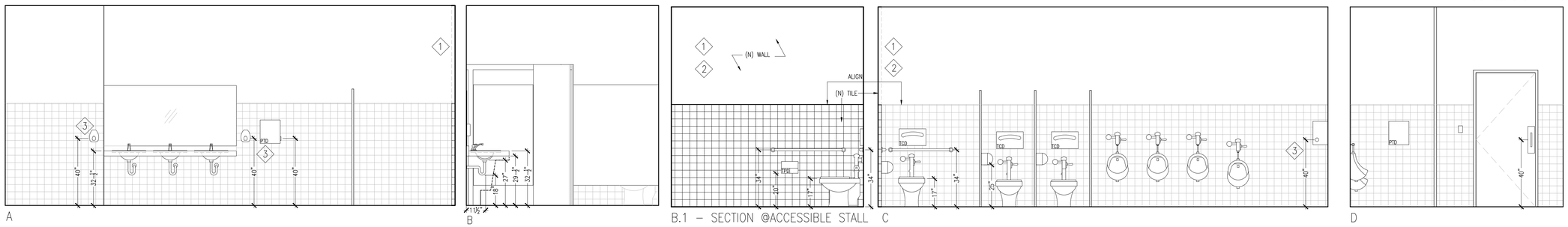

12 PROPOSED ELEVATIONS - MEN'S RESTROOM 111

SCALE: 3/8" = 1' - 0"

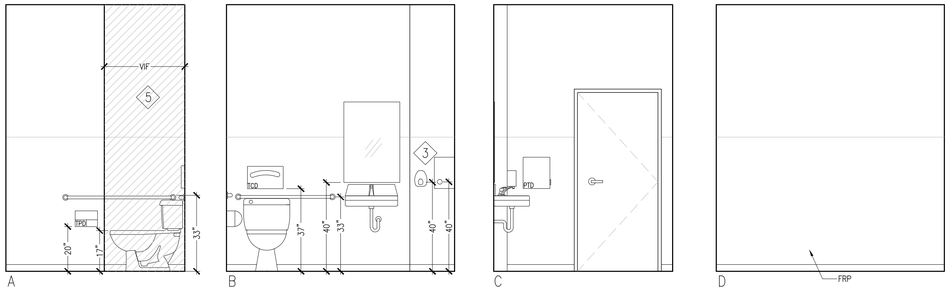

11 PROPOSED ELEVATIONS - ADMIN UNISEX RESTROOM122

SCALE: 3/8" = 1' - 0"

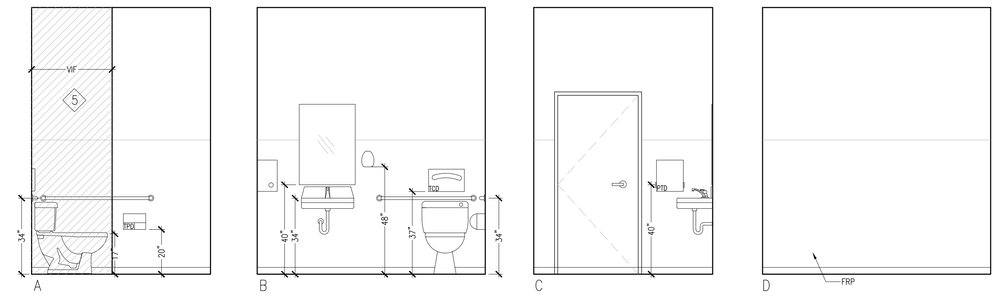

05 PROPOSED ELEVATIONS - ADMIN UNISEX RESTROOM 123

SCALE: 3/8" = 1' - 0"

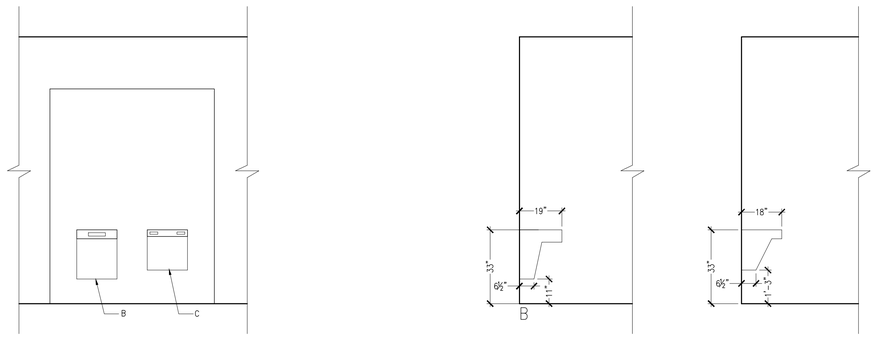

10 PROPOSED ELEVATIONS - DRINKING FOUNTAINS

SCALE: 3/8" = 1' - 0"

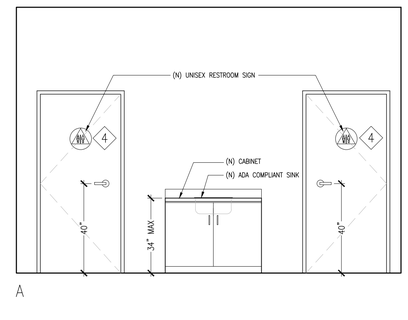

04 PROPOSED - ADMIN SINK 121

SCALE: 3/8" = 1' - 0"

SHEET NOTES:

1. PROVIDE (N) GWB/TILE (TO MATCH) EXISTING PAINT & TILE (TYP).
2. PROVIDE (N) BACKING IN WALLS SUFFICIENT TO RE-LOCATE (E) ACCESSORIES & GRAB BARS (TYP).
3. ADJUST HEIGHT OF ACCESSORIES TO COMPLY WITH REQUIRED ADA HEIGTHS.
4. PROVIDE AND INSTALL (N) UNISEX RESTROOM SIGNS.
5. NEW AREA OF WALL TO BE REBUILT, CONTRACTOR SHALL ACCOUNT FOR EXTENT OF SCOPE BASED ON DEMO SCOPE. CONTRACTOR SHALL REPLACE/REINSTALL ANY DEVICES, FIXTURES AND ACCESSORIES ON BOTH SIDES OF THE WALLS. ALL FINISHES, MATERIALS AND COLORS SHALL MATCH EXISTING ON BOTHS SIDESOF THE WALLS (TYP).
6. GENERAL NOTE: SEE 07/A0.20 FOR ADD'D ACCESS COMPLIANCE INFORMATION AS REQ'D FOR SCOPE SHOWN (TYP)

OWNER:

Solano Community College District
2000 North Village Parkway
Vacaville, CA 95688

ARCHITECT:

CA ARCHITECTS
475 Gate Five Road, Suite 107
Sausalito, CA 94965
T 415.331.7655
F 415.331.7656

PROJECT:

Vacaville Classroom Building
(Annex) Renovation Project

CONSULTANT TEAM:

STAMP

LICENSED ARCHITECT JOSHUA COHN C-18 3410 REN. 11-30-17 STATE OF CALIFORNIA

SHEET LEGEND:

ISSUE/REVISION:

NO:	DATE:	DESCRIPTION:
	04/25/2017	ISSUE FOR DD 100%
	06/06/2017	ISSUE FOR CD 50%
	06/30/2017	ISSUE FOR CD 60%
	07/20/2017	ISSUE FOR CD 100%

KEY PLAN:

FILE: 48-C1
IDENTIFICATION STAMP
DIVISION OF THE STATE ARCHITECT
02-116082
AC JCC FLS GBC SS PVL
DATE: 10/31/2017

SCALE:
DATE:
PROJECT NO:
PERMIT APPLICATION NO.:

PROPOSED ELEVATIONS

A5.01

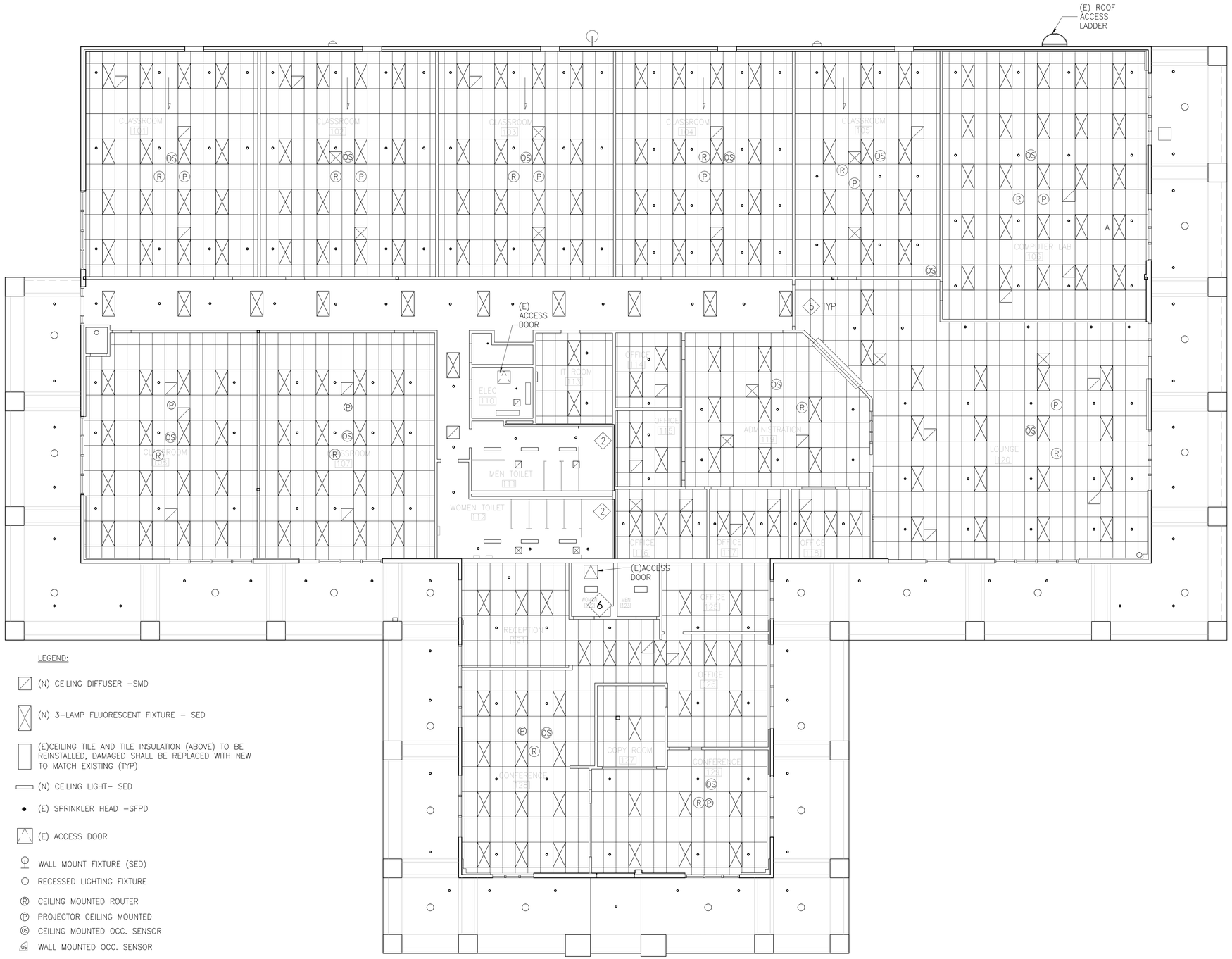

LEGEND:

- (N) CEILING DIFFUSER –SMD
- (N) 3–LAMP FLUORESCENT FIXTURE – SED
- (E)CEILING TILE AND TILE INSULATION (ABOVE) TO BE REINSTALLED, DAMAGED SHALL BE REPLACED WITH NEW TO MATCH EXISTING (TYP)
- (N) CEILING LIGHT– SED
- (E) SPRINKLER HEAD –SFPD
- (E) ACCESS DOOR
- WALL MOUNT FIXTURE (SED)
- RECESSED LIGHTING FIXTURE
- (R) CEILING MOUNTED ROUTER
- (P) PROJECTOR CEILING MOUNTED
- (OS) CEILING MOUNTED OCC. SENSOR
- (OS) WALL MOUNTED OCC. SENSOR

GENERAL NOTES:

1. RE-INSTALL ALL CEILING MOUNTED PROJECTORS, SCREENS, ROUTERS AND SENSORS TO EXISTING LOCATIONS. PROVIDE POWER & DATA CONNECTIONS FOR ALL REINSTALLED DEVICES AND RESTORE TO WORKING ORDER.IOCATIONS SHOWN ON PLAN MAY BE DIAGRAMMATIC, RE-INSTALL TO ORGINAL LOCATION UON (TYP)

ALL LIGHTWEIGHT MISCELLANEOUS DEVICES, SUCH AS STROBE LIGHTS, OCCUPANCY SENSORS, SPEAKERS, EXIT SIGNS, ETC., SHALL BE ATTACHED TO THE CEILING GRID. IN ADDITION, DEVICES WEIGHING MORE THAN 10 LBS. SHALL HAVE A #12 GAGE SLACK SAFETY WIRE ANCHORED TO THE STRUCTURE. DEVICES WEIGHING MORE THAN 20 LBS. SHALL BE SUPPORTED FROM THE STRUCTURE ABOVE USING DETAILS PROVIDED BY THE REGISTERED DESIGN PROFESSIONAL.

2. SEE ELECTRICAL, MEP, FP AND FA FOR ADDITONAL DEVICES AS PART OF PROJECT SCOPE (TYP).

3. SEE A9.03 FOR ADD'L DETAILS (TYP)

SHEET NOTES:

1. GEN NOTE: SED FOR ADDITIONAL INFORMATION FOR LIGHTING AND CONTROLS (TYP).
2. WALL LOCATION WILL SHIFT, ADJUST NEW CEILING GRID ACCORDINGLY TO ALLOW FOR EXISTING FP/FIXTURES (TYP)
3. GEN. NOTE: REINSTALL SALVAGED CEILING TILES AND INSULATION TILES (ABOVE) IN NEW SUSPENDED CEILING GRID (TYP).
4. GEN. NOTE: REPLACE DAMAGED TILES AND INSULATION TILES (ABOVE) WHERE DAMAGED (TYP).
5. GEN. NOTE: WHERE GWB CEILING IS DISTURBED BY NEW SCOPE OF WORK, PATCH IN NEW GWB, PREP/PAINT TO MATCH EXISTING (TYP).
6. IN RM #122: NEW GWB, PROVIDE FOR REINSTALLATION OF EXISTING FIXTURES AND EQUIPMENT. TAPE, PREP AND MATCH (E) FINISH AND PAINT. SEE S2.1 DOE SCOPE OF WORK

OWNER:

Solano Community College District
2000 North Village Parkway
Vacaville, CA 95688

ARCHITECT:

CA ARCHITECTS
475 Gate Five Road, Suite 107
Sausalito, CA 94965
T 415.331.7655
F 415.331.7656

PROJECT:

Vacaville Classroom Building (Annex) Renovation Project

CONSULTANT TEAM:

STAMP

LICENSED ARCHITECT JOSHUA COHN C 23410 REN: 11-30-17 STATE OF CALIFORNIA

SHEET LEGEND:

ISSUE/REVISION:

NO:	DATE:	DESCRIPTION:
	04/25/2017	ISSUE FOR DD 100%
	06/06/2017	ISSUE FOR CD 50%
	06/30/2017	ISSUE FOR CD 60%
	07/20/2017	ISSUE FOR CD 100%
	10/18/2017	DSA BACKCHECK

KEY PLAN:

FILE: 48-C1

IDENTIFICATION STAMP
DIVISION OF THE STATE ARCHITECT
02-116082
AC TCC FLS GBC SS PVL
DATE: 10/31/2017

SCALE:
DATE:
PROJECT NO:
PERMIT APPLICATION NO.:

10 RCP

SCALE: 1/8" = 1' - 0"

REFLECTED CEILING PLAN

A6.00

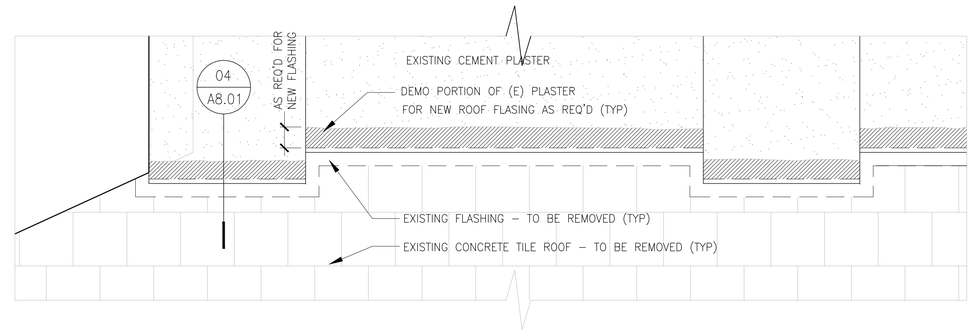

03 PARTIAL ELEVATION AT EXISTING ROOF/WALL

SCALE: 3/4" =1'-0"

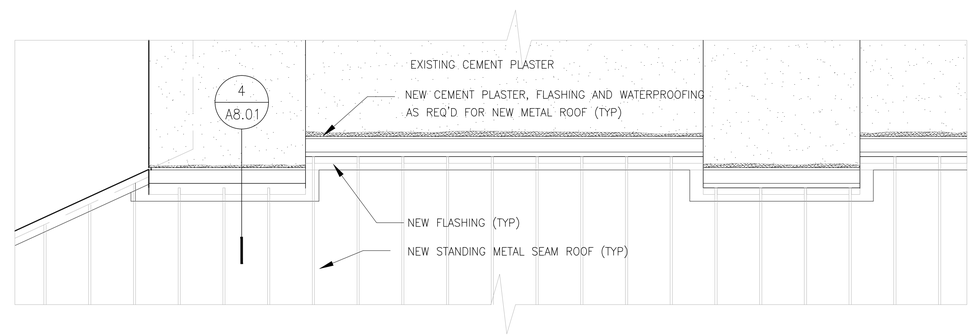

02 PARTIAL ELEVATION AT STANDING METAL SEAM ROOF/WALL

SCALE: 3/4" =1'-0"

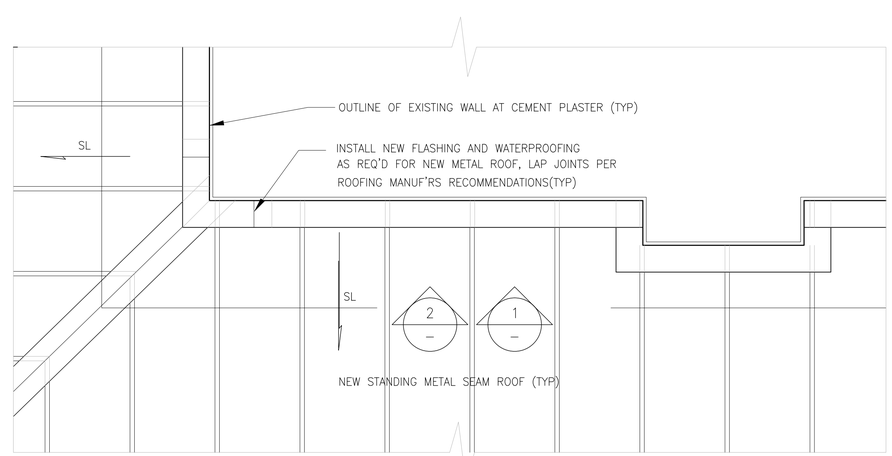

01 PARTIAL PLAN AT STANDING METAL SEAM ROOF

SCALE: 3/4" =1'-0"

OWNER:

Solano Community College District
2000 North Village Parkway
Vacaville, CA 95688

ARCHITECT:

CA ARCHITECTS
475 Gate Five Road, Suite 107
Sausalito, CA 94965
T 415.331.7655
F 415.331.7656

PROJECT:

Vacaville Classroom Building
(Annex) Renovation Project

CONSULTANT TEAM:

STAMP

SHEET LEGEND:

ISSUE/REVISION:

NO:	DATE:	DESCRIPTION:
	04/25/2017	ISSUE FOR DD 100%
	06/06/2017	ISSUE FOR CD 50%
	06/30/2017	ISSUE FOR CD 60%
	07/20/2017	ISSUE FOR CD 100%
	10/18/2017	DSA BACKCHECK

KEY PLAN:

FILE: 48-C1

IDENTIFICATION STAMP
DIVISION OF THE STATE ARCHITECT

02-116082

AC TCC FLS GBC SS PVL

DATE: 10/31/2017

SCALE:
DATE:
PROJECT NO:
PERMIT APPLICATION NO.:

EXT. DETAILS

A8.00

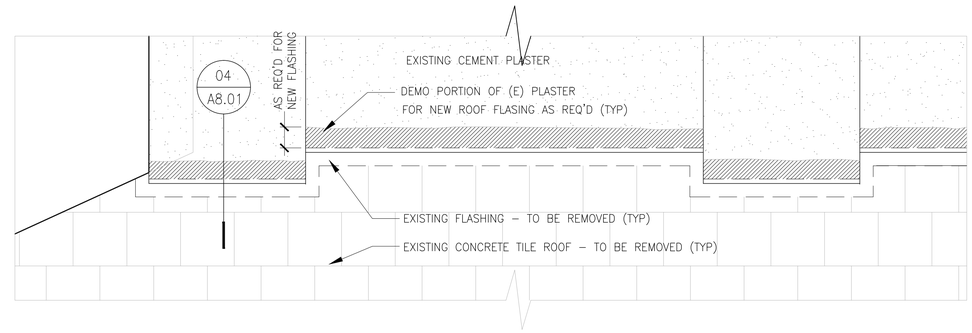

03 PARTIAL ELEVATION AT EXISTING ROOF/WALL

SCALE: 3/4" =1'-0"

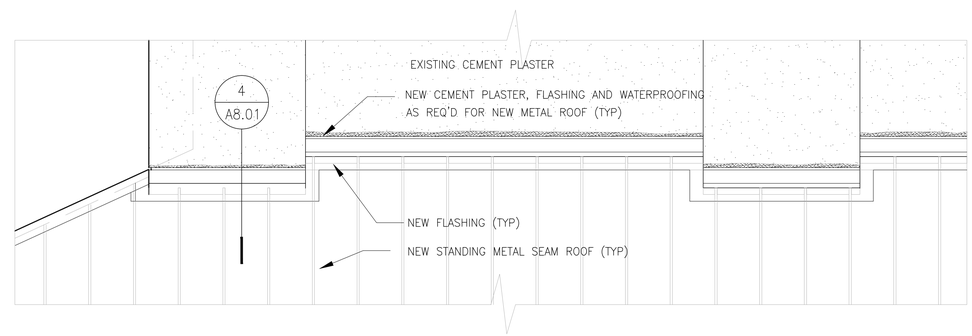

02 PARTIAL ELEVATION AT STANDING METAL SEAM ROOF/WALL

SCALE: 3/4" =1'-0"

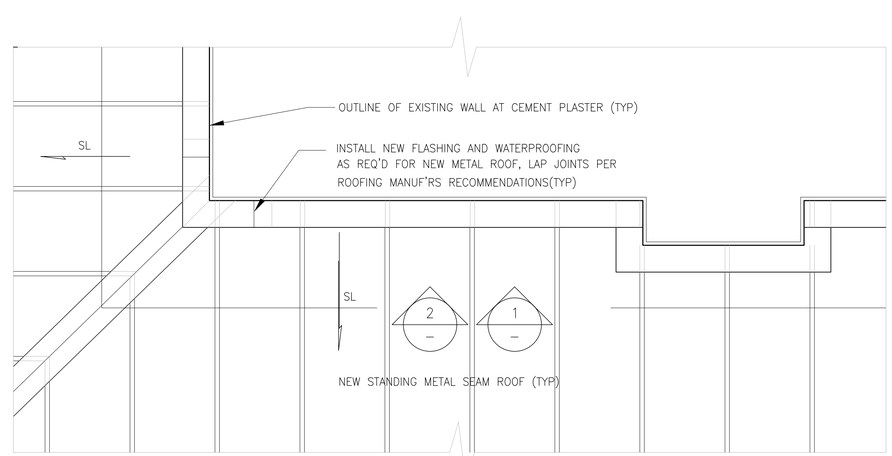

01 PARTIAL PLAN AT STANDING METAL SEAM ROOF

SCALE: 3/4" =1'-0"

OWNER:

Solano Community College District
2000 North Village Parkway
Vacaville, CA 95688

ARCHITECT:

CA ARCHITECTS
475 Gate Five Road, Suite 107
Sausalito, CA 94965
T 415.331.7655
F 415.331.7656

PROJECT:

Vacaville Classroom Building
(Annex) Renovation Project

CONSULTANT TEAM:

STAMP

SHEET LEGEND:

ISSUE/REVISION:

NO:	DATE:	DESCRIPTION:
	04/25/2017	ISSUE FOR DD 100%
	06/06/2017	ISSUE FOR CD 50%
	06/30/2017	ISSUE FOR CD 60%
	07/20/2017	ISSUE FOR CD 100%
	10/18/2017	DSA BACKCHECK

KEY PLAN:

FILE: 48-C1

IDENTIFICATION STAMP
DIVISION OF THE STATE ARCHITECT

02-116082

AC TCC FLS GBC SS PVL

DATE: 10/31/2017

SCALE:
DATE:
PROJECT NO:
PERMIT APPLICATION NO.:

EXT. DETAILS

A8.00

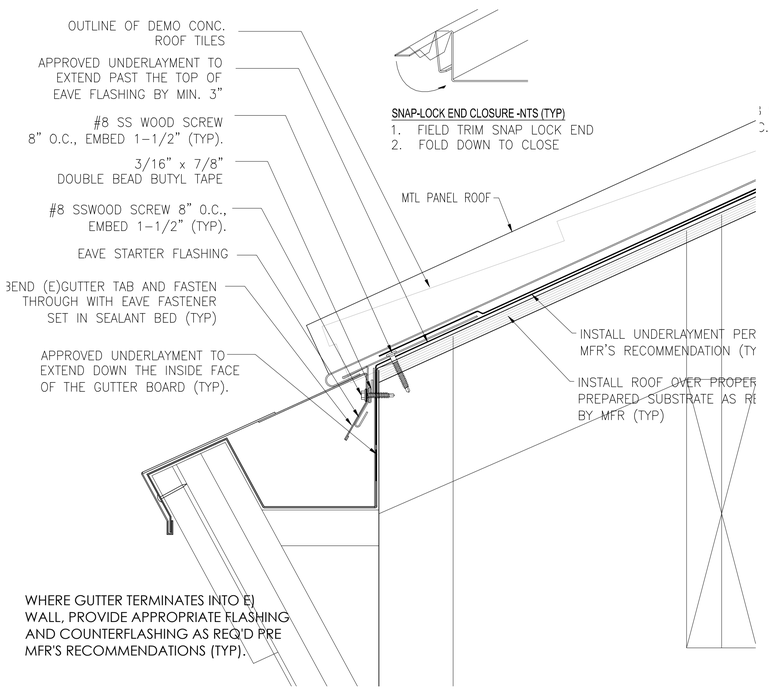

06 METAL ROOF EAVE AT GUTTER (TYP)

SCALE: 3" = 1'-0"

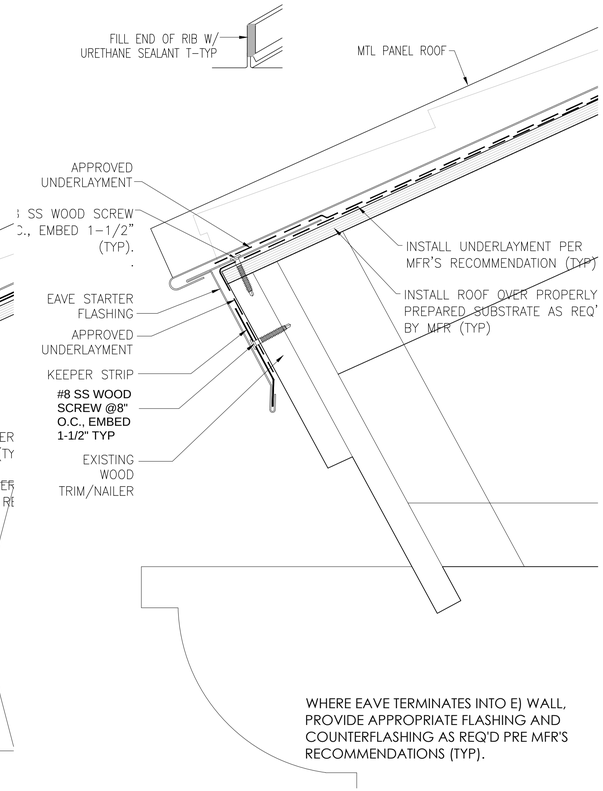

03 METAL ROOF EAVE AT DRIP EDGE (TYP)

SCALE: 3" = 1'-0"

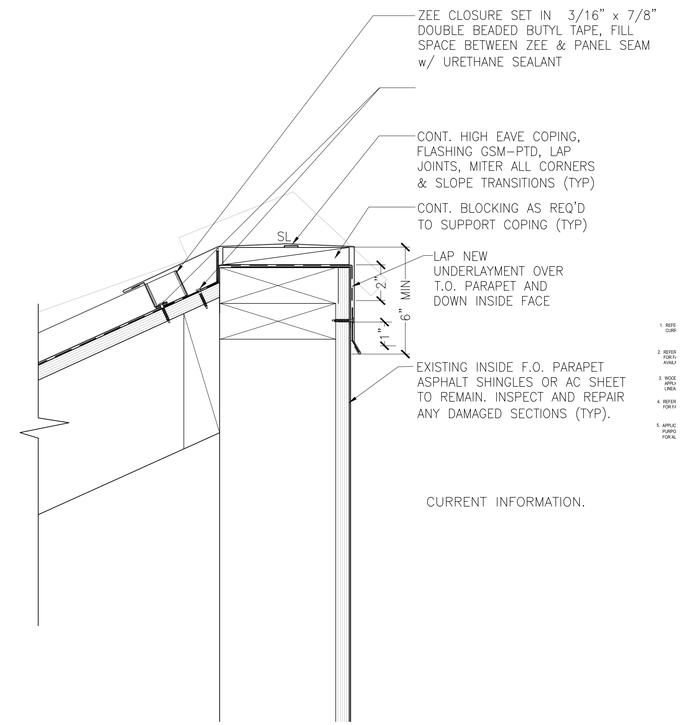

01 FIXED HIGH EAVE

SCALE: 3" = 1'-0"

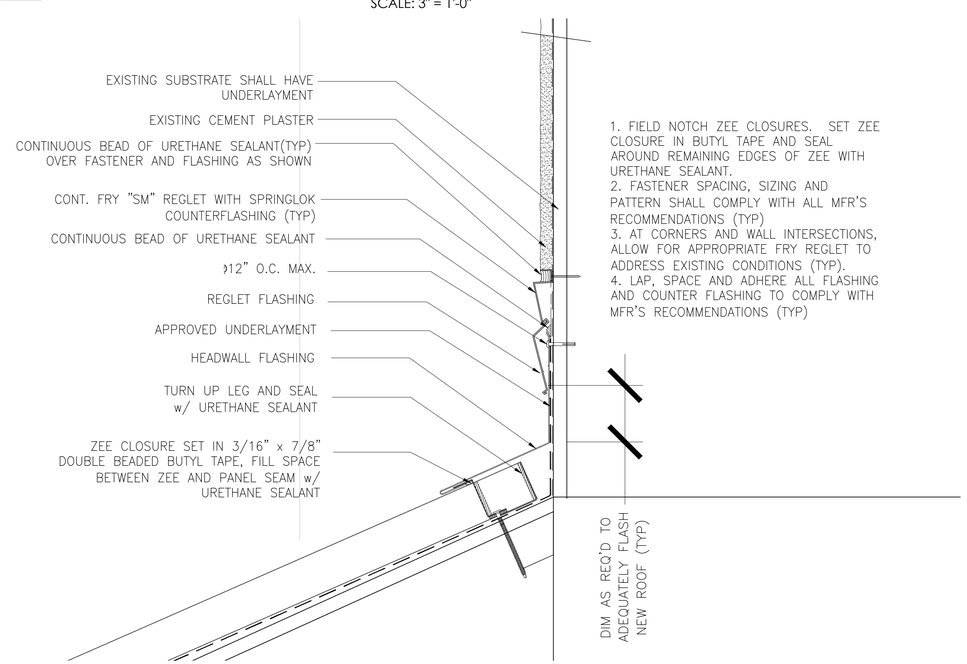

04 FIXED HEAD WALL

SCALE: 3" = 1'-0"

OWNER:

Solano Community College District
2000 North Village Parkway
Vacaville, CA 95688

ARCHITECT:

CA ARCHITECTS
475 Gate Five Road, Suite 107
Sausalito, CA 94965
T 415.331.7655
F 415.331.7656

PROJECT:

Vacaville Classroom Building (Annex) Renovation Project

CONSULTANT TEAM:

STAMP

SHEET LEGEND:

ISSUE/REVISION:

NO:	DATE:	DESCRIPTION:
	04/25/2017	ISSUE FOR DD 100%
	06/06/2017	ISSUE FOR CD 50%
	06/30/2017	ISSUE FOR CD 60%
	07/20/2017	ISSUE FOR CD 100%
	10/18/2017	DSA BACKCHECK

KEY PLAN:

FILE: 48-C1

IDENTIFICATION STAMP
DIVISION OF THE STATE ARCHITECT

02-116082

AC TCC FLS GBC SS PVL

DATE: 10/31/2017

SCALE:
DATE:
PROJECT NO:
PERMIT APPLICATION NO.:

EXT.DETAILS

A8.01

NOTES:
1. WHEN DRAIN SUMP EXCEEDS 1:12 DRAIN INSERT SHALL BE INSTALLED (TYP)
2. THE HOLE IN THE INTERPLY SHOULD EXTEND A MINIMUM OF 1 INCH BEYOND THE CLAMPING RING AND SHOULD NOT BE SMALLER THAN THE DIAMETER OF THE LEADER PIPE. (TYP)
3. ASPHALT IS APPLIED UNIFORMLY TO EACH PLY AT A RATE OF APPROXIMATELY 25 LBS PER 100 SQ/FT OF ROOF SURFACE (±15%) – TYP

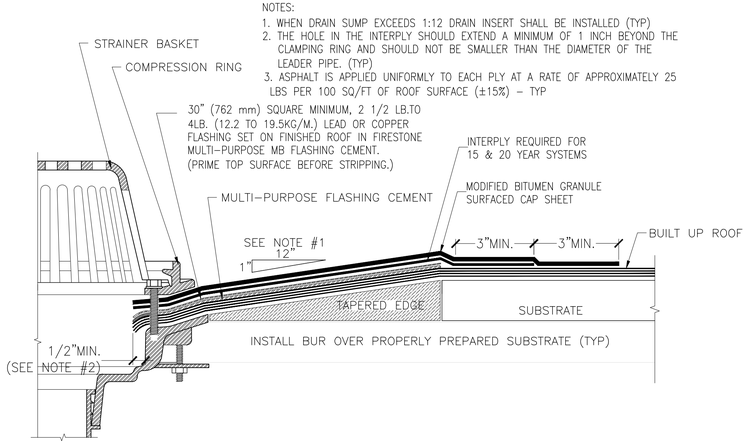

11 ROOF DRAIN FLASHING AT BUR (TYP) - SPD (P2.2) FOR OVERFLOW

NTS

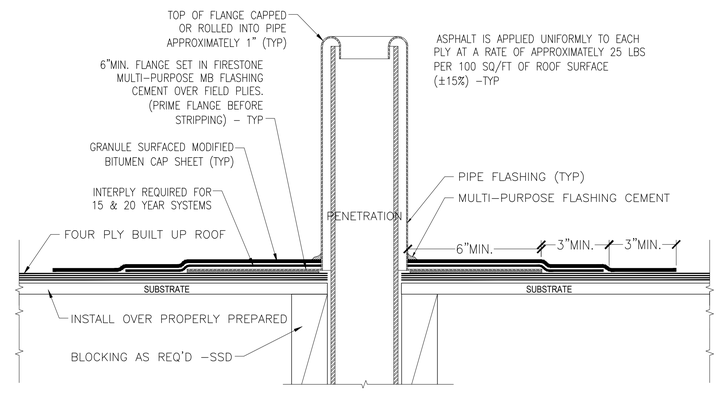

06 BUR ROOF PENETRATIONS (TYP)

USE FOR TYPICAL ROOF PENETRATIONS U.O.N.

SCALE: 3" = 1'-0"

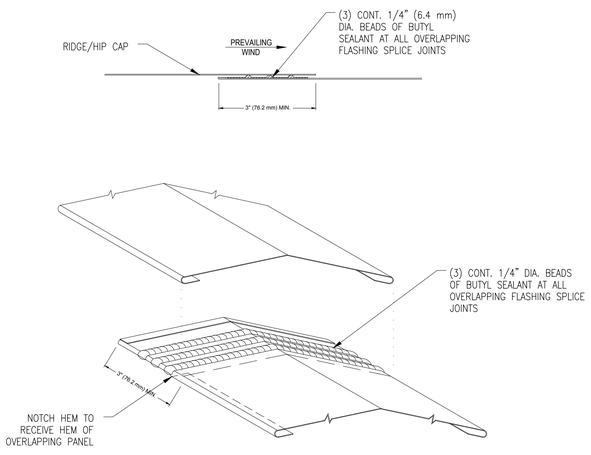

10 MTL ROOF AT RIDGE (TYP)

NTS

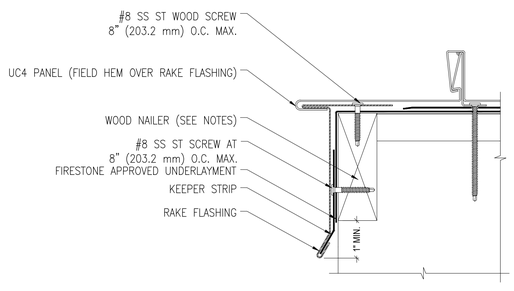

04 MTL ROOF AT RAKE (TYP)

NTS

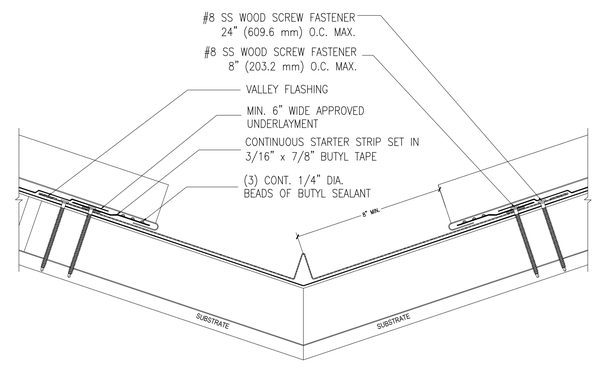

01 MTL ROOF AT VALLEY (TYP)

SCALE: 3" = 1'-0"

OWNER:

Solano Community College District
2000 North Village Parkway
Vacaville, CA 95688

ARCHITECT:

CA ARCHITECTS
475 Gate Five Road, Suite 107
Sausalito, CA 94965
T 415.331.7655
F 415.331.7656

PROJECT:

Vacaville Classroom Building
(Annex) Renovation Project

CONSULTANT TEAM:

STAMP

SHEET LEGEND:

ISSUE/REVISION:

NO:	DATE:	DESCRIPTION:
	04/25/2017	ISSUE FOR DD 100%
	06/06/2017	ISSUE FOR CD 50%
	06/30/2017	ISSUE FOR CD 60%
	07/20/2017	ISSUE FOR CD 100%
	10/18/2017	DSA BACKCHECK

KEY PLAN:

FILE: 48-C1
IDENTIFICATION STAMP
DIVISION OF THE STATE ARCHITECT
02-116082
AC TCC FLS GBC SS PVL
DATE: 10/31/2017

SCALE:
DATE:
PROJECT NO:
PERMIT APPLICATION NO.:

EXT. DETAILS

A8.02

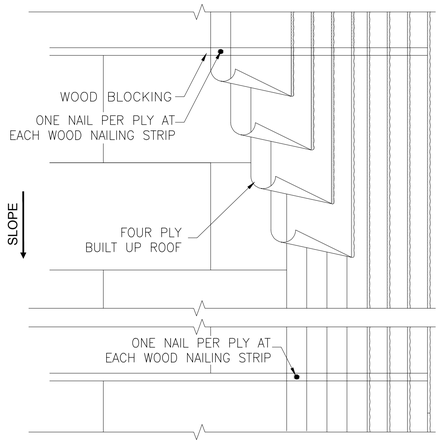

12 TYPICAL BUR - PLY SE□UENCE

INSTALL PER MFR'S RECOMMENDATION

SCALE: 3" = 1'-0"

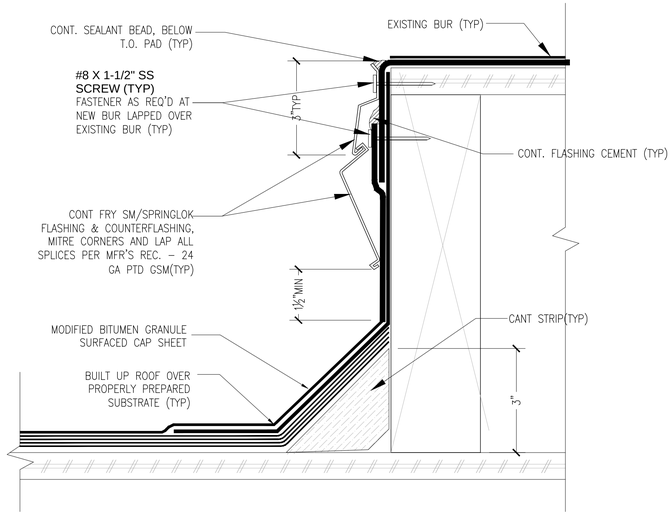

08 BUR AT E□UIPMENT SUPPORT (TYP)

SCALE: 6" = 1'-0"

GENERAL NOTE: DETAILS MAY VARY WITH MANUFACTURER, CONTRACTOR SHALL

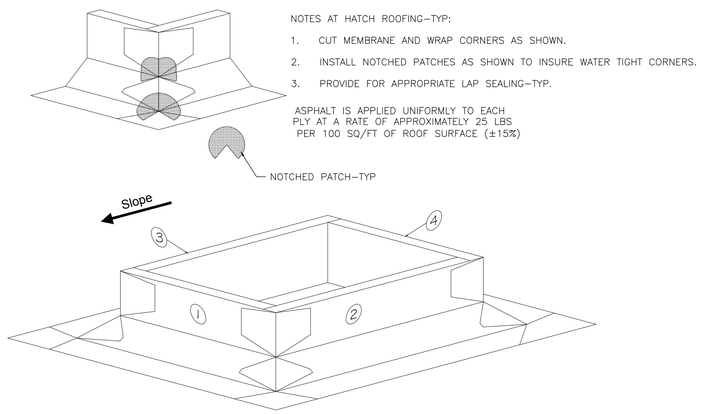

03 ROOF HATCH ROOFING DIAGRAM

NTS

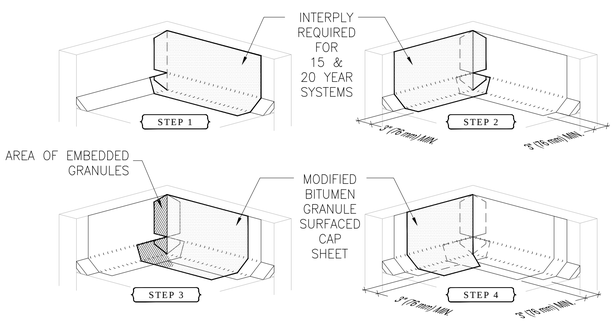

11 TYPICAL BUR DETAILS AT CORNERS

INSTALL PER MFR'S RECOMMENDATION

SCALE: 3" = 1'-0"

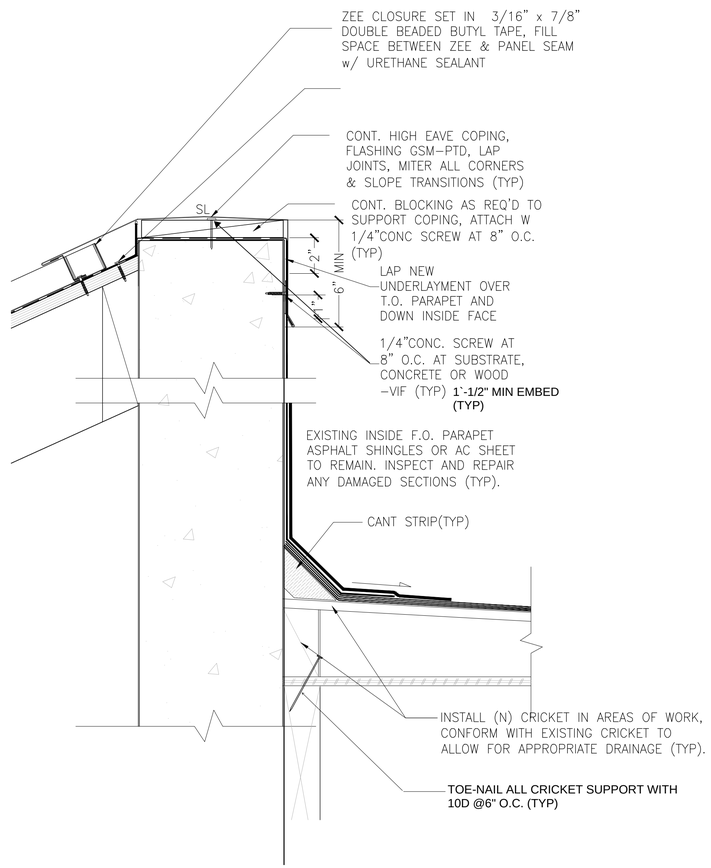

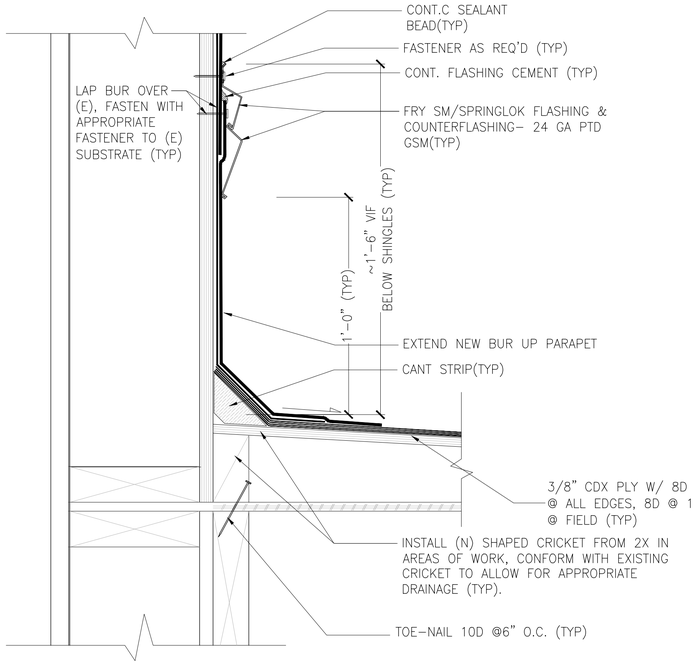

04 ROOF/PARAPET CONNECTION (TYP)

SCALE: 3" = 1'-0"

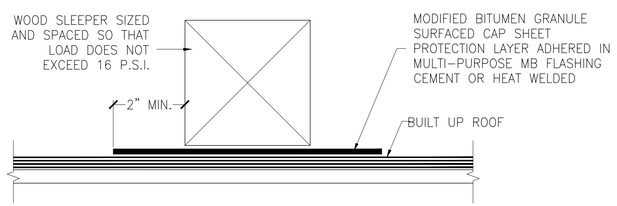

10 TYPICAL BUR DETAILS AT CORNERS

SCALE: 3" = 1'-0"

OWNER:

Solano Community College District
2000 North Village Parkway
Vacaville, CA 95688

ARCHITECT:

CA ARCHITECTS
475 Gate Five Road, Suite 107
Sausalito, CA 94965
T 415.331.7655
F 415.331.7656

PROJECT:

Vacaville Classroom Building (Annex) Renovation Project

CONSULTANT TEAM:

STAMP

SHEET LEGEND:

ISSUE/REVISION:

NO:	DATE:	DESCRIPTION:
	04/25/2017	ISSUE FOR DD 100%
	06/06/2017	ISSUE FOR CD 50%
	06/30/2017	ISSUE FOR CD 60%
	07/20/2017	ISSUE FOR CD 100%
	10/18/2017	DSA BACKCHECK

KEY PLAN:

FILE: 48-C1
IDENTIFICATION STAMP
DIVISION OF THE STATE ARCHITECT
02-116082
AC ICC FLS GBC SSPVL
DATE: 10/31/2017

SCALE:
DATE:
PROJECT NO:
PERMIT APPLICATION NO.:

EXT. DETAILS

A8.03

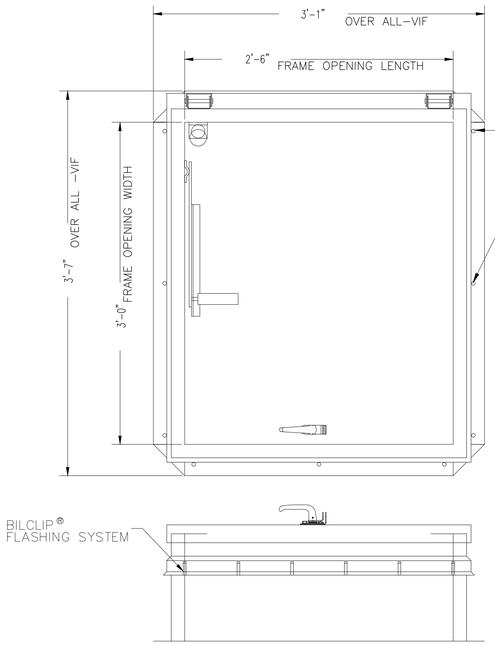

11 ROOF HATCH PLAN

SCALE: 1-1/2" = 1' - 0"

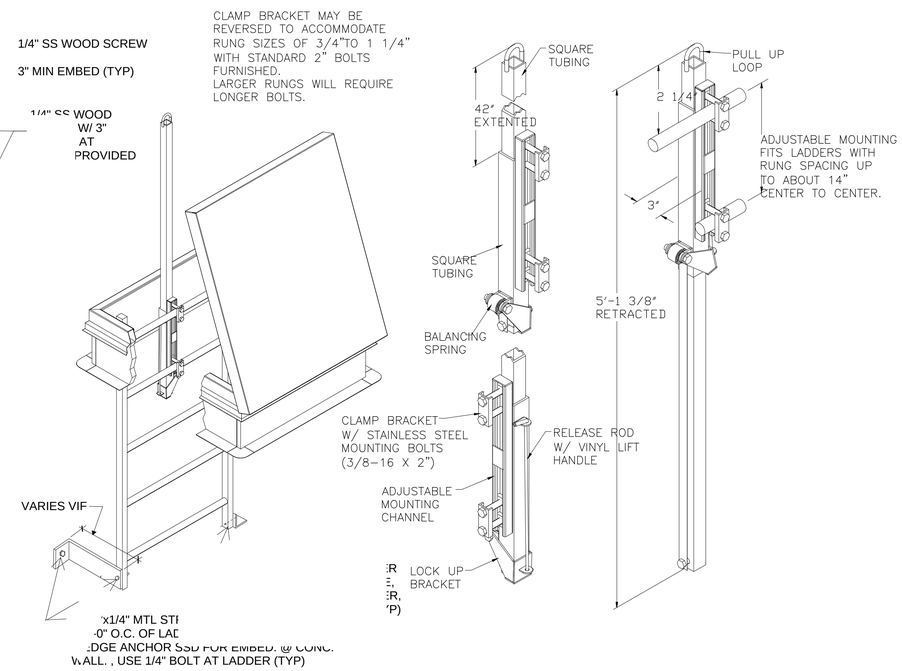

08 SAFETY POLE/LADDER AT HATCH (TYP)

SCALE: NTS

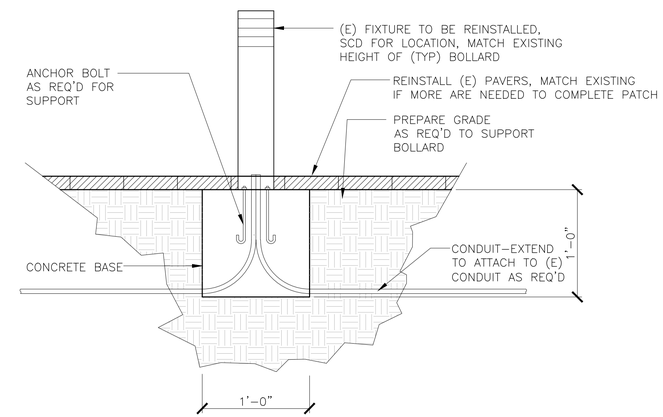

03 BOLLARD BASE DETAIL - SECTION - SCD

(REFERENCE 2/E0.1 - FROM SCCD SET 8-28-1995)

SCALE: 1-1/2" = 1' - 0"

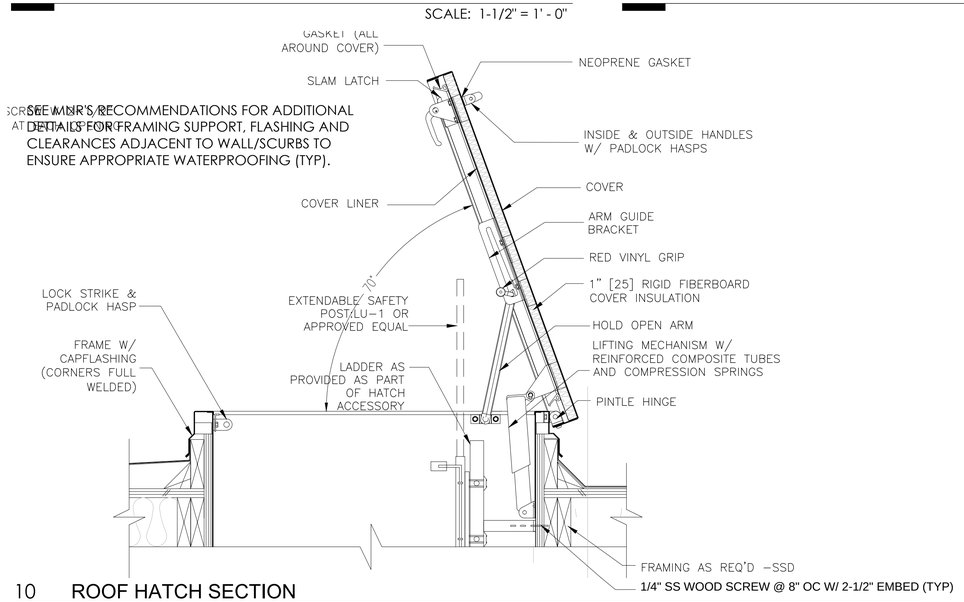

10 ROOF HATCH SECTION

SEE 8 & 11 / A8.04 & 3/A8.03 FOR ADD'L REQUIREMENTS (TYP)

SCALE: 1-1/2" = 1' - 0"

GENERAL HATCH AND LADDER RE□UIREMENTS PER 2016 CMC AND CEC, & CCR DIV 8, SEC 3277 (TYP):

1. PER CMC 904.10.3.3 ACCESS DOORS SHALL BE AT LEAST TWENTY-TWO (22) INCHES X TWENTY-FOUR (24) INCHES IN SIZE, SHALL OPEN EASILY AND SAFELY UNDER ALL CONDITIONS, ESPECIALLY SNOW, AND SHALL BE CONSTRUCTED SO AS TO PERMIT ACCESS FROM THE ROOF SIDE UNLESS DELIBERATELY LOCKED ON THE INSIDE. AT LEAST SIX (6) FEET OF CLEARANCE SHALL BE AVAILABLE BETWEEN THE ACCESS OPENING AND THE EDGE OF THE ROOF OR SIMILAR HAZARD (TYP).

2. ALL RUNGS SHALL HAVE A MINIMUM DIAMETER OF 3/4 INCH FOR METAL LADDERS. THE DISTANCE BETWEEN THE TOP SURFACES OF RUNGS, CLEATS, AND STEPS SHALL NOT EXCEED 12 INCHES AND SHALL BE UNIFORM THROUGHOUT THE LENGTH OF THE LADDER EXCEPT THE VERTICAL DISTANCE OF THE FIRST RUNG FROM GROUND LEVEL MAY BE AS HIGH AS 14 INCHES. METAL LADDERS AND APPURTENANCES SHALL BE PAINTED OR OTHERWISE TREATED TO RESIST CORROSION AND RUSTING WHEN LOCATION DEMANDS.

3. THE MINIMUM DESIGN LIVE LOAD SHALL BE A SINGLE CONCENTRATED LOAD OF 300 POUNDS.

4. ALL HATCH COVERS SHALL OPEN A MINIMUM OF 60 DEGREES FROM THE HORIZONTAL. THE DISTANCE FROM THE CENTER LINE OF RUNGS OR CLEATS TO THE EDGE OF THE HATCH OPENING ON THE CLIMBING SIDE SHALL BE NOT LESS THAN 24 INCHES FOR OFFSET WELLS OR 30 INCHES FOR STRAIGHT WELLS.

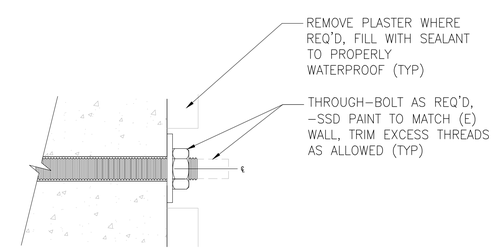

01 ANCHOR BOLT AT EXT WALL - SSD

SCALE: 3" = 1' - 0"

OWNER:

Solano Community College District
2000 North Village Parkway
Vacaville, CA 95688

ARCHITECT:

CA ARCHITECTS
475 Gate Five Road, Suite 107
Sausalito, CA 94965
T 415.331.7655
F 415.331.7656

PROJECT:

Vacaville Classroom Building (Annex) Renovation Project

CONSULTANT TEAM:

STAMP

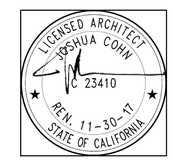

SHEET LEGEND:

ISSUE/REVISION:

NO:	DATE:	DESCRIPTION:
	04/25/2017	ISSUE FOR DD 100%
	06/06/2017	ISSUE FOR CD 50%
	06/30/2017	ISSUE FOR CD 60%
	07/20/2017	ISSUE FOR CD 100%
	10/18/2017	DSA BACKCHECK

KEY PLAN:

FILE: 48-C1
IDENTIFICATION STAMP
DIVISION OF THE STATE ARCHITECT
02-116082
AC ICC FLS GBC SS PVL
DATE: 10/31/2017

SCALE:
DATE:
PROJECT NO:
PERMIT APPLICATION NO.:

EXT. DETAILS

A8.04

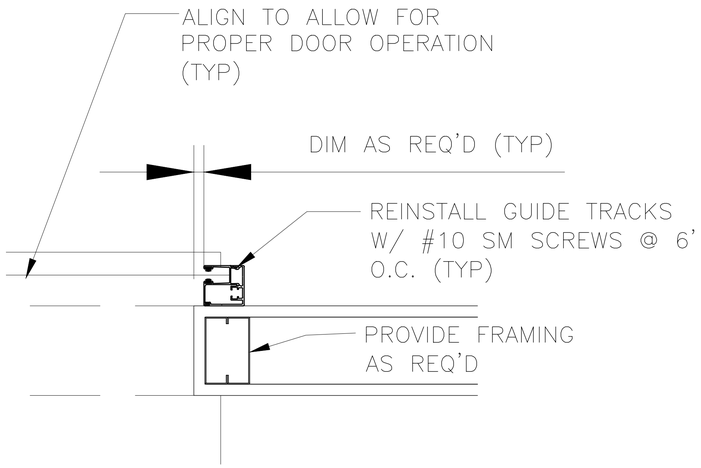

14 TYPICAL JAMB DETAIL AT COILING DOOR

SCALE: 3" = 1' - 0"

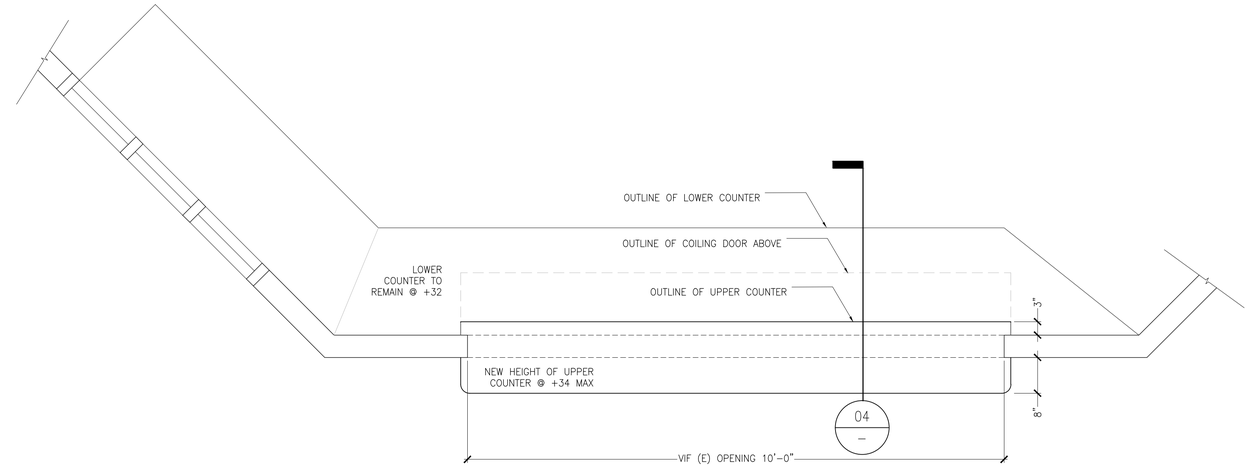

06 PARTIAL PLAN @ADMIN OFFICE COILING SHUTTER

SCALE: 3/4" = 1' - 0"

GENERAL NOTE FOR COILING COUNTER DOOR: REMOVE (E) TOP COUNTER AND COILING DOOR/ ASSEMBLY TO BE REINSTALLED OVER LOWER TOP COUNTER AND HEAD AS SHOWN. MAINTAIN (E) HEIGHT OF OPENING AND REINSTALL ALL DOOR HARDWARE, TRACKS AND ACCESSORIES TO ALLOW FOR COILING DOOR TO REMAIN OPERATIONAL.

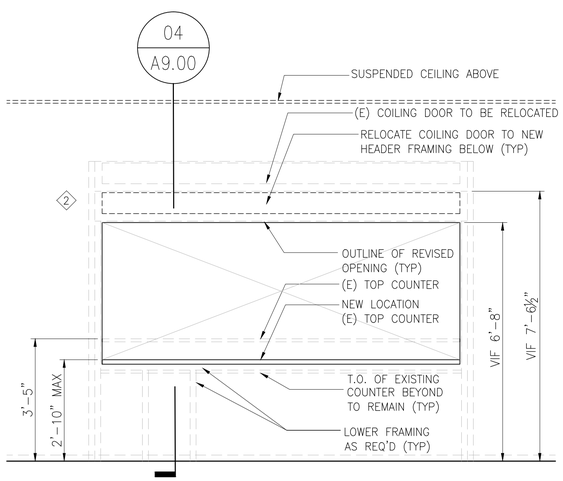

10 PARTIAL ELEVATION @ADMIN OFFICE COILING SHUTTER

SCALE: 1-1/2" = 1' - 0"

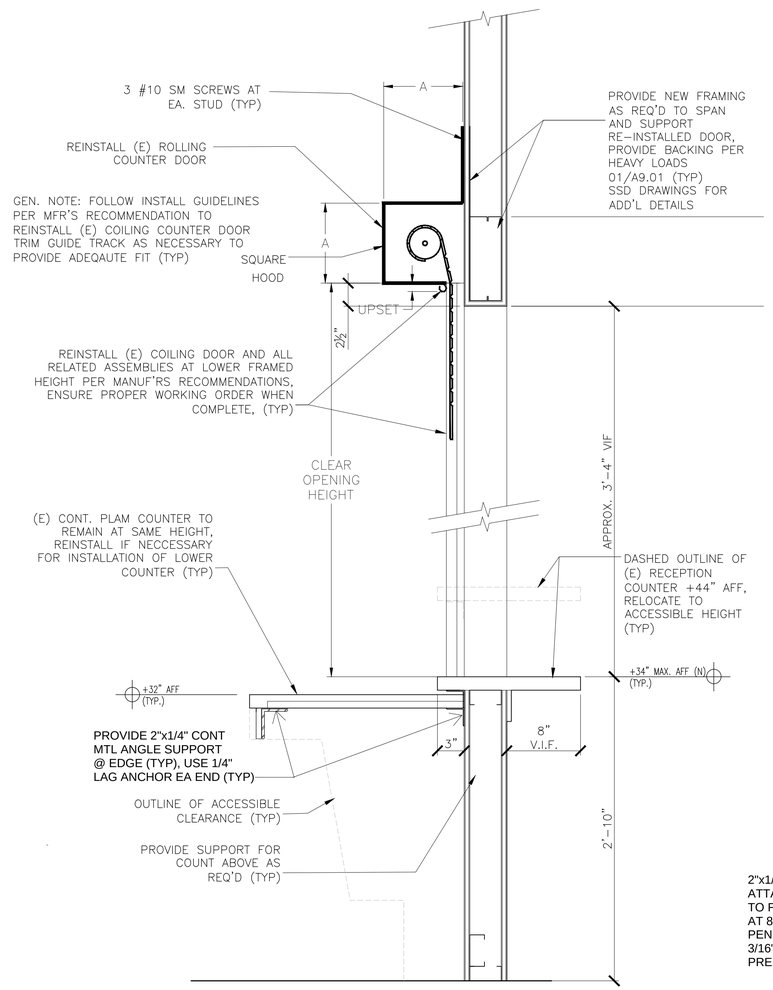

04 SECTION @ADMIN OFFICE COILING SHUTTER

SCALE: 1-1/2" = 1' - 0"

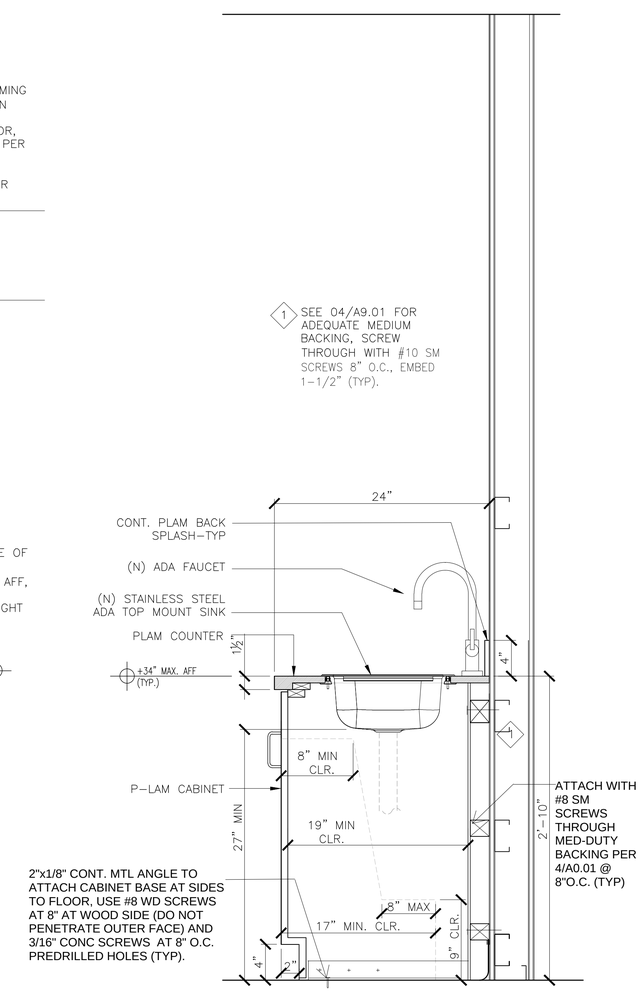

01 SECTION @ACCESSIBLE SINK & COUNTERTOP

SCALE: 1-1/2" = 1' - 0"

OWNER:

Solano Community College District
2000 North Village Parkway
Vacaville, CA 95688

ARCHITECT:

CA ARCHITECTS
475 Gate Five Road, Suite 107
Sausalito, CA 94965
T 415.331.7655
F 415.331.7656

PROJECT:

Vacaville Classroom Building (Annex) Renovation Project

CONSULTANT TEAM:

STAMP

SHEET LEGEND:

ISSUE/REVISION:

NO:	DATE:	DESCRIPTION:
	04/25/2017	ISSUE FOR DD 100%
	06/06/2017	ISSUE FOR CD 50%
	06/30/2017	ISSUE FOR CD 60%
	07/20/2017	ISSUE FOR CD 100%
	10/18/2017	DSA BACKCHECK

KEY PLAN:

FILE: 48-C1
IDENTIFICATION STAMP
DIVISION OF THE STATE ARCHITECT
02-116082
AC TCC FLS GBC SS PVL
DATE: 10/31/2017

SCALE:
DATE:
PROJECT NO:
PERMIT APPLICATION NO.:

INTERIOR DETAILS

A9.00

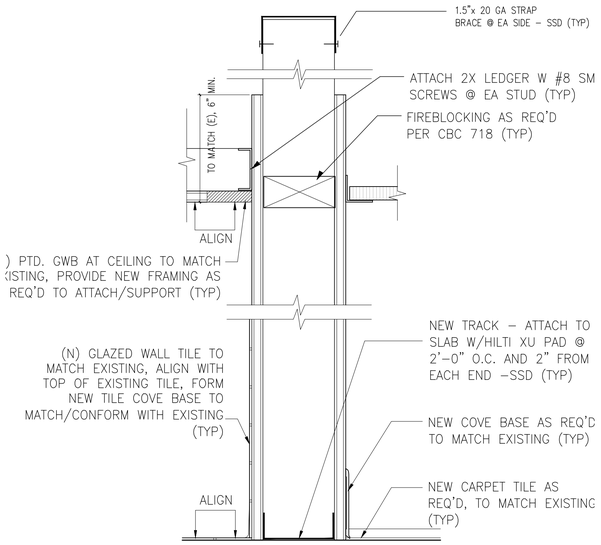

12 WALL SECTION @ (N) WALL RESTROOMS 111&112

SCALE: 3" = 1' - 0"

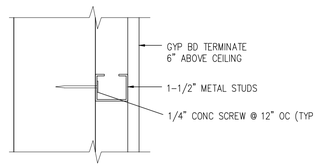

P5 FURRING – NON–RATED

PLAN DESI

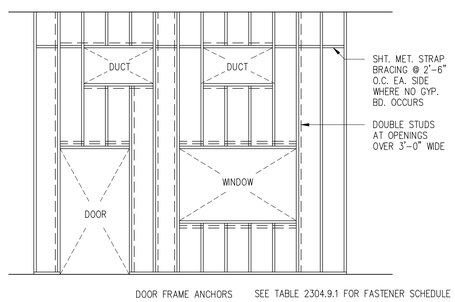

08 TYPICAL WALL FRAMING CONTRACT

SCALE: 1/4"=1'-0"

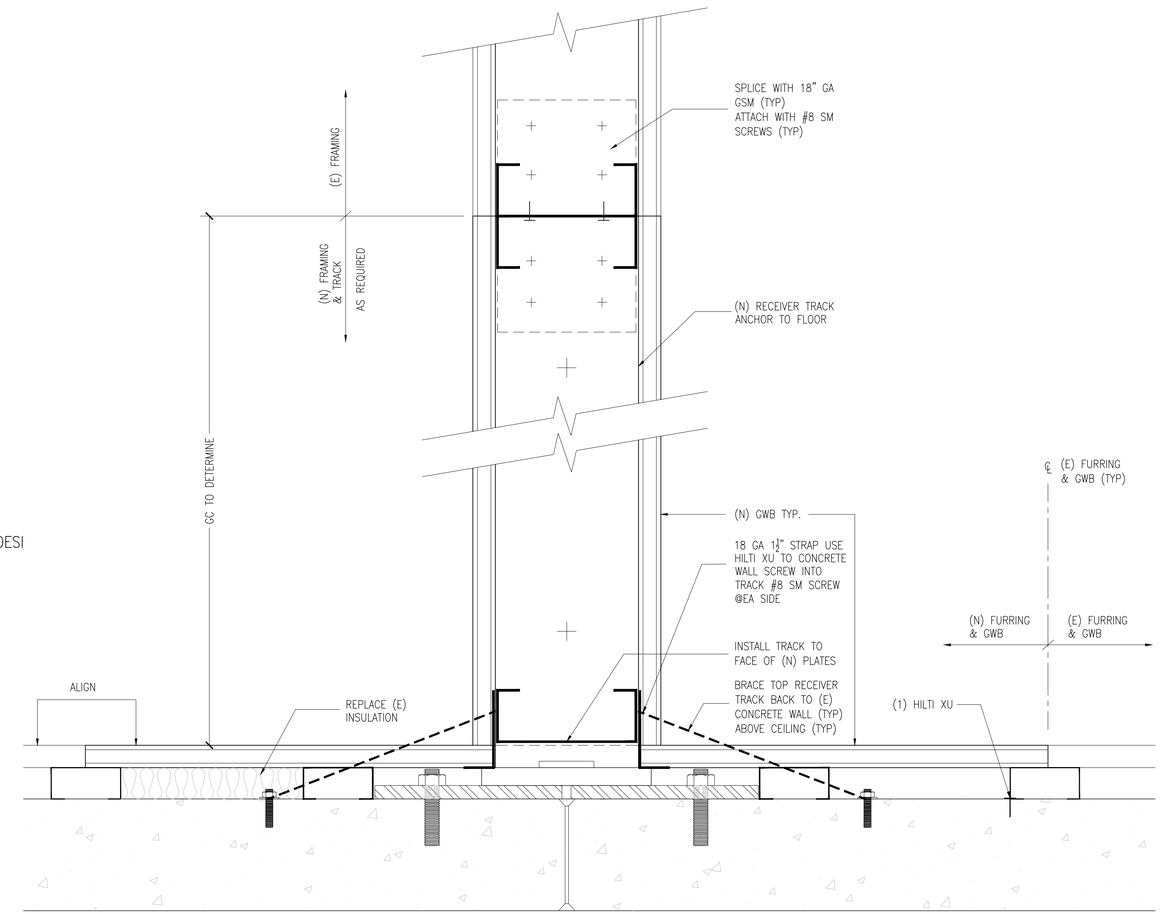

05 PARTIAL WALL SECTION

SCALE: 6"=1'-0"

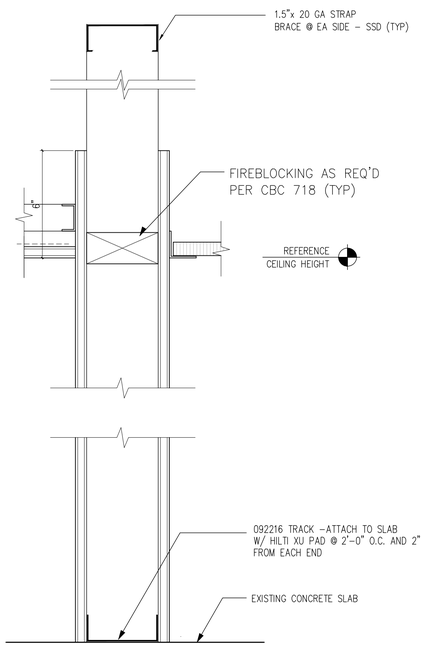

10 NON - RATED WALL SECTION

SCALE: 3" = 1' - 0"

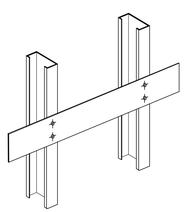

TYPE 'A' BACKING PLATE

1. FOR MISC ITEMS SUCH AS SURFACE–MOUNTED MIRRORS & TOWEL DISPENSERS, WASTE RECEPTACLES, FIRE EXTINGUISHERS,
2. SEE PARTITION TYPES FOR STUD SIZE AND GA.
3. VERIFY LENGTH, HEIGHT, LOCATION, & QUANTITY OF BACKING PLATES REQ'D WITH APPROPRIATE MANUFACTURERS & TRADES.
4. USE 16 GA X 4" STRAP PL FASTENED TO STUD WITH (2) #12 SHEET METAL SCREWS.
5. SPAN BACKING PLATE OVER 3 STUDS MINIMUM.
6. ATTACH ITEMS TO BACKING PLATE WITH #12 SELF–TAPPING SHEET METAL SCREWS U.O.N.

SEE TABLE 2304.9.1 FOR FASTENER SCHEDULE (TYP)

07 BACKING PLATE LIGHT LOADS

NTS

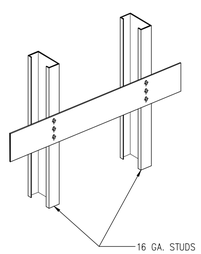

TYPE 'B' BACKING PLATE

1. FOR BASE CABINETS, FULL HEIGHT CABINETS, RUB RAILS, HAND RAILS, LOCKERS, ET CETERA, WEIGHING LESS THAN 100 LBS./FT
2. SEE PARTITION TYPES FOR STUD SIZE & GA.
3. VERIFY LENGTH, HEIGHT, LOCATION, & QUANTITY OF BACKING PLATES REQ'D.
4. FASTEN 14 GA X 6" STRAP PL TO EA STUD W/ (3) #12 SHEET METAL SCREWS.
5. SPAN BACKING PLATE OVER 3 STUDS MIN.
6. ATTACH ITEMS TO BACKING PLATE WITH #12 SELF–TAPPING SHEET METAL SCREWS, U.O.N.

04 BACKING PLATE - MOD LOADS

NTS

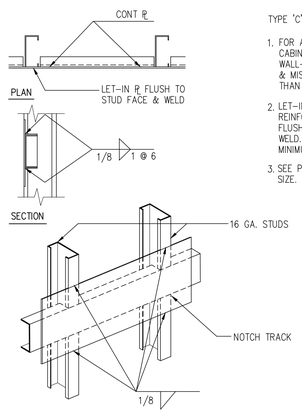

TYPE 'C' BACKING PLATE

1. FOR ALL UPPER WALL–HUNG CABINETS, GRAB BARS, WALL–MOUNTED EQUIP & MISC ITEMS WEIGHING LESS THAN 200 LBS./FOOT.
2. LET–IN CONT 6"X 14 GA. PL REINFORCED WITH STUD TRACK FLUSH TO FACE OF STUD & WELD. SPAN BACKING PL 3 STUDS MINIMUM.
3. SEE PARTITION TYPES FOR STUD SIZE.

01 BACKING PLATE - HEAVY LOADS

NTS

OWNER:

Solano Community College District
2000 North Village Parkway
Vacaville, CA 95688

ARCHITECT:

CA ARCHITECTS
475 Gate Five Road, Suite 107
Sausalito, CA 94965
T 415.331.7655
F 415.331.7656

PROJECT:

Vacaville Classroom Building
(Annex) Renovation Project

CONSULTANT TEAM:

STAMP

SHEET LEGEND:

ISSUE/REVISION:

NO:	DATE:	DESCRIPTION:
	04/25/2017	ISSUE FOR DD 100%
	06/06/2017	ISSUE FOR CD 50%
	06/30/2017	ISSUE FOR CD 60%
	07/20/2017	ISSUE FOR CD 100%
	10/18/2017	DSA BACKCHECK

KEY PLAN:

FILE: 48-C1

IDENTIFICATION STAMP
DIVISION OF THE STATE ARCHITECT

02-116082

AC ICC FLS GBC SS PVL

DATE: 10/31/2017

SCALE:
DATE:
PROJECT NO:
PERMIT APPLICATION NO.:

INTERIOR DETAILS

A9.01

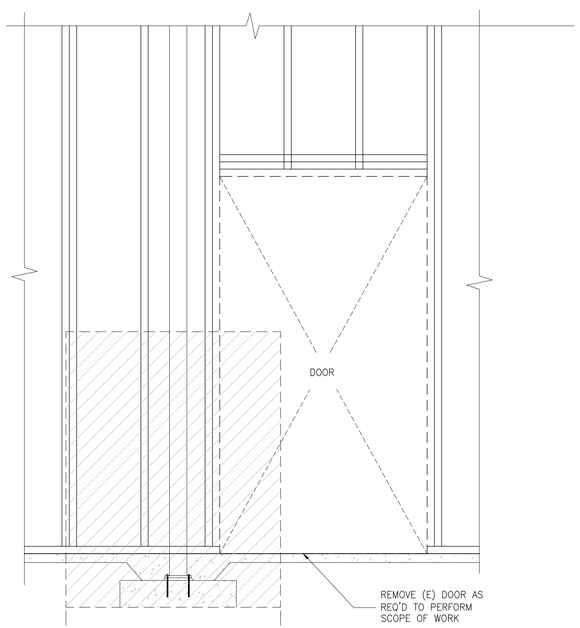

10 PARTIAL ELEVATION

SCALE: 3/4" = 1'-0"

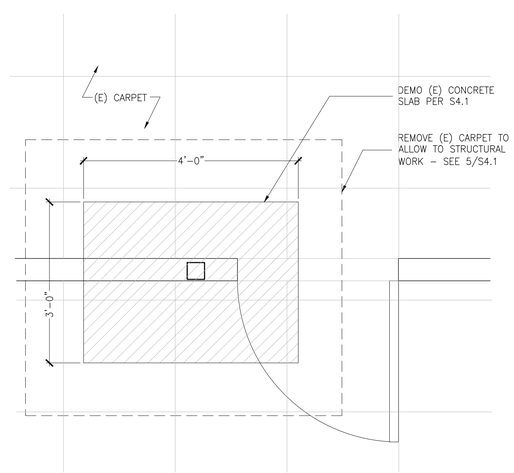

07 PLAN VIEW

SCALE: 3/4" = 1'-0"

OWNER:

Solano Community College District
2000 North Village Parkway
Vacaville, CA 95688

ARCHITECT:

CA ARCHITECTS
475 Gate Five Road, Suite 107
Sausalito, CA 94965
T 415.331.7655
F 415.331.7656

PROJECT:

Vacaville Classroom Building
(Annex) Renovation Project

CONSULTANT TEAM:

STAMP

SHEET LEGEND:

ISSUE/REVISION:

NO:	DATE:	DESCRIPTION:
	04/25/2017	ISSUE FOR DD 100%
	06/06/2017	ISSUE FOR CD 50%
	06/30/2017	ISSUE FOR CD 60%
	07/20/2017	ISSUE FOR CD 100%
	10/18/2017	DSA BACKCHECK

KEY PLAN:

FILE: 48-C1

IDENTIFICATION STAMP
DIVISION OF THE STATE ARCHITECT

02-116082

AC TCC FLS GBC SS PVL

DATE: 10/31/2017

SCALE:
DATE:
PROJECT NO:
PERMIT APPLICATION NO.:

INTERIOR DETAILS

A9.02

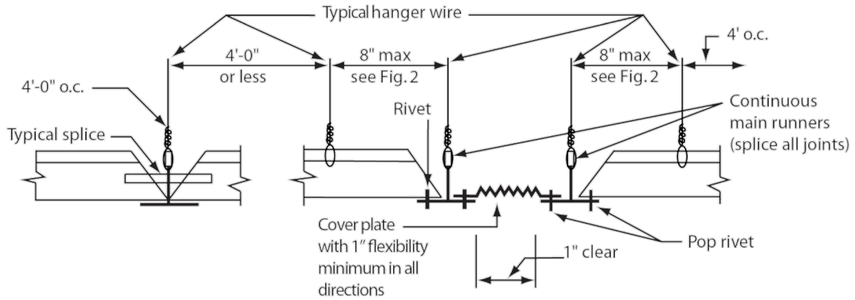

(A) **Expansion joint at inersections of corridors, junctions of corridors and lobbies, similar areas and ceiling areas over 2500 sq. ft.**

12 SUSPENDED CEILING - EXPANSION DETAILS (TYP.)

NTS

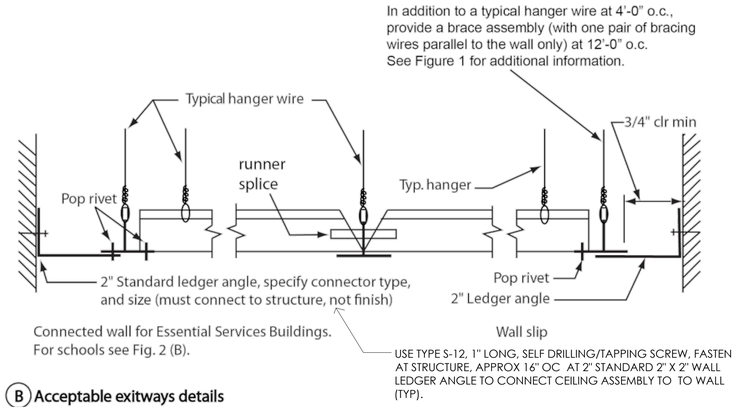

(B) **Acceptable exitways details**

06 SUSPENDED CEILING - EXITWAYS DETAILS (TYP.)

NTS

GENERAL NOTES:

1. CBC SECTION 1615A1.16 (1615.10.13*) REQUIRES THE DESIGN AND INSTALLATION TO BE IN COMPLIANCE WITH ASTM C635, C636, AND E580, SECTION 5, AS AMENDED BY 2010 CBC SECTION 1615A.1.16 (1615.10.13*).

2. NOTE: AMENDMENTS IN CBC SECTION 1615A.1.16 (1615.10.13*) REPLACE ASCE 7, SECTION 13.5.6.

3. THE REQUIREMENTS IN THIS IR APPLY TO FLAT AND LEVEL CEILING SYSTEMS WHOSE TOTAL WEIGHT INCLUDING CEILING MOUNTAED AIR TERMINALS, SERVICES AND LIGHT FIXTURES, DOES NOT EXCEED FOUR (4) PSF. HEAVY SYSTEMS, SYSTEMS THAT ARE NOT FLAT AND LEVEL, AND THOSE SUPPORTING LATERAL LOADS FROM PARTITIONS ARE BEYOND THE SCOPE OF THIS IR ADN WILL REQUIRE SPECIAL DESIGN DETAILS.

4. USE TYPE S-12, 1" LONG, SELF DRILLING/TAPPING SCREW, FASTEN AT STRUCTURE, APPROX 16" OC AT 2" STANDARD 2" X 2" WALL LEDGER ANGLE TO CONNECT CEILING ASSEMBLY TO TO WALL (TYP).

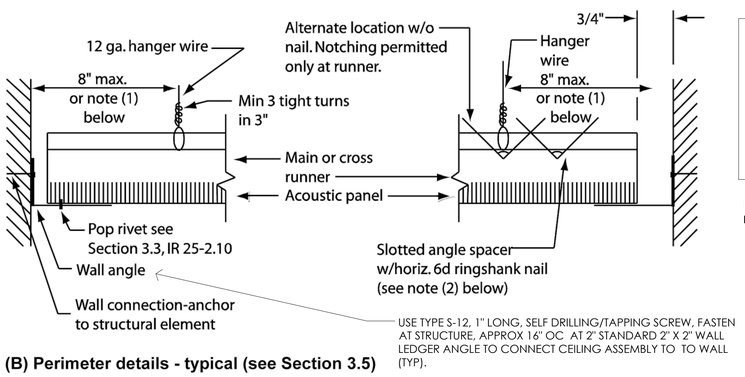

(B) Perimeter details - typical (see Section 3.5)

Notes: (1) 1/4 of the length of the end runner whichever is less.
(2) Nails at the end of horizontal struts are to be placed with nail head toward centerline of span of strut.
(3) Hanger wire not required for cross runners less than 8" long between main runner and wall.

11 PERIMETER DETAILS (TYP.)

NTS

TABLE 2—DONN COMPRESSION POST

TYPE	TUBE LENGTHS (inches)		OVERALL COMPRESSION POST LENGTH (inches)	
	1-inch Diameter	3/4-inch Diameter	Minimum	Maximum
VSA 18/30	17	17	18	30
VSA 30/48	24	30	30	48
VSA 48/84	48	40	48	84
VSA 84/102	72	40	84	102

For **SI:** 1 inch = 25.4 mm.

05A COMPRESSION STRUT SIZING CHART (TYP)

NTS

CEILING HANGER DETAILS

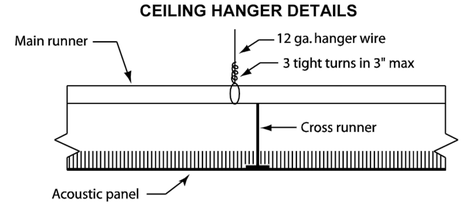

05 HANGER GRID DETAIL (TYP)

NTS

Note:
See Figures 3, 4, 5, or 6 for connections of bracing and hanger wire to the structure above

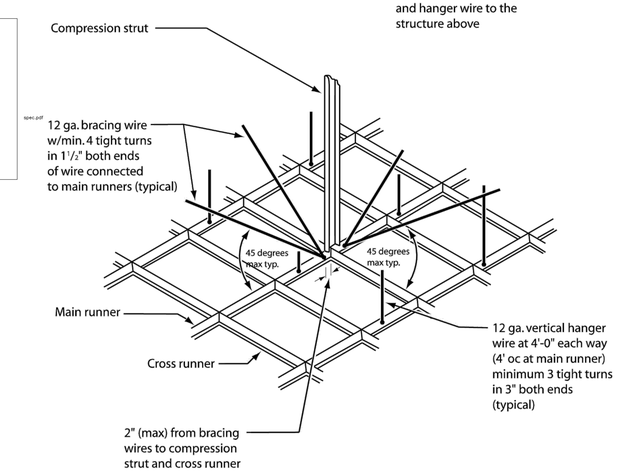

02 COMPRESSION STRUT DETAIL (TYP)

NTS

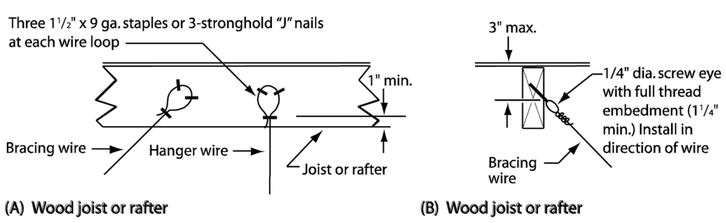

(A) Wood joist or rafter

(B) Wood joist or rafter

(C) Wood joist or block

(D) At bottom of joist

Notes: (1) Do not insert screw eyes parallel to laminations
(2) When fire rated gyp board is installed on the bottom flanges, use screw eyes w/ sufficient length to avoid damaging the fire rated gyp board.

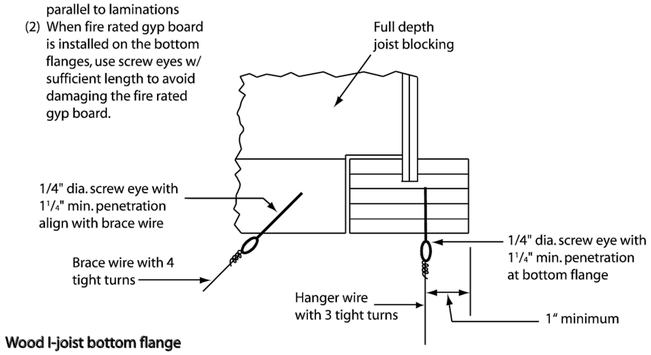

(H) Wood I-joist bottom flange

10 ACCEPTABLE DETAILS - WIRE CONNECTIONS TO WOOD FRAMING

NTS

OWNER:

Solano Community College District
2000 North Village Parkway
Vacaville, CA 95688

ARCHITECT:

CA ARCHITECTS
475 Gate Five Road, Suite 107
Sausalito, CA 94965
T 415.331.7655
F 415.331.7656

PROJECT:

Vacaville Classroom Building (Annex) Renovation Project

CONSULTANT TEAM:

STAMP

LICENSED ARCHITECT JOSHUA COHN C 23410 REN. 11-30-17 STATE OF CALIFORNIA

SHEET LEGEND:

ISSUE/REVISION:

NO:	DATE:	DESCRIPTION:
	04/25/2017	ISSUE FOR DD 100%
	06/06/2017	ISSUE FOR CD 50%
	06/30/2017	ISSUE FOR CD 60%
	07/20/2017	ISSUE FOR CD 100%
	10/18/2017	DSA BACKCHECK

KEY PLAN:

FILE: 48-C1
IDENTIFICATION STAMP
DIVISION OF THE STATE ARCHITECT
02-116082
AC TCC FLS GBC SS PVL
DATE: 10/31/2017

SCALE:
DATE:
PROJECT NO:
PERMIT APPLICATION NO.:

INTERIOR DETAILS

A9.03

GENERAL NOTES

1. THE WORK INCLUDES THE FURNISHING OF ALL LABOR AND MATERIALS FOR THE COMPLETE INSTALLATION OF ALL ELECTRICAL SYSTEMS AND EQUIPMENT REFERRED TO, IMPLIED OR SHOWN ON THE DRAWINGS EXCEPT SUCH MATERIALS AND EQUIPMENT AS MAY BE SPECIFIED OR INDICATED TO BE PROVIDED BY OTHERS.

2. THE ELECTRICAL CONTRACTOR SHALL VISIT JOB SITE AND VERIFY FIELD CONDITIONS BEFORE BIDDING AND SHALL INCLUDE IN HIS BID THE NECESSARY COSTS TO CONSTRUCT THIS PROJECT IN ACCORDANCE WITH THE INTENT OF THE ELECTRICAL DRAWINGS AND ALL APPLICABLE CODES. ELECTRICAL CONTRACTOR SHALL ALLOW FOR DEMOLITION WORK NECESSARY FOR A COMPLETE INSTALLATION OF THE NEW ELECTRICAL EQUIPMENT.

3. THE ELECTRICAL CONTRACTOR SHALL PERFORM HIS WORK IN ACCORDANCE WITH ALL CODES, RULES AND REGULATIONS OF GOVERNING AGENCIES HAVING JURISDICTION, ALL OF WHICH ARE HEREBY MADE A PART OF THE PLANS. THE CONTRACTOR SHALL OBTAIN NECESSARY PERMITS, HAVE WORK INSPECTED AND PAY FOR THE SAME. UPON COMPLETION OF WORK, THE CONTRACTOR SHALL DELIVER TO OWNER A "CERTIFICATE OF INSPECTION" APPROVED BY THE LOCAL AUTHORITY HAVING JURISDICTION.

4. LOCATION OF ALL EQUIPMENT AND OUTLETS AS SHOWN ON THE DRAWINGS ARE APPROXIMATELY ONLY, EXCEPT WHERE DIRECTED BY DIMENSIONS, HEIGHT OR DETAILS. CONFIRM LOCATIONS BY REFERENCE TO ARCHITECTURAL, AND EQUIPMENT DETAILS AND VERIFY WITH ARCHITECT.

5. THE ELECTRICAL CONTRACTOR SHALL INFORM HIMSELF PRIOR TO SUBMISSION OF BIDS AS TO THE ELECTRICAL WORK REQUIRED BY OTHER SECTIONS OF THE PLANS, SUCH AS THE ARCHITECTURAL, MECHANICAL, ETC. AND INCLUDE THOSE ITEMS INDICATED TO BE PROVIDED BY THE ELECTRICAL CONTRACTOR OR "BY OTHERS".

6. THE ARCHITECTURAL DRAWINGS TAKE PRECEDENCE OVER THE ELECTRICAL DRAWINGS IN THE REPRESENTATION OF THE GENERAL CONSTRUCTION WORK AND THE DRAWINGS OF THE VARIOUS TRADES TAKE PRECEDENCE IN THE REPRESENTATION OF THE WORK OF THOSE TRADES. THE CONTRACTOR SHALL REFER TO ALL DRAWINGS TO COORDINATE THE ELECTRICAL WORK WITH THE WORK DONE ON OTHER TRADES.

7. THE ARCHITECT RESERVES THE RIGHT TO MOVE ANY OUTLETS WITHIN THE RADIUS OF SIX FEET WITHOUT ADDITIONAL EXPENSES TO THE OWNER. NO ALLOWANCE WILL BE MADE FOR EXTRAS FOR ANY CHANGES IN LOCATIONS EXCEPT WHERE EQUIPMENT HAS BEEN SET AND CONNECTED BEFORE ANY CHANGE IS ORDERED AND THEN ONLY WHEN SUCH CHANGE IS IN WRITING.

8. THE SIZE AND LOCATION OF EQUIPMENT IS SHOWN TO SCALE WHENEVER POSSIBLE, BUT THE CONTRACTOR SHALL MAKE USE OF ALL DATA IN ALL THE CONTRACT DOCUMENTS AND SHALL VERIFY THIS INFORMATION.

9. IT SHALL BE THE RESPONSIBILITY OF THE CONTRACTOR TO INSTALL TH E CONDUITS WITH MINIMUM NUMBER OF BENDS IN SUCH A MANNER AS TO CONFORM TO THE STRUCTURES, AVOID OBSTRUCTIONS, MAINTAIN HEAD ROOM, DEEP OPENINGS AND PASSAGEWAYS CLEAR, BE COMPATIBLE WITH LATEST CONSTRUCTION METHOD, AND MEET ALL STRUCTURAL CODE REQUIREMENTS. FURNISH AND INSTALL PULL BOX AS NECESSARY FOR LONG CONDUIT RUNS.

10. ALL ELECTRICAL OUTLETS, MOTORS, DEVICES, APPARATUS, EQUIPMENT FIXTURES AND APPLIANCES WHEREVER INSTALLED, "BY OTHERS", SHALL BE FULLY CONNECTED TO THE PROPER ELECTRICAL SOURCES AND CONTROLS AND LEFT IN OPERATIONAL CONDITION.

11. WHERE CONNECTIONS ARE SPECIFIED TO BE MADE TO EQUIPMENT FURNISHED BY OTHER DIVISIONS, OBTAIN THE REQUIRED ROUGH-IN DIMENSIONS AND CONNECTION DIAGRAMS FROM THE RESPECTIVE DIVISIONS FOR EACH ITEM AND ASSUME FULL RESPONSIBILITY FOR NEAT AND WORKMANLIKE INSTALLATION OF CONDUIT AND WIRE CONNECTION.

12. CONTRACTOR TO BE RESPONSIBLE FOR ALL ELECTRICAL GROUNDING AND BRACING REQUIREMENTS FOR EQUIPMENT.

13. THE COMPLETE INSTALLATION, INCLUDING THE NEUTRAL CONDUCTOR, METAL LIC CONDUIT AND RACEWAYS, BOXES, CABINETS AND EQUIPMENT, SHALL BE PERMANENTLY AND EFFECTIVELY GROUNDED IN ACCORDANCE WITH ALL CODE REQUIREMENTS, WHETHER OR NOT SUCH CONNECTIONS ARE SPECIFICALLY SHOWN AND/OR SPECIFIED.

14. EACH OUTLET SHALL BE TESTED AND BE PLACED IN WORKING ORDER BEFORE THE INSTALLATION SHALL BE CONSIDERED COMPLETE. ALL PARTS OF THE ELECTRICAL SYSTEM SHALL BE GUARANTEED TO PERFORM THE REQUIRED FUNCTION IN ACCORDANCE WITH THE PERFORMANCE REQUIREMENTS WHICH ARE INDICATED OR WHERE SUCH PARTICULAR REQUIREMENTS ARE NOT STATED, THEY SHALL PERFORM IN ACCORDANCE WITH THE PREVAILING RECOGNIZED TRADE STANDARDS OF PERFORMANCE. DURING THE PERIOD OF ONE YEAR REPAIRS OR REPLACEMENTS NECESSARY TO ACCOMPLISH THE REQUIRED PERFORMANCE.

15. IN THE EVENT OF FAILURE OF ANY WORK, EQUIPMENT OR SERVICE DURING THE LIFE OF THE GUARANTEE, CONTRACTOR SHALL REPAIR OR REPLACE THE DEFECTIVE WORK AND SHALL REMOVE, REPLACE OR RESTORE, AT NO COST TO OWNER, ANY PART OF THE STRUCTURE OR BUILDING WHICH MAY BE DAMAGED AS THE DIRECT RESULT OF HIS DEFECTIVE WORK OR MATERIAL.

16. ALL ELECTRICAL EQUIPMENT, FUSES AND CIRCUIT BREAKERS SHALL HAVE AN INTERRUPTING RATING NOT LESS THAN THE MAXIMUM SHORT CIRCUIT TO WHICH THEY MAY BE SUBJECTED.

17. ELECTRICAL CONTRACTOR SHALL SEE THAT ALL CONDUIT, METALLIC RACEWAYS DO NOT MAKE CONTACT WITH PLUMBING LINES AND MECHANICAL DUCTS.

18. THE CONTRACTOR SHALL BE LICENSED TO PERFORM THE WORK OUTLINED, TO BE FAMILIAR WITH ALL LOCAL CODES HAVING JURISDICTION AND TO HAVE REVIEWED THE DRAWINGS AND SPECIFICATIONS AND VERIFIED THAT ALL SYSTEMS CONTAINED THEREIN ARE IN COMPLIANCE WITH THOSE CODES HAVING JURISDICTION BY THE ACT OF SUBMITTING A BID. THE CONTRACTOR SHALL BE DEEMED TO HAVE ACCEPTED SUCH CONDITIONS AND RESPONSIBILITY AND TO HAVE MADE ALLOWANCES THEREFORE IN PREPARING HIS FIGURES SO THAT THERE WILL BE NO ADDITIONAL COSTS REQUESTED FOR ANY ADDITIONAL REQUIREMENTS MADE BY THOSE AGENCIES HAVING JURISDICTION.

19. ALL ELECTRICAL MATERIALS AND EQUIPMENT SHALL BE NEW UNLESS OTHERWISE NOTED ON DRAWINGS, AND LISTED BY UNDERWRITERS LABORATORIES.

20. SECONDARY WIRES AND CABLES SHALL BE SINGLE CONDUCTOR, RATED 600 VOLTS, TYPE THHN/THWN INSULATION, COLOR CODES PER INSPECTION AUTHORITY. ALL CONDUCTORS SHALL BE COPPER, NUMBER 12 AWG MINIMUM.

21. ALL WIRES AND CABLES SHALL BE INSTALLED IN ELECTRICAL METALLIC CONDUIT OR SURFACE METAL RACEWAY, UNLESS OTHERWISE NOTED.

22. MOUNTING, SUPPORTING, AND ANCHORING OF ALL ELECTRICAL EQUIPMENT SHALL BE IN STRICT COMPLIANCE WITH SEISMIC RESTRAINT REQUIREMENTS OF THE OFFICE OF THE STATE ARCHITECT.

23. ALL BRANCH CIRCUITS SHOWN ON DRAWING ARE NEW. PANELBOARD CIRCUIT DIRECTORY SHALL BE LABELED (TYPEWRITTEN) AS PER PANEL SCHEDULE.

26. PENETRATION OF FIRE RATED WALLS, CEILING, OR FLOOR SHALL COMPLY WITH 2016 C.B.C. REQUIREMENTS. PENETRATIONS ARE TO BE SEALED PROMPTLY USING APPROVED SEALANT TO INSURE THE INTEGRITY OF THE EXISTING FIRE RATING. FOAM TYPE AEROSOL SEALANT SHALL NOT BE USED.

27. ALL JUNCTION BOXES, PULL BOXES, CONDUITS ENTERING OR LEAVING AN AREA OR ROOM OR PASSING THROUGH A WALL OR FLOOR FOR BRANCH CIRCUITS SHALL BE CLEARLY MARKED WITH PERMANENT BLACK INK PEN IDENTIFYING THE BRANCH CIRCUIT CONTAINED.

26. CONTRACTOR SHALL BEAR FULL RESPONSIBILITY FOR MODIFICATION TO EXISTING WIRING IN PANELBOARD TO SUIT NEW CIRCUITRY.

27. CORING OR CUTTING IN WALLS OR SLABS REQUIRES PRIOR WRITTEN AUTHORIZATION AND SCHEDULING THROUGH THE ARCHITECT AND BUILDING OWNER AND MUST BE PERFORMED AFTER NORMAL BUILDING HOURS.

28. ALL METALLIC RACEWAYS, INCLUDING THE EXISTING, SHALL BE SECURELY FASTENED IN PLACE WITH APPROVED HANGERS NOT MORE THAN 10 FEET APART AND WITHIN 3 FEET OF EACH OUTLET BOX, JUNCTION BOX, DEVICE BOX, CABINET, CONDUIT BODY, OR OTHER RACEWAY TERMINATIONS.

29. SUBMITTALS: CATALOG CUTS SHALL BE SUBMITTED FOR ALL MATERIALS AND EQUIPMENT. SUBMIT MINIMUM 3 COPIES FOR REVIEW AND APPROVAL PRIOR TO INSTALLATION.

30. ELECTRICAL CONTRACTOR SHALL FURNISH AS-BUILT DRAWINGS TO THE OWNER AND ARCHITECT ON COMPLETION OF THE JOB.

31. DRAWINGS DO NOT NECESSARILY SHOW EVERY PULL BOX REQUIRED. ADDITIONAL BOXES MAY BE ADDED WHEN DESIRABLE TO SAVE LABOR AND AVOID DIFFICULTIES; AND WHEN CODE REQUIREMENTS LIMIT THE NUMBER OF BENDS BETWEEN BOXES. ADDITIONAL BOXES SHALL BE PROVIDED WITHOUT ADDED COST TO THE OWNER. BOXES SHALL BE SIZED ACCORDING TO CODE AND SHALL BE UNDERWRITER'S LABORATORIES LISTED. BOXES SHALL BE ACCESSIBLE AT THE TIME OF COMPLETION AND IN FINISHED AREAS SHALL BE LOCATED ONLY AFTER APPROVAL OF ARCHITECT DUE TO APPEARANCE CONSIDERATIONS.

32. ALL RECEPTACLE, LIGHT SWITCH, DISCONNECT SWITCH SHALL BE LABELED WITH CIRCUIT NUMBER AND PANEL NAME. LABEL SHALL BE WHITE BACKGROUND WITH BLACK LETTERING

33. ELECTRICAL CONTRACTOR SHALL PROVIDE ALL COMPLETE/SIGNED CALIFORNIA ENERGY COMMISSION ACCEPTANCE FORMS "CEC-NRCA" AND INSTALLATION FORMS "CEC-NRCI" ASSOCIATED WITH ALL LIGHTNG AND POWER DESIGN IN THESE DESIGN DRAWINGS, AND SHALL INCLUDE ALL FEE ASSOCIATED WITH THE COMPLETION OF THESE FORMS IN THE BID.

34. SOLANO COMMUNITY COLLEGE DISTRICT DESIGN STANDARD SHALL BE FOLLOW AND TAKE PRECEDENT OVER ELECTRICAL NOTES/SPECS. ON THESE PLAN, APPLICABLE SECTIONS ARE, BUT NOT LIMITED TO THE FOLLOWING;
26 00 00 – BASIC ELECTRICAL SYSTEMS
26 05 19 – WIRES CABLES AND CONNECTORS
26 05 26 – GROUNDING
26 05 33 – RACEWAYS
26 05 34 – BOXES
26 05 48 – SUPPORTING DEVICES
26 05 53 – ELECTRICAL IDENTIFICATION
26 08 05 – ELECTRICAL ACCEPTANCE TESTING
26 22 00 – DRY-TYPE TRANSFORMERS
26 24 00 – SWITCHBOARDS & DISTRIBUTION PANELS
26 27 26 – WIRING DEVICES
26 28 00 – OVERCURRENT PROTECTIVE DEVICES
26 28 19 – CIRCUIT & MOTOR DISCONNECTS

35. ALL ELECTRICAL COMPONENT SHALL BE ANCHORED OR BRACED TO MEET THE FORCE AND DISPLACEMENT REQUIREMENTS PRESCRIBED IN THE 2016 CBC, SECTIONS 1616A.1.18 THROUGH 1616A.1.26 AND ASCE 7-10 CHAPTER 13, 26 AND 30.

ABBREVIATIONS

AC.	ABOVE COUNTER
AFF	ABOVE FINISHED FLOOR
TEL	TELEPHONE
C	CONDUIT
TYP	TYPICAL
C.O.	CONDUIT ONLY
U.O.N.	UNLESS OTHERWISE NOTED
C.B	CIRCUIT BREAKER
CKT	CIRCUIT
DWG	DRAWING
ELEC	ELECTRICAL
ELR	END OF LINE REGISTER
EM	EMERGENCY
GB	GARBAGE DISPOSAL
GFI	GROUND FAULT INTERRUPTER
I.G.	ISOLATED GROUND
LCP	LIGHTING CONTROL PANEL.
N.I.C.	NOT IN CONTRACT
OFCI	OWNER FURNISH, CONTRACTOR INSTALL
PNL	PANELBOARD
REF	REFRIGERATOR
SAD	SEE ARCHITECTURAL DRAWINGS
SMD	SEE MECHANICAL DRAWINGS
TBD	TO BE DETERMINED
WP	WEATHER PROOF
(R)	RELOCATED
(N)	NEW
(E)	EXISTING TO REMAIN, U.O.N.

DL	LIGHTING DAYLIGHT SENSOR
NB	LIGHTING NETWORK BRIDGE
RC	LIGHTING ROOM/ZONE CONTROLLER
OS	OCCUPANCY SENSOR

DRAWING INDEX

E0.10	GENERAL NOTES, ABBREVIATIONS AND LEGEND
E0.11	ELECTRICAL SPECIFICATIONS
E0.30	ENERGY COMPLIANCE FORMS
E0.40	ENERGY COMPLIANCE FORMS
E0.50	ENERGY COMPLIANCE FORMS
E0.60	ENERGY COMPLIANCE FORMS
E1.00	POWER PLAN – GROUND FLOOR
E1.01	POWER PLAN – ROOF
E2.00	LIGHTING PLAN
E3.00	ELECTRICAL WIRING DIAGRAMS

LEGEND

- BUILDING STANDARD □UAD / DUPLEX RECEPTACLE AT 18" AFF TO CENTER OF BOX, U.O.N LEVITON T5825-W, 20A, 125V
- SPLIT-WIRED DUPLEX RECEPTACLE
- 208V — 208 VOLT RECEPTACLE
- 240V — 240 VOLT RECEPTACLE
- GFI — GROUND FAULT CIRCUIT INTERRUPTER RECEPTACLE AT 18" AFF TO CENTER OF BOX.
- D. — RECEPTACLE ON DEDICATED CIRCUIT AT 18" AFF TO CENTER OF BOX, U.O.N.
- CEILING MOUNTED RECEPTACLE.
- FLOOR MOUNTED RECEPTACLE.
- DIMMING SWITCH AT 48" AFF TO TOP OF BOX
- $\$_x$ — LIGHT SWITCH AND SWITCH LEG IDENTIFICATION AT 48"AFF TO TOP OF BOX
- $ — BUILDING STANDARD HORSEPOWER RATED SWITCH. LEVITON 1221-2W, 20A, 120/277V AT 48" AFF TO TOP OF BOX
- DATA / VOICE OUTLET BOX AT 18" AFF TO CENTER OF BOX.
- FLOOR MOUNTED DATA / VOICE OUTLET BOX
- LIGHTING CONTROL PANEL
- SURFACE / FLUSH MTD. PANELBOARD.
- J — WALL MOUNTED / CEILING MOUNTED JUNCTION BOX.
- L — BUILDING STANDARD CEILING/WALL MOUNTED STROBE HORN.
- L — BUILDING STANDARD STROBE.
- EM — CEILING MOUNTED EXIT LIGHT
- EXIT EM — LOW LEVEL WALL MOUNTED EXIT LIGHT
- TELEPHONE CABINET
- E□ X — E□UIPMENT TAG
- X — SHEET NOTE TAG.
- EPO — ENERGEBCY POWER OFF BUTTON WITH COVER
- ED — EMON DMON WATT METER
- HD — CEILING HEAT DETECTOR
- EMERGENCY LIGHT WITH BATTERY BACK UP

OWNER:
Solano Community College District
2000 North Village Parkway
Vacaville, CA 95688

ARCHITECT:
CA ARCHITECTS
475 Gate Five Road, Suite 107
Sausalito, CA 94965
T 415.331.7655
F 415.331.7656

PROJECT:
Vacaville Classroom Building (Annex) Renovation Project

CONSULTANT TEAM:

STAMP

REGISTERED PROFESSIONAL ENGINEER
DENNIS P.S. CHEUNG
No.9279
EXP.09/30/17
ELECTRICAL
STATE OF CALIFORNIA

SHEET LEGEND:

ISSUE/REVISION:

NO: DATE:	DESCRIPTION:
04/25/2017	ISSUE FOR DD 100%
06/06/2017	ISSUE FOR CD 50%
06/30/2017	ISSUE FOR CD 60%
07/20/2017	ISSUE FOR CD 100%
10/18/2017	DSA RESUBMIT

KEY PLAN:

FILE: 48-C1
IDENTIFICATION STAMP
DIVISION OF THE STATE ARCHITECT
02-116082
AC JCC FLS GBC SS PVL
DATE: 10/31/2017

SCALE: NO SCALE
DATE:
PROJECT NO:
PERMIT APPLICATION NO.:

GENERAL NOTES, ABBREV. & LEGEND

E0.10

DSA RESUB. SET

ELECTRICAL SPECIFICATIONS

A. GENERAL

1. THE "GENERAL CONDITIONS" AND "GENERAL REQUIREMENTS" OF THE ARCHITECTURAL SPECIFICATIONS GOVERN WORK UNDER ELECTRICAL.

2. PROVIDE ALL LABOR, MATERIALS, EQUIPMENT AND SERVICES TO CONSTRUCT AND INSTALL COMPLETE NEW ELECTRICAL SYSTEMS AS DESCRIBED HEREIN AND SHOWN ON THE DRAWINGS.

3. ANY APPARATUS, APPLIANCE, MATERIAL OR WORK NOT SHOWN ON DRAWINGS BUT MENTIONED IN THE SPECIFICATIONS, OR VICE VERSA, OR ACCESSORIES NECESSARY TO MAKE THE WORK COMPLETE IN ALL RESPECTS AND READY FOR OPERATION, EVEN IF NOT PARTICULARLY SPECIFIED, SHALL BE FURNISHED AND INSTALLED BY THE CONTRACTOR WITHOUT ADDITIONAL EXPENSE TO THE OWNER.

4. DESIGN DRAWINGS ARE DIAGRAMMATIC AND DO NOT SHOW ALL OFFSETS, BENDS, ELBOWS OR OTHER SPECIFIC ELEMENTS WHICH MAY BE REQUIRED FOR PROPER INSTALLATION OF WORK. SUCH WORK SHALL BE VERIFIED AT THE JOB SITE AND THE REQUIRED ACCESSORIES AND ROUTING SHALL BE PROVIDED TO COMPLETE THE WORK AT NO ADDITIONAL COST TO THE OWNER. THE RIGHT IS RESERVED TO MAKE ANY REASONABLE CHANGES IN OUTLET, LIGHTING OR EQUIPMENT LOCATIONS, PRIOR TO ROUGH-IN WITHOUT ANY ADDITIONAL COST TO THE OWNER. "REASONABLE CHANGE" BE INTERPRETED AS INCLUDING ANY CHANGES OF UP TO SIX FEET FROM THE LOCATIONS INDICATED ON THE DRAWINGS.

5. CONTRACTOR SHALL GIVE ALL NECESSARY NOTICES, OBTAIN ALL PERMITS AND PAY ALL TAXES, FEES AND OTHER COSTS IN CONNECTION WITH THIS WORK. HE SHALL OBTAIN ALL REQUIRED CERTIFICATES OF INSPECTION FOR HIS WORK AND DELIVER SAME TO THE OWNER BEFORE REQUEST FOR ACCEPTANCE AND FINAL PAYMENT FOR THE WORK.

6. WORK AND MATERIALS SHALL CONFORM TO THE LATEST RULES OF THE NATIONAL BOARD OF FIRE UNDERWRITERS' CODE, REGULATIONS OF THE STATE FIRE MARSHAL, AND WITH APPLICABLE LOCAL AND STATE CODES. NOTHING IN THESE SPECIFICATIONS SHALL BE CONSTRUED TO PERMIT WORK NOT CONFORMING TO THE MOST STRINGENT APPLICABLE CODES.

7. THE CALIFORNIA ELECTRICAL CODE, CALIFORNIA BUILDING CODE PLUS ANY APPLICABLE LOCAL AMENDMENTS TO THE FOREGOING CODES, AND ELECTRICAL REQUIREMENTS ESTABLISHED BY THE STATE AND LOCAL FIRE MARSHALS ARE HEREBY MADE PART OF THESE SPECIFICATIONS. THE CONTRACTOR SHALL NOTIFY THE OWNER OF ANY PART OF THE WORK HE BELIEVES TO BE IN CONFLICT WITH THESE CODES AND REGULATIONS.

8. ELECTRICAL DRAWINGS ARE ARRANGED FOR CONVENIENCE ONLY AND DO NOT NECESSARILY DETERMINE WHICH TRADE PERFORMS THE VARIOUS PORTIONS OF THE WORK. THE CONTRACTOR SHALL PERFORM ALL NECESSARY WORK TO JOIN WITH OR RECEIVE WORK OF OTHER TRADES. WORK SHALL BE COORDINATED WITH ALL TRADES TO PROVIDE ADEQUATE CLEARANCE AND ELIMINATE CONFLICTS.

9. THE CONTRACTOR SHALL VISIT THE JOB SITE PRIOR TO SUBMITTING HIS PROPOSAL AND FAMILIARIZE HIMSELF WITH EXISTING SITE CONDITIONS. INFORMATION ON DRAWINGS RELATIVE TO EXISTING SITE CONDITIONS IS APPROXIMATE. DURING THE PROGRESS OF CONSTRUCTION, DEVIATIONS FOUND NECESSARY TO CONFORM TO ACTUAL CONDITIONS SHALL BE REPORTED TO THE OWNER. CONTRACTOR IS RESPONSIBLE FOR ANY DAMAGE CAUSED TO EXISTING SYSTEMS.

10. SHOP DRAWINGS SHALL BE SUBMITTED TO OWNER ON ALL MAJOR PIECES OF ELECTRICAL EQUIPMENT, INCLUDING LIGHT FIXTURES, STARTERS, CIRCUIT BREAKERS AND PANELBOARDS AND DEVICES. EACH ITEM OF THE SHOP DRAWINGS SHALL BE PROPERLY LABELED, INDICATING THE INTENDED SERVICE OF THE MATERIAL, THE PROJECT NAME AND THE ELECTRICAL CONTRACTOR'S NAME. WHEN AN ERROR IN THE SHOP DRAWINGS IS NOT DETECTED IN THE REVIEW, THIS DOES NOT GRANT THE CONTRACTOR PERMISSION TO PROCEED IN ERROR. REGARDLESS OF ANY INFORMATION CONTAINED IN THE SHOP DRAWINGS, THE REQUIREMENTS OF THE DRAWINGS AND SPECIFICATIONS MUST BE FOLLOWED, AND ARE NOT WAIVED OR SUPERSEDED IN ANY WAY BY THE SHOP DRAWING REVIEW.

11. THE ELECTRICAL CONTRACTOR SHALL MAINTAIN A SET OF DRAWINGS AT THE JOB SITE FOR THE EXCLUSIVE PURPOSE OF MAINTAINING A RECORD OF ALL WORK INSTALLED AND TO SHOW ANY DEVIATIONS FROM THE WORK INDICATED ON THE DRAWINGS. AT THE COMPLETION OF THE PROJECT, ONE SET OF REPRODUCIBLE DRAWINGS, SHOWING ALL AS-BUILT CONDITIONS, SHALL BE DELIVERED TO THE OWNER FOR ACCEPTANCE PRIOR TO FINAL PAYMENT.

12. THE RIGHT IS RESERVED TO INSPECT AND TEST ANY PORTION OF THE EQUIPMENT AND/OR MATERIALS DURING THE PROGRESS OF ITS ERECTION. THE CONTRACTOR SHALL TEST ALL WIRING AND CONNECTIONS FOR CONTINUITY AND GROUNDS BEFORE CONNECTING ANY FIXTURES OR EQUIPMENT. A FULL-SCALE WORKING TEST WITH ALL LIGHTS, EQUIPMENT, APPLIANCES, ETC., IN OPERATION SHALL BE MADE, IN THE PRESENCE OF THE OWNER OR HIS REPRESENTATIVE, AND THE ELECTRICAL SYSTEMS PROVEN SATISFACTORY FOR OPERATION AND FREE FROM DEFECTS. ANY DEFECTS FOUND SHALL BE REMEDIED IMMEDIATELY BY THE CONTRACTOR.

13. ON COMPLETION OF THE ENTIRE INSTALLATION, THE APPROVAL OF THE OWNER SHALL BE SECURED, COVERING THE INSTALLATION THROUGHOUT. THE CONTRACTOR SHALL OBTAIN AND PAY FOR A CERTIFICATE OF APPROVAL FROM THE PUBLIC AUTHORITIES HAVING JURISDICTION. A FINAL INSPECTION CERTIFICATE SHALL BE SUBMITTED TO THE OWNER PRIOR TO FINAL PAYMENT. ANY AND ALL COST INCURRED FOR FEES SHALL BE PAID FOR BY THE CONTRACTOR.

14. COORDINATE ALL OUTAGES AND CUT-OVERS WITH THE OWNER. POWER SHALL NOT BE INTERRUPTED TO THE OCCUPIED PORTIONS OF THE BUILDING DURING BUSINESS HOURS, EXCEPT BY SPECIAL PERMISSION OF THE OWNER.

15. PROVIDE UNDERWRITERS' LABORATORIES, INC. OR ETL TESTING LABORATORIES, INC. LISTED AND LABELED EQUIPMENT FOR ALL ITEMS FOR WHICH U.L CARRIES A LISTING OR LABELING, UNLESS ITEMS ARE SPECIFICALLY EXEMPTED.

B. RACEWAYS AND FITTINGS

1. METALLIC CONDUIT INCORPORATED IN ELECTRICAL WORK SHALL COMPLY WITH ALL CODES AND AMERICAN STANDARDS ASSOCIATION C80-1-1958 (NEMA-110) AND C80-3-1958 (NEMA-112).

2. RIGID CONDUIT SHALL BE OF THREADED TYPE, HOT DIP GALVANIZED STEEL OR ALUMINUM. ELECTRICAL METALLIC TUBING SHALL BE GALVANIZED STEEL AND MAXIMUM SIZE SHALL BE 2 INCHES. ALL STEEL CONDUIT SHALL BE PROTECTED BY AN OVERALL ZINC COATING. FLEXIBLE CONDUIT SHALL BE STEEL; MINIMUM 1/2 INCH SIZE, FITTINGS SHALL BE OF SCREWED WEDGE TYPE. NEOPRENE JACKETED LIQUIDTIGHT FLEXIBLE CONDUIT SHALL BE USED IN LOCATIONS EXPOSED TO WEATHER OR DAMPNESS AND FOR ALL MOTOR FINAL CONNECTIONS, WITH SUITABLE WATERPROOF FITTINGS.

3. EMT CONNECTORS AND COUPLINGS SHALL BE STEEL SET SCREW OR COMPRESSION TYPE; TYPE. CONDUIT TERMINATIONS 1-1/4 INCH OR LARGER SHALL BE EQUIPPED WITH APPROVED INSULATED BUSHINGS.
CRIMP-ON TYPE IS NOT ACCEPTABLE. CONNECTORS IN PLENUMS SHALL BE COMPRESSION

4. RIGID STEEL CONDUIT SHALL BE USED FOR RUNS LARGER THAN 2".

5. ELECTRICAL METALLIC TUBING MAY BE USED ONLY IN INTERIOR, DRY APPLICATIONS NOT SUBJECT TO PHYSICAL DAMAGE.

6. FLEXIBLE CONDUIT SHALL BE USED FOR FINAL CONNECTIONS TO ALL VIBRATING EQUIPMENT (INCLUDING TRANSFORMERS) AND RECESSED LIGHT FIXTURES. CONNECTIONS TO ROTATING EQUIPMENT SHALL BE WITH LIQUIDTIGHT FLEXIBLE CONDUIT WITH A MINIMUM 270 DEGREE BEND.

7. CONCEAL ALL CONDUIT WHEREVER POSSIBLE EXCEPT IN MECHANICAL OR ELECTRICAL EQUIPMENT AREAS. EXPOSED CONDUIT SHALL BE RUN PARALLEL WITH OR AT RIGHT ANGLES TO THE LINES OF THE BUILDING. CONDUIT CONCEALED IN CEILING SPACES SHALL BE RUN PARALLEL TO BUILDINGS LINES WHERE POSSIBLE.

8. CONDUIT SHALL BE SUPPORTED FROM THE BUILDING STRUCTURE; SUPPORTS FROM AIR CONDITIONING DUCTS OR PIPING SHALL NOT BE PERMITTED. SECURE ALL CONDUITS TO OUTLET BOXES, JUNCTION BOXES OR CABINETS WITH LOCKNUTS OUTSIDE AND LOCKNUTS WITH BUSHINGS INSIDE. REAM CONDUITS AFTER THREADS ARE CUT; ENDS SHALL BE CUT SQUARE AND SHALL BUTT SOLIDLY INTO COUPLINGS AND CONNECTORS.

9. CONDUITS SHALL BE CONTINUOUS FROM OUTLET TO OUTLET AND FROM OUTLETS TO CABINETS, JUNCTION OR PULL BOXES, AND SHALL ENTER AND BE SECURED AT ALL BOXES SO THAT EACH SYSTEM SHALL BE ELECTRICALLY CONTINUOUS THROUGHOUT.

10. A NYLON PULL CORD SHALL BE LEFT IN ALL CONDUITS IN WHICH PERMANENT WIRING IS NOT INSTALLED.

11. METAL-CLAD CABLE (MC) MAY BE USED ONLY IN INTERIOR, CONCEALED DRY APPLICATION WITHIN BUILDING AND FOR BRANCH CIRCUITS ONLY.

12. ANY ELECTRICAL RACEWAY PENETRATION THROUGH FIRE RATED WALLS SHALL SHALL BE SEAL WITH APPROVED FIRE RESISTANCE SEALANT.

C. WIRE AND CABLE

1. CONDUCTORS SHALL BE COPPER AND RATED AT NOT LESS THAN 600 VOLTS, EXCEPT FOR SIGNAL CABLE SPECIFICALLY RATED LOWER. FOR POWER AND LIGHTING, MINIMUM SIZE SHALL BE NUMBER 12 AWG; FOR SIGNAL CABLES NUMBER AND SIZE AS INDICATED. ALL WIRE NUMBER 8 AWG OR LARGER SHALL BE STRANDED.

2. FIXTURE EXTENSIONS SHALL BE NUMBER 12 AWG EXCEPT THOSE INDIVIDUAL FIXTURE EXTENSIONS THAT DO NOT EXCEED 4 FEET IN LENGTH MAY BE NUMBER 14 AWG. FIXTURE EXTENSIONS SHALL HAVE TEMPERATURE RATING TO CONFORM TO INDIVIDUAL FIXTURE REQUIREMENTS.

3. WIRING SHALL BE TYPE THWN OR THHN, MINIMUM 90 DEGREES C. INSULATION. FEEDERS SIZED NUMBER 2 AWG AND ABOVE SHALL BE TYPE THW, 90 DEGREES C. INSULATION, OR THHN (90ø RATED), AND SIZED PER TABLE 310.16 OF THE NEC & CEC.

4. SPECIAL PRE-MANUFACTURED CABLING SYSTEMS, SUCH AS MODULAR WIRING AND MC TYPE CABLE MAY BE USED IN THIS FACILITY EXCEPT FOR CABLING SERVING FIRE ALARM AND LIFE SAFETY SYSTEMS OR FUNCTIONS.

5. ALL WIRING SHALL BE COLOR CODED AS FOLLOWS: 120/208 VOLT SYSTEM PHASE "A" - BLACK; PHASE "B" - RED; PHASE "C" - BLUE; NEUTRAL-WHITE; GROUNDING CONDUCTOR - GREEN; ISOLATE GROUND - GREEN WITH YELLOW TRACE.

6. ALL WIRE AND CABLE SHALL BE INSTALLED IN RACEWAY EXCEPT AS SPECIFICALLY PERMITTED OTHERWISE. VERTICAL RUNS OF CABLE SHALL BE SUPPORTED AT JUNCTION AND PULL BOXES PER CODE REQUIREMENTS.

7. AT EACH FIXTURE OUTLET A LOOP OR END OF WIRE NOT LESS THAN 8" LONG SHALL BE LEFT FOR CONNECTION TO FIXTURES.

8. TELEPHONE/CABLES WILL BE FURNISHED AND INSTALLED TO EACH OUTLET SHOWN ON DRAWINGS BY ELECTRICAL CONTRACTOR.

9. TELEVISION CABLES WILL BE FURNISHED AND INSTALLED TO EACH OUTLET SHOWN ON DRAWINGS BY ELECTRICAL CONTRACTOR. COORDINATE WITH CABLE TV COMPANY FOR CABLE TERMINATIONS AND RECUIREMENTS.

D. SPLICES AND INSULATION

1. WIRE NUT CONNECTORS SHALL BE MANUFACTURED BY THOMAS & BETTS, 3M, IDEAL OR APPROVED EQUAL. COMPRESSION TYPE WIRE CONNECTORS SHALL BE MANUFACTURED BY THOMAS & BETTS, 3M OR APPROVED EQUAL. MECHANICAL SCREWED COMPRESSION TYPE CONNECTORS SHALL BE MANUFACTURED BY BURNDY, ILSCO OR APPROVED EQUAL.

2. JOINTS IN BRANCH CIRCUITS SHALL OCCUR ONLY WHERE SUCH CIRCUITS DIVIDE AND SHALL CONSIST OF ONE THROUGH CIRCUIT TO WHICH SHALL BE SPLICED THE BRANCH FROM THE CIRCUIT. NO SPLICES SHALL BE MADE IN CONDUCTORS EXCEPT AT OUTLET BOXES, JUNCTION BOXES AND SPLICE BOXES.

3. ALL JOINTS FOR POWER WIRING NO. 10 AWG OR SMALLER SHALL BE MADE WITH WIRE NUTS OR COMPRESSION TYPE CONNECTORS. JOINTS IN SIGNAL CABLES SHALL BE MADE ONLY WITH COMPRESSION TYPE CONNECTORS.

4. ALL JOINTS OR SPLICES FOR NO. 8 AWG OR LARGER SHALL BE MADE WITH A MECHANICAL COMPRESSION CONNECTOR. AFTER THE CONDUCTORS HAVE BEEN MADE MECHANICALLY AND ELECTRICALLY SECURE, THE ENTIRE JOINT OR SPLICE SHALL BE COVERED WITH TAPE TO MAKE THE INSULATION OF THE JOINT OR SPLICE EQUAL TO THE INSULATION OF THE CONDUCTORS.

E. WIRING DEVICES AND OUTLET BOXES

1. WIRING DEVICES SHALL BE LEVITON, DECORA SERIES OR APPROVED EQUAL. COLOR TO BE WHITE UNLESS OTHERWISE NOTED. WALL RECEPTACLE OUTLETS SHALL BE NEMA 5-20R (UNLESS OTHERWISE NOTED).

2. OUTLET BOXES FOR CONCEALED WORK SHALL BE ONE PIECE, PRESSED STEEL, KNOCKOUT TYPE WITH ZINC OR CADMIUM COATING. BOXES SHALL NOT BE SMALLER THAN 4 INCHES SQUARE NOMINAL SIZE EXCEPT WHERE LARGER SIZES ARE INDICATED. PROVIDE EXTENSION RINGS, PLASTER RINGS AND COVERS NECESSARY FOR FLUSH FINISH.

3. WALL TELEPHONE OUTLETS SHALL BE PRESSED STEEL SECTIONAL SWITCH BOXES.

4. MOUNT DEVICES IN APPROVED OUTLET BOXES WITH MOUNTING HEIGHTS INDICATED TO CENTER OF DEVICE. WHERE MORE THAN ONE WALL SWITCH IS INDICATED AT ONE LOCATION, SWITCHES SHALL BE GANGED UNDER A COMMON WALL PLATE. MORE THAN 6 SWITCHES AT ONE LOCATION SHALL BE GANGED IN TWO ROWS, ONE ABOVE THE OTHER.

5. BEFORE LOCATING OUTLET BOXES, CHECK ALL ARCHITECTURAL DRAWINGS FOR TYPE OF CONSTRUCTION AND TO MAKE SURE THAT THERE ARE NO CONFLICTS WITH OTHER EQUIPMENT.

6. BAR HANGERS SHALL BE USED TO SUPPORT OUTLET BOXES IN STUD OR FURRED PARTITIONS AND CEILINGS. SCREWS SHALL BE USED WITH EXPANSION SHIELDS FOR FASTENING TO CONCRETE OR MASONRY. PROVIDE APPROVED KNOCKOUT SEALS ON UNUSED OPEN KNOCKOUT HOLES.

F. PANELBOARDS LOADCENTERS AND CIRCUIT BREAKERS

1. PANELBOARDS LOADCENTERS SHALL BE SEQUENCE PHASED,FACTORY ASSEMBLED,WITH COPPER BUS, SIZED AS INDICATED ON DRAWINGS. PANELBOARDS SHALL BE CUTLER - HAMMER, SQUARE D, GE OR APPROVED EQUAL.

2. CABINET SHALL BE MINIMUM 20 INCHES WIDE UNLESS OTHERWISE NOTED. FRONT TRIM SHALL BE DEAD FRONT WITH HINGED DOOR, FLUSHED LOCKS AND CONTAIN A TYPEWRITTEN DIRECTORY BEHIND CLEAR PLASTIC IN A METAL FRAME.

3. PANELBOARDS OVER 22 INCHES WIDE SHALL HAVE DOOR-IN-DOOR CONSTRUCTION, FOR EASY ACCESS TO WIRING, AND THREE-POINT LOCKS ON BOTH DOORS. CABINETS, DOORS AND TRIMS SHALL BE FABRICATED FROM CODE GAUGE STEEL, WITH DOORS AND TRIMS PRIMED FOR FIELD PAINTING TO MATCH SURROUNDING WALL FINISHES.

4. MOLDED CASE CIRCUIT BREAKERS SHALL BE AS MANUFACTURED BY CUTLER-HAMMER, SQUARE D, OR G.E. WITH FRAME, TRIP AND SHORT CIRCUIT RATING AS INDICATED ON THE DRAWINGS.

5. CIRCUIT BREAKERS SHALL BE OF THE BOLT-ON TYPE MOUNTING. MULTI-POLE BREAKERS SHALL BE SINGLE DEVICES, IN ONE ENCLOSURE, WITH ONE OPERATING HANDLE AND COMMON TRIP.

6. MINIMUM RMS SYMMETRICAL RATING OF CIRCUIT BREAKERS SHALL MATCH EXISTING

7. PANELBOARDS SHALL BE MOUNTED PLUMB AND TRIM ADJUSTED TO BE VERTICAL AND COVERING ALL OPENINGS. TOP OF PANELBOARD SHALL BE MAXIMUM 6'-6" ABOVE FINISHED FLOOR. REMOVE ALL WIRING FROM PANEL BOARDS WHERE CIRCUITS ARE DELETED OR ABANDONED.

8. CIRCUIT BREAKER TERMINATIONS SHALL NOT BE DOUBLE LUGGED TO TAP OFF FOR ADDITIONAL CIRCUIT RUNS. ALL BRANCH CIRCUIT TAPS SHALL BE MADE OUTSIDE OF PANELS IN APPROPRIATE JUNCTION BOXES.

G. MOTOR DISCONNECT

1. DISCONNECTING DEVICES SHALL BE PROVIDED FOR EACH MOTOR. SWITCHES SHALL BE MOTOR-RATED, EXCEPT WHERE OTHERWISE INDICATED.

2. DISCONNECT SWITCHES FOR MOTORS RATED 1/2 HP OR LARGER SHALL BE UNFUSED (UNLESS OTHERWISE INDICATED), THREE POLE, 208 VOLTS IN NEMA GENERAL PURPOSE OR WEATHERPROOF ENCLOSURES.

3. SWITCHES FOR MOTORS LESS THAN 1/2 HP SHALL BE TOGGLE TYPE, QUICK MAKE AND BREAK, RATED AT 120 VOLTS, WITH THE NUMBER OF POLES REQUIRED, IN SURFACE MOUNT TYPE, NEMA 1 ENCLOSURES.

H. GROUNDING

1. PROVIDE ALL GROUNDING FOR ELECTRICAL SYSTEMS AND EQUIPMENT IN ACCORDANCE WITH ALL APPLICABLE CODES. INCLUDE, CONDUIT SYSTEM, MOTORS, SECONDARY NEUTRAL WIRE AND MISCELLANEOUS GROUNDS REQUIRED. GROUNDING LUGS, WHERE PROVIDED AS STANDARD MANUFACTURER'S ITEMS ON EQUIPMENT FURNISHED MAY BE USED. THE GROUNDING SYSTEM SHALL COMPLY WITH ARTICLE 250 OF THE NEC AND CEC

2. PROVIDE SEPARATE GREEN INSULATED EQUIPMENT GROUND CONDUCTOR IN ALL FLEXIBLE ELECTRICAL RACEWAYS. EFFECTIVELY GROUND ALL FIXTURES, PANELS, CONTROLS, MOTORS, DISCONNECT SWITCHES, AND NONCURRENT CARRYING METALLIC ENCLOSURES. USE BONDING JUMPERS, GROUNDING BUSHINGS, LUGS, BUSES, ETC., FOR THIS PURPOSE. PROVIDE GROUNDING BUSHINGS ON ALL FEEDER CONDUIT ENTRANCES TO PANELS AND EQUIPMENT ENCLOSURES AND BOND BUSHINGS TO ENCLOSURES WITH MINIMUM NO. 10 AWG CONDUCTOR. CONNECT THE EQUIPMENT GROUND TO THE BUILDING SYSTEM GROUND. USE THE SAME SIZE EQUIPMENT GROUND CONDUCTORS AS PHASE CONDUCTORS, UP THROUGH NO. 10 AWG. USE N.E.C. TABLE 250-95 FOR CONDUCTOR SIZE WITH PHASE CONDUCTORS NO. 8 AND LARGER, IF NOT SHOWN ON THE DRAWINGS.

3. RECEPTACLES: PERMANENTLY CONNECT THE GROUND TERMINAL ON EACH RECEPTACLE TO THE GREEN GROUND CONDUCTOR OR GROUNDED METAL RACEWAY SYSTEM WITH A GROUND WIRE.

4. MOTORS: CONNECT THE GROUND CONDUCTOR TO THE CONDUIT WITH AN APPROVED GROUNDING BUSHING, AND TO THE METAL FRAME WITH A BOLTED SOLDERLESS LUG. BOLTS, SCREWS AND WASHERS SHALL BE BRONZE OR CADMIUM PLATED STEEL.

5. GROUND CONDUCTORS SHALL BE 600 VOLT - NO. 12 AWG STRANDED COPPER MINIMUM, WITH GREEN INSULATION; AND SHALL BE CONTINUOUS FROM TERMINAL TO TERMINAL WITHOUT SPLICE.

I. JUNCTION AND PULL BOXES

1. DRAWINGS DO NOT NECESSARILY SHOW EVERY PULL BOX REQUIRED. ADDITIONAL BOXES MAY BE ADDED WHEN DESIRABLE TO SAVE LABOR AND AVOID DIFFICULTIES; AND WHEN CODE REQUIREMENTS LIMIT THE NUMBER OF BENDS BETWEEN BOXES. ADDITIONAL BOXES SHALL BE PROVIDED WITHOUT ADDED COST TO THE OWNER. BOXES SHALL BE SIZED ACCORDING TO CODE AND SHALL BE UNDERWRITERS' LABORATORIES LISTED. BOXES SHALL BE ACCESSIBLE AT THE TIME OF COMPLETION AND IN FINISHED AREAS SHALL BE LOCATED ONLY AFTER APPROVAL OF ARCHITECT DUE TO APPEARANCE CONSIDERATIONS.

2. ALL JUNCTION BOXES IN CEILING SPACES SHALL BE MARKED WITH BLACK MARKING PEN AS TO THE PANEL AND CIRCUITS PASSING THROUGH THE BOX.

J. LABELS

1. WHITE CORE BLACK ENGRAVED PLASTIC NAMEPLATES SHALL BE ATTACHED TO ALL EQUIPMENT (PANELBOARDS, STARTERS, ETC.) INDICATING EQUIPMENT, DESIGNATION AND VOLTAGE

2. ALL RECEPTACLES, LIGHT SWITCHES, DISCONNECT SWITCHES SHALL BE LABEL WITH PANEL NAME AND CIRCUIT NUMBER. LABELS SHALL BE WHITE BACKGROUND ADHESIVE LABEL WITH BLACK LETTERING

K. DEMOLITION

1. CONTRACTOR SHALL EXAMINE THE WORK SITE AND COMPARE IT WITH THE DRAWINGS AS THE CONDITIONS UNDER WHICH WORK IS TO BE PERFORMED. INSPECT EXISTING CONDITIONS TO OBTAIN A COMPLETE UNDERSTANDING OF HOW SYSTEMS ARE CONFIGURED, WHERE SYSTEMS CAN BE SAVED, AND WHAT CONSEQUENCES WILL OCCUR AS A RESULT OF DEMOLITION, PRIOR TO COMMENCING ANY DEMOLITION. NO ALLOWANCE SHALL BE SUBSEQUENTLY MADE FOR ANY EXTRA DUE TO FAILURE OR NEGLECT BY THIS SPECIFICATION TO MAKE SUCH EXAMINATION.

2. WORK INCLUDED: WORK COMPRISES DEMOLITION OF ELECTRICAL SYSTEMS AS REQUIRED FOR NEW WORK. CONTRACTOR SHALL FURNISH ALL LABOR, MATERIALS, APPARATUS, TOOLS, EQUIPMENT, TRANSPORTATION, TEMPORARY CONSTRUCTION AND SPECIAL SERVICES AS REQUIRED TO MAKE A COMPLETE DEMOLITION OF ELECTRICAL SYSTEM AS REQUIRE.

3. ITEMS REMOVED AS RESULT OF THE DEMOLITION WORK SHALL BE CONSIDERED AS DEBRIS AND SHALL BE DISPOSED OFF PROPERTY UNLESS OTHERWISE NOTED.

OWNER:

Solano Community College District
2000 North Village Parkway
Vacaville, CA 95688

ARCHITECT:

CA ARCHITECTS
475 Gate Five Road, Suite 107
Sausalito, CA 94965
T 415.331.7655
F 415.331.7656

PROJECT:

Vacaville Classroom Building
(Annex) Renovation Project

CONSULTANT TEAM:

STAMP

REGISTERED PROFESSIONAL ENGINEER
DENNIS P. S. FENG
No.9279
EXP. 09/30/17
ELECTRICAL
STATE OF CALIFORNIA

SHEET LEGEND:

ISSUE/REVISION:

NO:	DATE:	DESCRIPTION:
	04/25/2017	ISSUE FOR DD 100%
	06/06/2017	ISSUE FOR CD 50%
	06/30/2017	ISSUE FOR CD 60%
	07/20/2017	ISSUE FOR CD 100%
	10/18/2017	DSA RESUBMIT

KEY PLAN:

FILE: 48-C1

IDENTIFICATION STAMP
DIVISION OF THE STATE ARCHITECT

02-116082

AC TCC FLS GBC SS PVL

DATE: 10/31/2017

SCALE: NO SCALE
DATE:
PROJECT NO:
PERMIT APPLICATION NO.:

ELECTRICAL
SPECIFICATIONS

E0.11

DSA RESUB. SET

STATE OF CALIFORNIA
Electrical Power Distribution
CEC-NRCC-ELC-01-E (Revised 01/16) — CALIFORNIA ENERGY COMMISSION

CERTIFICATE OF COMPLIANCE	NRCC-ELC-01-E
Electrical Power Distribution	Page 1 of 4
Project Name: SCC – Vacaville Annex	Date Prepared: 4/14/2017

General Information

Project Address: 2000 NORTH VILLAGE PARKWAY VACAVILLE, CA 95688	Climate Zone: ZONE 3	Conditioned Floor Area : 6,296 SqFt Unconditioned Floor Area :

Building Type: ☒ Nonresidential ☐ High-Rise Residential ☐ Hotel/Motel
☒ Schools ☐ Relocatable Public Schools ☒ Conditioned Spaces ☐ Unconditioned Spaces
Phase of Construction: ☐ New Construction ☐ Addition ☒ Alteration

In the table below identify all applicable construction documents that specify the requirements for the scope of responsibility reported by this certificate. Use additional pages as needed to list all construction documents related to compliance of Section 130.5.

Document Number	Document Title/Descriptions (include description information for Table or Schedule if it contains compliance information)	Document Sheet # or Page #	Indicate which subsection of Section 130.5 is related to the document (e.g. 130.5(a) for service electrical metering)

Add Row | Remove Last

A. Service Electrical Metering

Check one of the three boxes below if the electrical power distribution system is in compliance with Section 130.5(a).

☐ For newly installed electrical service in newly constructed buildings, Service Electrical Metering is required according to Section 130.5(a). *Fill out Column 1 through 6 of table below.*

☐ For new or replacement electrical service equipment in existing buildings, Service Electrical Metering is required according to Section 141.0(b)2Pi. *Fill out Column 1 through 6 of table below.*

☒ EXCEPTION to Electrical Service Metering: Service or feeder for which the utility company provides a metering system that indicates instantaneous kW demand and kWh for a utility-defined period. *Fill out Column 1, 2 and 6 of table below with the compliance information.*

Fill out a separate line for each electrical service that is connected to the building.

Electrical Service Schedule	Electrical Service Rating	Metering Capabilities (check all that are present)				Exception to 130.5 (a)	Field Inspector
01	02	03	04	05	06	07	08
Electrical Service Designation/ Location/Description	kVA	Instantaneous (at the time) kW	Historical peak (kW)	Tracking kWh for a user-definable period	kWh per rate period	Utility metering system	Check that the metering complies
MAIN 200 AMP METER 277/480V, 3P	166 KVA	☐	☐	☐	☒	☒	☐
MAIN 400 AMP METER 277/480V, 3P	288 KVA	☐	☐	☐	☒	☒	☐

Add Row | Remove Last

STATE OF CALIFORNIA
Electrical Power Distribution
CEC-NRCC-ELC-01-E (Revised 01/16) — CALIFORNIA ENERGY COMMISSION

CERTIFICATE OF COMPLIANCE	NRCC-ELC-01-E
Electrical Power Distribution	Page 2 of 4
Project Name: SCC – Vacaville Annex	Date Prepared: 4/14/2017

B. Separation of Electrical Circuits for Electrical Energy Monitoring N/A

Check all boxes below if the electrical power distribution system is in compliance with Section 130.5(b).

☐ The electrical power distribution system meets the separation of electrical circuits for electrical energy monitoring requirement of Section 130.5(b). The electrical power distribution systems is designed so that measurement devices can monitor the electrical energy usage of load types according to TABLE 130.5-B.

☐ Describe the electrical power distribution system installed and the compliance method chosen in meeting the requirement of Section 130.5(b). Use the space below to include the information. Examples of compliance methods are detailed in Nonresidential Compliance Manual Chapter 8.

Fill out Column 1 thru 3 with the compliance information.

General Information	Electrical Power Distribution System information and Method of compliance	Electrical Service Rating	Enforcement Agency
01	02	03	04
Electrical Service Designation/Location/Description	Describe the electrical power distribution system installed and the compliance method used	kVA	Check that the system complies
			☐

Field Inspector Notes:

STATE OF CALIFORNIA
INDOOR LIGHTING
CEC-NRCC-LTI-01-E (Revised 04/16) — CALIFORNIA ENERGY COMMISSION

CERTIFICATE OF COMPLIANCE	NRCC-LTI-01-E
Indoor Lighting	(Page 1 of 6)
Project Name: SCC - Vacaville Annex	Date Prepared: 4/14/2017

A. General Information

Climate Zone: 3	Conditioned Floor Area: SQ.FT. Unconditioned Floor Area:					
Building Type:	☑	Nonresidential	☐	High-Rise Residential	☐	Hotel/Motel
☑ Schools	☐	Relocatable Public Schools	☑	Conditioned Spaces	☐	Unconditioned Spaces
Phase of Construction:	☐	New Construction	☐	Addition	☑	Alteration
Method of Compliance:	☐	Complete Building	☑	Area Category	☐	Tailored
Project Address:						

B. Lighting Compliance Documents (select yes for each document included)

For detailed instructions on the use of this and all Energy Efficiency Standards compliance documents, refer to the Nonresidential Manual published by the California Energy Commission.

YES	NO	COMP. DOC.	TITLE
◉	○	NRCC-LTI-01-E	Certificate of Compliance. All Pages required on plans for all submittals.
◉	○	NRCC-LTI-02-E	Lighting Controls, Certificate of Compliance, and PAF Calculation. All Pages required on plans for all submittals.
◉	○	NRCC-LTI-03-E	Indoor Lighting Power Allowance
○	◉	NRCC-LTI-04-E	Tailored Method Worksheets
○	◉	NRCC-LTI-05-E	Line Voltage Track Lighting Worksheets
○	◉	NRCC-LTI-06-E	Indoor Lighting Existing Conditions

STATE OF CALIFORNIA
Electrical Power Distribution
CEC-NRCC-ELC-01-E (Revised 01/16) — CALIFORNIA ENERGY COMMISSION

CERTIFICATE OF COMPLIANCE	NRCC-ELC-01-E
Electrical Power Distribution	Page 3 of 4
Project Name: SCC – Vacaville Annex	Date Prepared: 4/14/2017

C. Voltage Drop

Check all boxes below if he electrical power distribution system is in compliance with Section 130.5(c).

	Enforcement Agency Check that the system complies
☒ The electrical power distribution system meets the voltage drop requirement of Section 130.5(c). The maximum combined voltage drop on feeder conductors and branch circuit conductors to the farthest connected load or outlet, do not exceed 5%.	☐
☐ Voltage drop calculation documents showing compliance to Section 130.5(c) are submitted as part of the compliance document submittal.	☐

D. Circuit Controls for 120-Volt Receptacles and Controlled Receptacles

Check one or more boxes below for applicable requirements of Section 130.5(d) for the electrical power distribution system.

	Field Inspector Check that the system complies
☐ The control is capable of automatically shutting OFF the controlled receptacles when the space is typically unoccupied, either at the receptacle or circuit level. For the automatic time switch control, it incorporates an override control that allows the controlled receptacle to remain ON for no more than 2 hours when an override is initiated and an automatic holiday "shut-OFF" feature that turns OFF all loads for at least 24 hours and then resumes the normally scheduled operation. Countdown timer switches are not be used to comply with the automatic time switch control requirements. The controls meet the requirement of Section 130.5(d)1.	☐
☐ There is at least one controlled receptacle within 6 ft from each uncontrolled receptacle. Where receptacles are installed in modular furniture in open office area, at least one controlled receptacle is installed at each workstation. The receptacles meet the requirement of Section 130.5(d)2.	☐
☐ There are installed split wired receptacles with at least one controlled and one uncontrolled receptacle. Where receptacles are installed in modular furniture in open office area, at least one controlled receptacle is installed at each workstation. The receptacles meet the requirement of Section 130.5(d)2.	☐
☐ Permanent and durable marking for controlled receptacles or circuits to differentiate them from uncontrolled receptacles or circuits is provided. The markings meet the requirement of Section 130.5(d)3.	☐
☐ For hotel and motel guest rooms, there are controlled receptacles for at least one-half of the 120-volt receptacles in each guest room. Electric circuits serving controlled receptacles in guestrooms are installed to have captive key controls, occupancy sensing controls, or automatic controls so the power is switched off no longer than 30 minutes after the guest room has been vacated. The receptacles meet the requirement of Section 130.5(d)4.	☐
☐ Receptacles that are only for the following purposes are excepted from Section 130.5(d): - Receptacles specifically for refrigerators and water dispensers in kitchen areas. - Receptacles located a minimum of six ft above the floor that are specifically for clocks. - Receptacles for network copiers, fax machines, A/V and data equipment other than personal computers in copy rooms. - Receptacles on circuits rated more than 20 amperes. - Receptacles connected to an uninterruptible power supply (UPS) that are intended to be in continuous use, 24 hours per day/365 days per year, and are marked to differentiate them from other uncontrolled receptacles or circuits.	☐

STATE OF CALIFORNIA
Electrical Power Distribution
CEC-NRCC-ELC-01-E (Revised 01/16) — CALIFORNIA ENERGY COMMISSION

CERTIFICATE OF COMPLIANCE	NRCC-ELC-01-E
Electrical Power Distribution	Page 4 of 4
Project Name: SCC – Vacaville Annex	Date Prepared: 4/14/2017

DOCUMENTATION AUTHOR'S DECLARATION STATEMENT

1. I certify that this Certificate of Compliance documentation is accurate and complete.

Documentation Author Name: DENNIS CHEUNG	Documentation Author Signature:
Company: C&N ENGINEERS, INC.	Signature Date: 4/14/2017
Address: 391 SUTTER STREET, SUITE 202	CEA/ HERS Certification Identification (if applicable):
City/State/Zip: SAN FRANCISCO, CA 94108	Phone: 415–982–1828

RESPONSIBLE PERSON'S DECLARATION STATEMENT

I certify the following under penalty of perjury, under the laws of the State of California:
1. The information provided on this Certificate of Compliance is true and correct.
2. I am eligible under Division 3 of the Business and Professions Code to accept responsibility for the building design or system design identified on this Certificate of Compliance (responsible designer).
3. The energy features and performance specifications, materials, components, and manufactured devices for the building design or system design identified on this Certificate of Compliance conform to the requirements of Title 24, Part 1 and Part 6 of the California Code of Regulations.
4. The building design features or system design features identified on this Certificate of Compliance are consistent with the information provided on other applicable compliance documents, worksheets, calculations, plans and specifications submitted to the enforcement agency for approval with this building permit application.
5. I will ensure that a completed signed copy of this Certificate of Compliance shall be made available with the building permit(s) issued for the building, and made available to the enforcement agency for all applicable inspections. I understand that a completed signed copy of this Certificate of Compliance is required to be included with the documentation the builder provides to the building owner at occupancy.

Responsible Designer Name: DENNIS CHEUNG	Responsible Designer Signature:
Company : C&N ENGINEERS, INC.	Date Signed: 4/14/2017
Address: 391 SUTTER STREET, SUITE 202	License: E9279
City/State/Zip: SAN FRANCISCO, CA 94108	Phone: 415–982–1828

STATE OF CALIFORNIA
INDOOR LIGHTING
CEC-NRCC-LTI-01-E (Revised 04/16) — CALIFORNIA ENERGY COMMISSION

CERTIFICATE OF COMPLIANCE	NRCC-LTI-01-E
Indoor Lighting	(Page 2 of 6)
Project Name: SCC - Vacaville Annex	Date Prepared: 4/14/2017

C. Summary of Allowed Lighting Power

Conditioned and Unconditioned space Lighting must not be combined for compliance

	Indoor Lighting Power for Conditioned Spaces		Watts	Indoor Lighting Power for Unconditioned Spaces		Watts
01	**Installed** Lighting NRCC-LTI-01-E, Table H, page 5	+	10760	**Installed** Lighting NRCC-LTI-01-E, Table H, page 5	+	
02	Portable Only for Offices NRCC-LTI-01-E, Table G, page 4	+				
03	Minus Lighting Control Credits NRCC-LTI-02-E, page 2	-		Minus Lighting Control Credits NRCC-LTI-02-E, page 2	-	
04	Adjusted **Installed** Lighting Power (row 1 plus row 2 minus row 3)	=	10760	Adjusted **Installed** Lighting Power (row 1 minus row 3)	=	0
	Complies ONLY if **Installed** ≤ **Allowed** (Box 04 < Box 05)			Complies ONLY if **Installed** ≤ **Allowed** (Box 04 < Box 05)		
05	**Allowed** Lighting Power Conditioned NRCC-LTI-03-E, page 1 Alterations with replacement luminaires that have at least 50/35%lower power compared to the original existing luminaires, may instead use the allowed wattage from NRCC-LTI-06, page 2		15995	**Allowed** Lighting Power Unconditioned NRCC-LTI-03-E, page 1 Alterations with replacement luminaires that have at least 50/35% lower power compared to the original existing luminaires, may instead use the allowed wattage from NRCC-LTI-06, page 2		

D. Declaration of Required Certificates of Installation

Declare by selecting yes for all of the Certificates that will be submitted. (Retain copies and verify forms are completed and signed.)

YES	NO	Form/Title	
◉	○	NRCI-LTI-01-E - Must be submitted for all buildings	☐ Field Inspector
◉	○	NRCI-LTI-02-E - Must be submitted for a lighting control system, or for an Energy Management Control System (EMCS), to be recognized for compliance.	☐ Field Inspector
○	◉	NRCI-LTI-03-E - Must be submitted for a line-voltage track lighting integral current limiter, or for a supplementary overcurrent protection panel used to energize only line-voltage track lighting, to be recognized for compliance.	☐ Field Inspector
○	◉	NRCI-LTI-04-E - Must be submitted for two interlocked systems serving an auditorium, a convention center, a conference room, a multipurpose room, or a theater to be recognized for compliance.	☐ Field Inspector
○	◉	NRCI-LTI-05-E - Must be submitted for a Power Adjustment Factor (PAF) to be recognized for compliance.	☐ Field Inspector
○	◉	NRCI-LTI-06-E - Must be submitted for additional wattage installed in a video conferencing studio to be recognized for compliance.	☐ Field Inspector

OWNER:

Solano Community College District
2000 North Village Parkway
Vacaville, CA 95688

ARCHITECT:

CA ARCHITECTS
475 Gate Five Road, Suite 107
Sausalito, CA 94965
T 415.331.7655
F 415.331.7656

PROJECT:

Vacaville Classroom Building
(Annex) Renovation Project

CONSULTANT TEAM:

STAMP

REGISTERED PROFESSIONAL ENGINEER
DENNIS P.S. CHEUNG
No.9279
EXP. 09/30/17
ELECTRICAL
STATE OF CALIFORNIA

SHEET LEGEND:

ISSUE/REVISION:

NO:	DATE:	DESCRIPTION:
	04/25/2017	ISSUE FOR DD 100%
	06/06/2017	ISSUE FOR CD 50%
	06/30/2017	ISSUE FOR CD 60%
	07/20/2017	ISSUE FOR CD 100%
	10/18/2017	DSA RESUBMIT

KEY PLAN:

FILE: 48-C1
IDENTIFICATION STAMP
DIVISION OF THE STATE ARCHITECT
02-116082
AC TCC FLS GBC SSPVL
DATE: 10/31/2017

SCALE:
DATE:
PROJECT NO:
PERMIT APPLICATION NO.:

ENERGY
COMPLIANCE FORMS

E0.30

DSA RESUB. SET

STATE OF CALIFORNIA
INDOOR LIGHTING
CEC-NRCC-LTI-01-E (Revised 04/16)
CALIFORNIA ENERGY COMMISSION

CERTIFICATE OF COMPLIANCE	NRCC-LTI-01-E
Indoor Lighting	(Page 3 of 6)
Project Name: SCC - Vacaville Annex	Date Prepared: 4/14/2017

E. Declaration of Required Certificates of Acceptance

Declare by selecting yes for all of the Certificates of Acceptance that will be submitted. (Retain copies and verify forms are completed and signed.)

YES	NO	FORM/TITLE	
○	○	NRCA-LTI-02-A - Must be submitted for occupancy sensors and automatic time switch controls.	☐ Field Inspector
◉	○	NRCA-LTI-03-A - Must be submitted for automatic daylight controls.	☐ Field Inspector
○	◉	NRCA-LTI-04-A - Must be submitted for demand responsive lighting controls.	☐ Field Inspector
○	◉	NRCA-LTI-05-A - Must be submitted for institutional tuning power adjustment factor (PAF).	

A Separate Lighting Schedule Must Be Filled Out for Conditioned and Unconditioned Spaces. Installed Lighting Power listed on this Lighting Schedule is only for: ☑ **CONDITIONED SPACE** ☐ **UNCONDITIONED SPACE**

F. Indoor Lighting Schedule and Field Inspection Energy Checklist

- ☑ The actual indoor lighting power listed on the next 2 pages includes all installed permanent and planned portable lighting systems.
- ☐ When Complete Building Method is used for compliance, list each different type of luminaire on separate lines.
- ☑ When Area Category Method or Tailored Method is used for compliance, list each different type of luminaire by each different function area on separate lines
- ☐ Also include track lighting in schedule, and submit the track lighting compliance document (NRCC-LTI-05-E) when line-voltage track lighting is installed.

STATE OF CALIFORNIA
INDOOR LIGHTING
CEC-NRCC-LTI-01-E (Revised 04/16)
CALIFORNIA ENERGY COMMISSION

CERTIFICATE OF COMPLIANCE	NRCC-LTI-01-E
Indoor Lighting	(Page 4 of 6)
Project Name: SCC - Vacaville Annex	Date Prepared: 4/14/2017

G. Installed Portable Luminaires in Offices – Exception to Section 140.6(a)

- This section shall be filled out ONLY for portable luminaires in offices (As defined in §100.1). All other planned portable luminaires shall be documented on next page of this compliance document.
- This section is used to determine if greater than 0.3 watts of portable lighting is planned for any office
- Fill out a separate line for each different office. Small offices that are typical (having the same general and portable lighting) may be grouped together. This allowance shall not be traded between offices having different lighting systems.

Office Portable Luminaire Schedule	Office Installed Portable Luminaire W/ft²							Office Location	Field Inspector	
01	02	03	04	05	06	07	08	09	10	
Complete Luminaire Description (i.e., LED, under cabinet, furniture mounted direct/indirect)	Watts per Luminaire	Number of Luminaires	Installed portable luminaire watts in this office (G02 x G03)	Square feet of this office	Watts per square foot (G04 / G05)	If G06 ≤ 0.3, enter zero; If G06 > 0.3, (G06-0.3)	(G05 x G07)	Identify Office area in which these portable luminaires are installed	Pass	Fail
			0				0		○	○
			0				0		○	○
			0				0		○	○
			0				0		○	○
			0				0		○	○
Total installed portable luminaire watts that are greater than 0.3 W/ft² per office:								Enter sum total of all pages into NRCC-LTI-01-E; Page 2		

STATE OF CALIFORNIA
INDOOR LIGHTING
CEC-NRCC-LTI-01-E (Revised 04/16)
CALIFORNIA ENERGY COMMISSION

CERTIFICATE OF COMPLIANCE	NRCC-LTI-01-E
Indoor Lighting	(Page 5 of 6)
Project Name: SCC - Vacaville Annex	Date Prepared: 4/14/2017

A Separate Lighting Schedule Must Be Filled Out for Conditioned and Unconditioned Spaces. Installed Lighting Power listed on this Lighting Schedule is only for:
☐ **CONDITIONED SPACE** ☐ **UNCONDITIONED SPACE**

H. Indoor Lighting Schedule and Field Inspection Energy Checklist

Luminaire Schedule		Installed Watts					Location	Field Inspector [1]	
01	02	03	04		05	06	07	08	
Name or Item Tag	Complete Luminaire Description (i.e, 3 lamp fluorescent troffer, F32T8, one dimmable electronic ballast)	Watts per Luminaire	How wattage was determined: CEC Default from NA8	How wattage was determined: According to §130.0(c)	Number Luminaires	Total Installed Watts in this area (H03 x H05)	Primary Function area in which these luminaires are installed	Pass	Fail
	2X4 Recessed dimmable LED	47	☐	☑	220	10340		○	○
	LED LINEAR DIMMABLE FIXTURES	42	☐	☑	10	420		○	○
			☐	☐		0		○	○
			☐	☐		0		○	○
			☐	☐		0		○	○
			☐	☐		0		○	○
			☐	☐		0		○	○
			☐	☐		0		○	○
			☐	☐		0		○	○
INSTALLED WATTS PAGE TOTAL:						10760	Enter sum total of all pages into NRCC-LTI-01-E; Page 2		

STATE OF CALIFORNIA
INDOOR LIGHTING
CEC-NRCC-LTI-01-E (Revised 04/16)
CALIFORNIA ENERGY COMMISSION

CERTIFICATE OF COMPLIANCE	NRCC-LTI-01-E
Indoor Lighting	(Page 6 of 6)
Project Name: SCC - Vacaville Annex	Date Prepared: 4/14/2017

DOCUMENTATION AUTHOR'S DECLARATION STATEMENT

1. I certify that this Certificate of Compliance documentation is accurate and complete.

Documentation Author Name: Dennis Cheung	Documentation Author Signature:
Company: C&N Engineers, Inc	Signature Date: 4/14/2017
Address: 391 Sutter Street, Suite 202	CEA Certification Identification (if applicable):
City/State/Zip: San Francisco, CA 94108	Phone: 415-982-1828

RESPONSIBLE PERSON'S DECLARATION STATEMENT

I certify the following under penalty of perjury, under the laws of the State of California:

1. The information provided on this Certificate of Compliance is true and correct.
2. I am eligible under Division 3 of the Business and Professions Code to accept responsibility for the building design or system design identified on this Certificate of Compliance (responsible designer).
3. The energy features and performance specifications, materials, components, and manufactured devices for the building design or system design identified on this Certificate of Compliance conform to the requirements of Title 24, Part 1 and Part 6 of the California Code of Regulations.
4. The building design features or system design features identified on this Certificate of Compliance are consistent with the information provided on other applicable compliance documents, worksheets, calculations, plans and specifications submitted to the enforcement agency for approval with this building permit application.
5. I will ensure that a completed signed copy of this Certificate of Compliance shall be made available with the building permit(s) issued for the building, and made available to the enforcement agency for all applicable inspections. I understand that a completed signed copy of this Certificate of Compliance is required to be included with the documentation the builder provides to the building owner at occupancy.

Responsible Designer Name: Dennis Cheung	Responsible Designer Signature:
Company : C&N Engineers, Inc	Date Signed: 4/14/2017
Address: 391 Sutter Street, Suite 202	License: E9279
City/State/Zip: San Francisco, CA 94108	Phone: 415-982-1828

OWNER:

Solano Community College District
2000 North Village Parkway
Vacaville, CA 95688

ARCHITECT:

CA ARCHITECTS
475 Gate Five Road, Suite 107
Sausalito, CA 94965
T 415.331.7655
F 415.331.7656

PROJECT:

Vacaville Classroom Building (Annex) Renovation Project

CONSULTANT TEAM:

STAMP

REGISTERED PROFESSIONAL ENGINEER
DENNIS P.S. CHEUNG
No.9279
EXP. 09/30/17
ELECTRICAL
STATE OF CALIFORNIA

SHEET LEGEND:

ISSUE/REVISION:

NO:	DATE:	DESCRIPTION:
	04/25/2017	ISSUE FOR DD 100%
	06/06/2017	ISSUE FOR CD 50%
	06/30/2017	ISSUE FOR CD 60%
	07/20/2017	ISSUE FOR CD 100%
	10/18/2017	DSA RESUBMIT

KEY PLAN:

FILE: 48-C1

IDENTIFICATION STAMP
DIVISION OF THE STATE ARCHITECT
02-116082
AC ICC FLS GBC ssPVL
DATE: 10/31/2017

SCALE:
DATE:
PROJECT NO:
PERMIT APPLICATION NO.:

ENERGY
COMPLIANCE FORMS

E0.40

DSA RESUB. SET

STATE OF CALIFORNIA
INDOOR LIGHTING – LIGHTING CONTROLS
CEC-NRCC-LTI-02-E (Revised 01/16)

CALIFORNIA ENERGY COMMISSION

CERTIFICATE OF COMPLIANCE	NRCC-LTI-02-E
Indoor Lighting - Lighting Controls	(Page 1 of 3)
Project Name: SCC - Vacaville Annex	Date Prepared: 4/14/2017

A. Mandatory Lighting Control Declaration Statements (Indicate if the measure applies by checking yes or no below.)

YES	NO	Control Requirements
◉	○	Lighting shall be controlled by self-contained lighting control devices which are certified to the Energy Commission according to the Title 20 Appliance Efficiency Regulations in accordance with Section 110.9.
◉	○	Lighting shall be controlled by a lighting control system or energy management control system in accordance with §110.9. An Installation Certificate shall be submitted in accordance with Section 130.4(b).
○	◉	One or more Track Lighting Integral Current Limiters shall be installed which have been certified to the Energy Commission in accordance with §110.9 and §130.0. Additionally, an Installation Certificate shall be submitted in accordance with Section 130.4(b).
○	◉	A Track Lighting Supplementary Overcurrent Protection Panel shall be installed in accordance with Section 110.9 and Section 130.0. Additionally, an Installation Certificate shall be installed in accordance with Section 130.4(b).
◉	○	All lighting controls and equipment shall comply with the applicable requirements in §110.9 and shall be installed in accordance with the manufacturer's instructions in accordance with Section 130.1.
◉	○	All luminaires shall be functionally controlled with manual ON and OFF lighting controls in accordance with Section 130.1(a).
◉	○	General lighting shall be separately controlled from all other lighting systems in an area. Floor and wall display, window display, case display, ornamental, and special effects lighting shall each be separately controlled on circuits that are 20 amps or less. When track lighting is used, general, display, ornamental, and special effects lighting shall each be separately controlled; in accordance with Section 130.1(a)4.
◉	○	The general lighting of any enclosed area 100 square feet or larger, with a connected lighting load that exceeds 0.5 watts per square foot shall meet the multi-level lighting control requirements in accordance with Section 130.1(b).
◉	○	All installed indoor lighting shall be equipped with controls that meet the applicable Shut-OFF control requirements in Section 130.1(c).
◉	○	Lighting in all Daylit Zones shall be controlled in accordance with the requirements in Section 130.1(d) and daylit zones are shown on the plans.
◉	○	Lighting power in buildings larger than 10,000 square feet shall be capable of being automatically reduced in response to a Demand Responsive Signal in accordance with Section 130.1(e).
◉	○	Before an occupancy permit is granted for a newly constructed building or area, or a new lighting system serving a building, area, or site is operated for normal use, indoor lighting controls serving the building, area, or site shall be certified as meeting the Acceptance Requirements for Code Compliance in accordance with Section 130.4.(a). The controls required to meet the Acceptance Requirements include automatic daylight controls, automatic shut-OFF controls, and demand responsive controls.

STATE OF CALIFORNIA
INDOOR LIGHTING – LIGHTING CONTROLS
CEC-NRCC-LTI-02-E (Revised 01/16)

CALIFORNIA ENERGY COMMISSION

CERTIFICATE OF COMPLIANCE	NRCC-LTI-02-E
Indoor Lighting - Lighting Controls	(Page 2 of 3)
Project Name: SCC - Vacaville Annex	Date Prepared: 4/14/2017

A separate document must be filled out for Conditioned and Unconditioned Spaces. This page is used only for the following:
☑ CONDITIONED SPACES ☐ UNCONDITIONED SPACES

B. Mandatory and Prescriptive Indoor Lighting Control Schedule, PAF Calculation, and Field Inspection Checklist

Lighting Control Schedule			Standards Complying With [1] (✓ all that apply, or leave empty if Exempted)							PAF Credit Calculation [2]			✓ if Acceptance Test Required	Field Inspector	
										Watts of Controlled Lighting	PAF	Control Credit (11 x 12)			
01	02	03	04	05	06	07	08	09	10	11	12	13	14	15	
Location in Building	Type/ Description of Lighting Control (i.e.: occupancy sensor, automatic time switch, dimmer, automatic daylight, etc…)	# of Units	§130.1(a)	§130.0(b)	§130.1(c)	§130.1(d)	§130.1(e)	§140.6(a)2	§140.6(d)					Pass	Fail
	OS/DIMMER/DL		◆	◆	◆	◆						0	☑	○	○
	OS/DIMMER		◆	◆	◆							0	☑	○	○
	OS/DIMMER		◆	◆	◆							0	☑	○	○
	OS/DIMMER		◆	◆	◆							0	☑	○	○
												0	☐	○	○
												0	☐	○	○
												0	☐	○	○
Control Credit PAGE TOTAL (Sum of Column 13):													0		
IF MULTIPLE PAGES ARE USED, ENTER SUM TOTAL OF Control Credit for all pages HERE (Sum of all Column 13):															
												Enter Control Credit total into NRCC-LTI-01-E; Page 1.			

1. §130.1(a) = Manual area controls; §130.0(b) = Multi Level; §130.1(c) = Auto Shut-Off; §130.1(d) = Mandatory Daylight; §130.1(e) = Demand Responsive; §140.6(d) = Additional lighting controls installed to earn a PAF; §140.6(d) = Prescriptive Secondary Sidelit Daylight Controls.
2. Check Table 140.6-A for correct Factor. PAFs shall not be traded between conditioned and unconditioned spaces. As a condition to earn a PAF, an Installation Certificate is also required to be filled out, signed, and submitted.

STATE OF CALIFORNIA
INDOOR LIGHTING – LIGHTING CONTROLS
CEC-NRCC-LTI-02-E (Revised 01/16)

CALIFORNIA ENERGY COMMISSION

CERTIFICATE OF COMPLIANCE	NRCC-LTI-02-E
Indoor Lighting - Lighting Controls	(Page 3 of 3)
Project Name: SCC - Vacaville Annex	Date Prepared: 4/14/2017

DOCUMENTATION AUTHOR'S DECLARATION STATEMENT

1. I certify that this Certificate of Compliance documentation is accurate and complete.

Documentation Author Name: Dennis Cheung	Documentation Author Signature:
Company: C&N Engineers, Inc	Signature Date: 4/14/2017
Address: 391 Sutter Street, Suite 202	CEA Certification Identification (if applicable):
City/State/Zip: San Francisco, CA 94108	Phone: 415-982-1828

RESPONSIBLE PERSON'S DECLARATION STATEMENT

I certify the following under penalty of perjury, under the laws of the State of California:
1. The information provided on this Certificate of Compliance is true and correct.
2. I am eligible under Division 3 of the Business and Professions Code to accept responsibility for the building design or system design identified on this Certificate of Compliance (responsible designer).
3. The energy features and performance specifications, materials, components, and manufactured devices for the building design or system design identified on this Certificate of Compliance conform to the requirements of Title 24, Part 1 and Part 6 of the California Code of Regulations.
4. The building design features or system design features identified on this Certificate of Compliance are consistent with the information provided on other applicable compliance documents, worksheets, calculations, plans and specifications submitted to the enforcement agency for approval with this building permit application.
5. I will ensure that a completed signed copy of this Certificate of Compliance shall be made available with the building permit(s) issued for the building, and made available to the enforcement agency for all applicable inspections. I understand that a completed signed copy of this Certificate of Compliance is required to be included with the documentation the builder provides to the building owner at occupancy.

Responsible Designer Name: Dennis Cheung	Responsible Designer Signature:
Company : C&N Engineers, Inc	Date Signed: 4/14/2017
Address: 391 Sutter Street, Suite 202	License: E9279
City/State/Zip: San Francisco, CA 94108	Phone: 415-982-1828

MEP Component Anchorage Note
All mechanical, plumbing, and electrical components shall be anchored and installed per the details on the DSA approved construction documents. Where no detail is indicated, the following components shall be anchored or braced to meet the force and displacement requirements prescribed in the 2016 CBC, Sections 1616A.1.18 through 1616A.1.26 and ASCE 7-10 Chapter 13, 26 and 30.

1. All permanent equipment and components.
2. Temporary or movable equipment that is permanently attached (e.g. hard wired) to the building utility services such as electricity, gas or water.
3. Movable equipment which is stationed in one place for more than 8 hours and heavier than 400 pounds or has a center of mass located 4 feet or more above the adjacent floor or roof level that directly support the component are required to be anchored with temporary attachments.

The following mechanical and electrical components shall be positively attached to the structure, but the attachment need not be detailed on the plans. These components shall have flexible connections provided between the component and associated ductwork, piping, and conduit.

A. Components weighing less than 400 pounds and have a center of mass located 4 feet or less above the adjacent floor or roof level that directly support the component.
B. Components weighing less than 20 pounds, or in the case of distributed systems, less than 5 pounds per foot, which are suspended from a roof or floor or hung from a wall.

For those elements that do not require details on the approved drawings, the installation shall be subject to the approval of the design professional in general responsible charge or structural engineer delegated responsibility and the DSA District Structural Engineer. The project inspector will verify that all components and equipment have been anchored in accordance with above requirements.

Piping, Ductwork, and Electrical Distribution System Bracing Note
Piping, ductwork, and electrical distribution systems shall be braced to comply with the forces and displacements prescribed in ASCE 7-10 Section 13.3 as defined in ASCE 7-10 Section 13.6.5.6, 13.6.7, 13.6.8, and 2016 CBC, Sections 1616A.1.24, 1616A.1.25 and 1616A.1.26.

The method of showing bracing and attachments to the structure for the identified distribution system are as noted below. When bracing and attachments are based on a preapproved installation guide (e.g., SMACNA or OSHPD OPM), copies of the bracing system installation guide or manual shall be available on the jobsite prior to the start of and during the hanging and bracing of the distribution systems. The Structural Engineer of Record shall verify the adequacy of the structure to support the hanger and brace loads.

Mechanical Piping (MP), Mechanical Ducts (MD), Plumbing Piping (PP), Electrical Distribution Systems (E):

MP☐MD☐PP☐ E☐ - Option 1: Detailed on the approved drawings with project specific notes and details.

MP☐MD☐PP☐ E☐ - Option 2: Shall comply with the applicable OSHPD Pre-Approval (OPM #) #_____.

MP☐MD☐PP☐ - Option 3: Shall comply with the SMACNA Seismic Restraint Manual, OSHPD Edition (2009), including any addenda. Fasteners and other attachments not specifically identified in the SMACNA Seismic Restraint Manual, OSHPD Edition, are detailed on the approved drawings with project specific notes and details. The details shall account for the applicable Seismic Hazard Level _____ and Connection Level _____ for the project and conditions.

OWNER:

Solano Community College District
2000 North Village Parkway
Vacaville, CA 95688

ARCHITECT:

CA ARCHITECTS
475 Gate Five Road, Suite 107
Sausalito, CA 94965
T 415.331.7655
F 415.331.7656

PROJECT:

Vacaville Classroom Building (Annex) Renovation Project

CONSULTANT TEAM:

STAMP

SHEET LEGEND:

ISSUE/REVISION:

NO:	DATE:	DESCRIPTION:
	04/25/2017	ISSUE FOR DD 100%
	06/06/2017	ISSUE FOR CD 50%
	06/30/2017	ISSUE FOR CD 60%
	07/20/2017	ISSUE FOR CD 100%
	10/18/2017	DSA RESUBMIT

KEY PLAN:

FILE: 48-C1
IDENTIFICATION STAMP
DIVISION OF THE STATE ARCHITECT
02-116082
AC ICC FLS GBC SSPVL
DATE: 10/31/2017

SCALE:
DATE:
PROJECT NO:
PERMIT APPLICATION NO.:

ENERGY
COMPLIANCE FORMS

E0.50

DSA RESUB. SET

STATE OF CALIFORNIA
INDOOR LIGHTING POWER ALLOWANCE
CEC-NRCC-LTI-03-E (Revised 04/16) — CALIFORNIA ENERGY COMMISSION

CERTIFICATE OF COMPLIANCE	NRCC-LTI-03-E
Certificate of Compliance - Indoor Lighting Power Allowance	(Page 1 of 4)
Project Name: SCC - Vacaville Annex	Date Prepared: 4/14/2017

A separate page must be filled out for Conditioned and Unconditioned Spaces. This page is only for:
☑ CONDITIONED spaces ☐ UNCONDITIONED spaces

A. SUMMARY TOTALS OF LIGHTING POWER ALLOWANCES

If using Complete Building Method for compliance, use only the total in column (a) as total allowed building watts.
If using Area Category Method, Tailored Method, or a combination of Area Category and Tailored Method for compliance, use only the total in column (b) as the total allowed building watts

	(a)		(b)
01 Complete Building Method Allowed Watts. Documented in section B of NRCC-LTI-03-E (below on this page)	0		
02 Area Category Method Allowed Watts. Documented in section C-1 of NRCC-LTI-03-E (below on this page)			15995
03 Tailored Method Allowed Watts. Documented in section A of NRCC-LTI-04-E			
TOTAL ALLOWED BUILDING WATTS. Enter number into correct cell on NRCC-LTI-01, Page 2, Row 1	0		15995

☐ Check here if building contains both conditioned and unconditioned areas.

B. COMPLETE BUILDING METHOD LIGHTING POWER ALLOWANCE

01	02		03		04
TYPE OF BUILDING (From §140.6 Table 140.6-B)	WATTS PER ft^2	X	COMPLETE BLDG. AREA	=	ALLOWED WATTS
					0
		Total Area:			
Total Watts. Enter Total Watts into section A, row 1 (Above on this page)					0

C -1 AREA CATEGORY METHOD TOTAL LIGHTING POWER ALLOWANCES	Watts
Total from section C-2.	15995
Total from section C-3.	
Total Watts. Enter Total Watts into section A, row 2 (Above on this page).	15995
For Alterations Only – Reduced lighting power option (Total Allowed Watts x 0.85). Enter this value into section A, row 2 if using this option.	

STATE OF CALIFORNIA
INDOOR LIGHTING POWER ALLOWANCE
CEC-NRCC-LTI-03-E (Revised 04/16) — CALIFORNIA ENERGY COMMISSION

CERTIFICATE OF COMPLIANCE	NRCC-LTI-03-E
Certificate of Compliance - Indoor Lighting Power Allowance	(Page 2 of 4)
Project Name: SCC - Vacaville Annex	Date Prepared: 4/14/2017

A separate page must be filled out for Conditioned and Unconditioned Spaces. This page is only for:
☑ CONDITIONED spaces ☐ UNCONDITIONED spaces

C -2 AREA CATEGORY METHOD GENERAL LIGHTING POWER ALLOWANCE

- Do not include portable lighting for offices. Portable lighting for offices shall be documented only in Section G of NRCC-LTI-01-E.
- Separately list lighting for each primary function area as defined in §100.1 of the Standards.

01		02		03		04
AREA CATEGORY (From §140.6 Table 140.6-C)		WATTS PER ft^2	X	AREA (ft^2)	=	ALLOWED WATTS
Location in Building	Primary Function Area per Table 140.6-C					
Ground floor	Classroom	1.2		8102		9722.4
	Lounge	0.9		1589		1430.1
	CORRIDOR/Restroom	0.6		1899		1139.4
	RECEPTION/LOBBY	0.95		281		266.95
	OFFICE	1.0		1822		1822
	ELECTRICAL / IT / COPY ROOM	0.55		390		214.5
	CONFERENCE ROOM	1.2		1166		1399.2
						0
						0
						0
						0
						0
						0
						0
						0
						0
						0
		TOTALS		15249		
Enter sum total Area Category allowed watts into section C-1 of NRCC-LTI-03-E (this compliance document)						15995
						WATTS

STATE OF CALIFORNIA
INDOOR LIGHTING POWER ALLOWANCE
CEC-NRCC-LTI-03-E (Revised 04/16) — CALIFORNIA ENERGY COMMISSION

CERTIFICATE OF COMPLIANCE	NRCC-LTI-03-E
Certificate of Compliance - Indoor Lighting Power Allowance	(Page 3 of 4)
Project Name: SCC - Vacaville Annex	Date Prepared: 4/14/2017

A separate page must be filled out for Conditioned and Unconditioned Spaces. This page is only for:
☐ CONDITIONED spaces ☐ UNCONDITIONED spaces

C-3 AREA CATEGORY METHOD ADDITIONAL LIGHTING WATTAGE ALLOWANCE (from Table 140.6-C Footnotes)

01	02	03 [2]	04	05	06	07
Primary Function	Sq Ft or Linear ft [1]	Additional Watts Allowed	Wattage Allowance (02 x 03)	Description(s) and Quantity of Special Luminaire Types in each Primary Function Area	Total Design Watts [3]	ALLOWED WATTS Smaller of 04 or 06
			0			
			0			
			0		

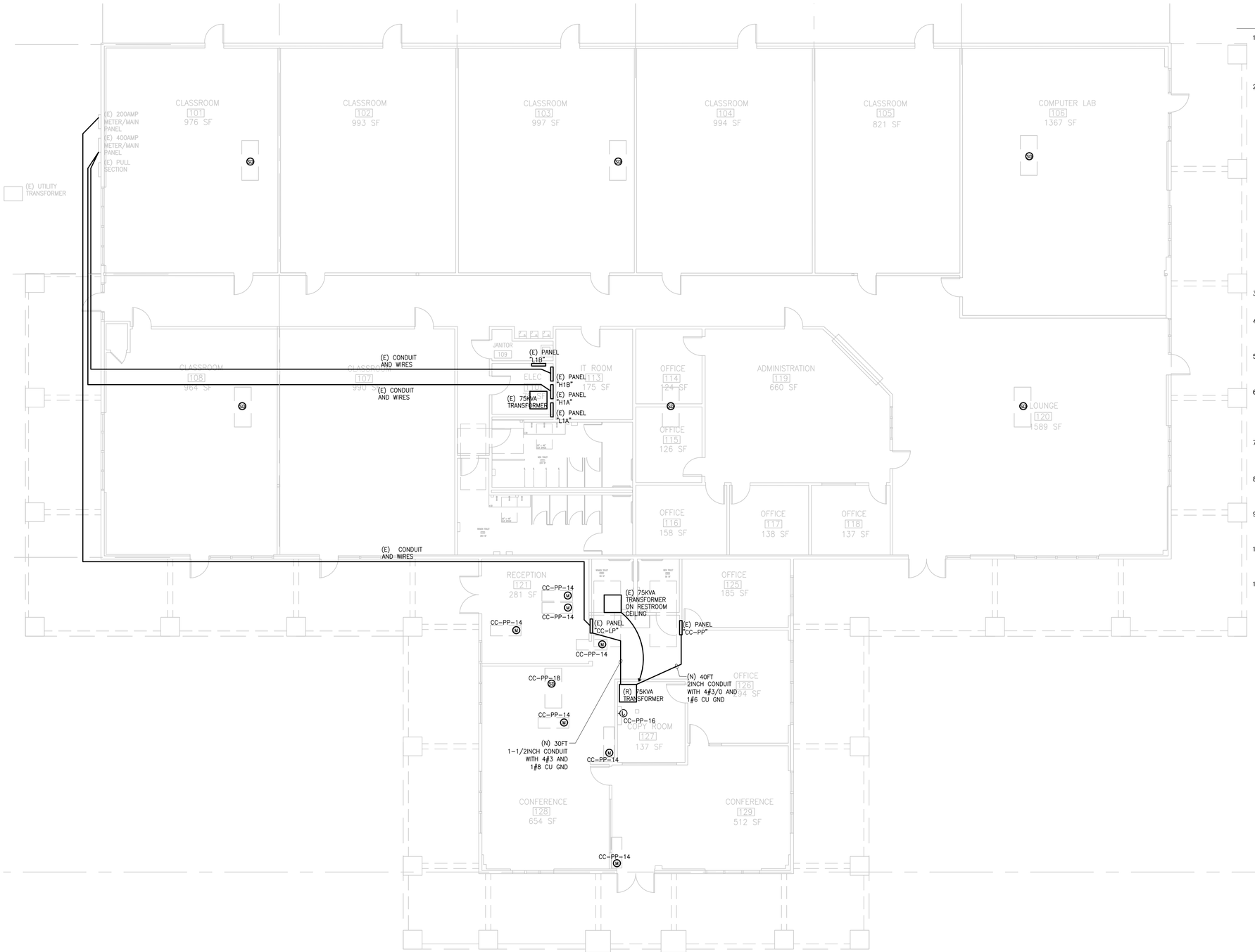

1 POWER PLAN

SCALE: 1/8" = 1' - 0"

SHEET NOTES

1. CIRCUIT NUMBERS ARE SCHEMATIC AND SHOW THE DESIGN INTENTION AND LOAD BALANCE REQUIREMENTS. CONTRACTOR SHALL INCLUDE IN HIS BID THE TIME REQUIRED TO FIELD VERIFY AND TRACE ALL EXISTING AVAILABLE CIRCUITS AND THOSE, WHICH BECOME AVAILABLE AS A RESULT OF DEMOLITION. CONTRACTOR SHALL INDICATE ACTUAL CIRCUITS USED ON AS-BUILD DRAWINGS AND PANEL DIRECTORY.

2. CONTRACTOR REPAIR ALL POWER PANEL DEFICIENCY PER AS FOLLOW. REPLACE PANEL IN PLACE WITH NEW IF THE FOLLOWING IS UN-REPAIRABLE.
   - 2.1. PANEL "L1B"
     - 2.1.1. PROVIDE KNOCK OUT SEAL FOR ANY KNOCK OUTS NOT CONNECTED TO ANY CONDUIT. BID TO INCLUDE 5 KNOCK OUTS.
     - 2.1.2. PROVIDE GROUNDING BUSHING ON ALL CONDUIT ENTRY. BID TO INCLUDE 10 CONDUIT ENTRIES.
     - 2.1.3. TRACE CIRCUITS AND PROVIDE ACCURATE TYPEWRITTEN PANEL SCHEDULE. BID TO INCLUDE 42 CIRCUITS PER PANEL.
     - 2.1.4. PROVIDE ALL ELECTRICAL WARNING SIGN ON PANEL AS REQUIRED BY CODE.
   - 2.2. PANEL "L1A", "H1A" AND "H1B"
     - 2.2.1. PROVIDE GROUNDING BUSHING ON ALL CONDUIT ENTRY. BID TO INCLUDE 10 CONDUIT ENTRIES PER PANEL PER PANEL.
     - 2.2.2. TRACE CIRCUITS AND PROVIDE ACCURATE TYPEWRITTEN PANEL SCHEDULE. BID TO INCLUDE 42 CIRCUITS PER PANEL.
     - 2.2.3. RESURFACE ANY OXIDATION/WATER DAMAGE AREA OF PANEL. REPLACE IN-PLACE WITH NEW PANEL IF DAMAGE IS BEYOND REPAIR.
     - 2.2.4. PROVIDE ALL ELECTRICAL WARNING SIGN ON PANEL AS REQUIRED BY CODE.
   - 2.3. PANEL "CC-LP"
     - 2.3.1. PROVIDE GROUNDING BUSHING ON ALL CONDUIT ENTRY. BID TO INCLUDE 10 CONDUIT ENTRIES.
     - 2.3.2. TRACE CIRCUITS AND PROVIDE ACCURATE TYPEWRITTEN PANEL SCHEDULE. BID TO INCLUDE 42 CIRCUITS PER PANEL.
     - 2.3.3. PROVIDE FEEDER PHASE IDENTIFIER TAGS/LABELS

3. CONTRACTOR TO TRACE ANY OPEN J-BOX; TERMINATE WIRES FOR FUTURE USE AND PROVIDE COVER, OR COORDINATE WITH GC TO REMOVE ANY NOT USED J-BOXES AND PATCH WALL. BID TO INCLUDE 10 J-BOXES

4. CONTRACTOR TO VERIFY UTILITY AIC WITH UTILITY COMPANY, AND PROVIDE AIC CALCULATION TO DOWNSTREAM COMPONENTS. REPLACE IN PLACE ANY COMPONENTS NOT MEETING MINIMAL AIC RATING WITH COMPONENTS THAT EXCEEDS CALCULATED AIC.

5. CONTRACTORS TO PROVIDE 30DAY ENERGY MONITORING ON BOTH 200AMP AND 400AMP EXISTING UTILITY SERVICE, TO ENSURE THESE ARE SUFFICIENT FOR THE FACILITY. MONITORING REPORT TO BE PROVIDE FOR OWNER/ENGINEER REVIEW.

6. CONTRACTOR TO PROVIDE HIPOT TESTING ON EXISTING FEEDERS FROM UTILITY SERVICE TO PANEL "H1A", "H1B" AND "CC-LP", AND PROVIDE TEST RESULT/REPORT FOR OWNER/ENGINEER REVIEW. REPLACE ANY FEEDER THAT DOES NOT MEETING MANUFACTURE STANDARD. LENGTH AND SIZE TO MATCH EXISTING WITH FIELD VERIFICATION. SEE SINGLE-LINE DIAGRAM FOR REFERENCE

7. CONTRACTOR TO VERIFY FEEDER LENGTH AND VOLTAGE DROP INDICATED ON SINGLE-LINE DIAGRAM. PROVIDE VERIFICATION REPORT/CALCULATION AND NOTIFY OWNER/ENGINEER WHEN VOLTAGE DROP EXCEED 2% AND/OR THAT AS INDICATED ON SINGLE-LINE.

8. CONTRACTOR TO COORDINATE WITH MECHANICAL SUB TO ENSURE ALL MECHANICAL SYSTEM ARE SUFFICIENTLY POWERED. REPAIR OR PROVIDE NEW POWER CONNECTION TO ANY EQUIPMENT TO ENSURE PROPER OPERATION.

9. CONTRACTOR TO PROVIDE LABELS ON ALL RECEPTACLES, LIGHT SWITCHES, DISCONNECT SWITCHES WITH LABEL WITH PANEL NAME AND CIRCUIT NUMBER. LABELS SHALL BE WHITE BACKGROUND LABEL WITH BLACK LETTERING.

10. PROVIDE POWER CONNECTION TO SMOKE DETECTOR AND MOTORIZED DAMPER AS INDICATED ON MECHANICAL PLAN. COORDINATE WITH MECHANICAL CONTRACTOR AND MECHANICAL PLAN FOR EXACT LOCATION AND QUANTITY.

11. RELOCATED EXISTING 75 KVA TRANSFORM FORM RESTROOM CEILING TO COPY ROOM-127

OWNER:

Solano Community College District
2000 North Village Parkway
Vacaville, CA 95688

ARCHITECT:

CA ARCHITECTS
475 Gate Five Road, Suite 107
Sausalito, CA 94965
T 415.331.7655
F 415.331.7656

PROJECT:

Vacaville Classroom Building (Annex) Renovation Project

CONSULTANT TEAM:

STAMP

REGISTERED PROFESSIONAL ENGINEER
DONALD P.S. CHEUNG
No.9279
EXP. 09/30/17
ELECTRICAL
STATE OF CALIFORNIA

SHEET LEGEND:

ISSUE/REVISION:

NO:	DATE:	DESCRIPTION:
	04/25/2017	ISSUE FOR DD 100%
	06/06/2017	ISSUE FOR CD 50%
	06/30/2017	ISSUE FOR CD 60%
	07/20/2017	ISSUE FOR CD 100%
	10/18/2017	DSA RESUBMIT

KEY PLAN:

FILE: 48-C1

IDENTIFICATION STAMP
DIVISION OF THE STATE ARCHITECT
02-116082
AC JCC FLS GBC SS PVL
DATE: 10/31/2017

SCALE:
DATE:
PROJECT NO:
PERMIT APPLICATION NO.:

POWER PLAN

E1.00

DSA RESUB. SET

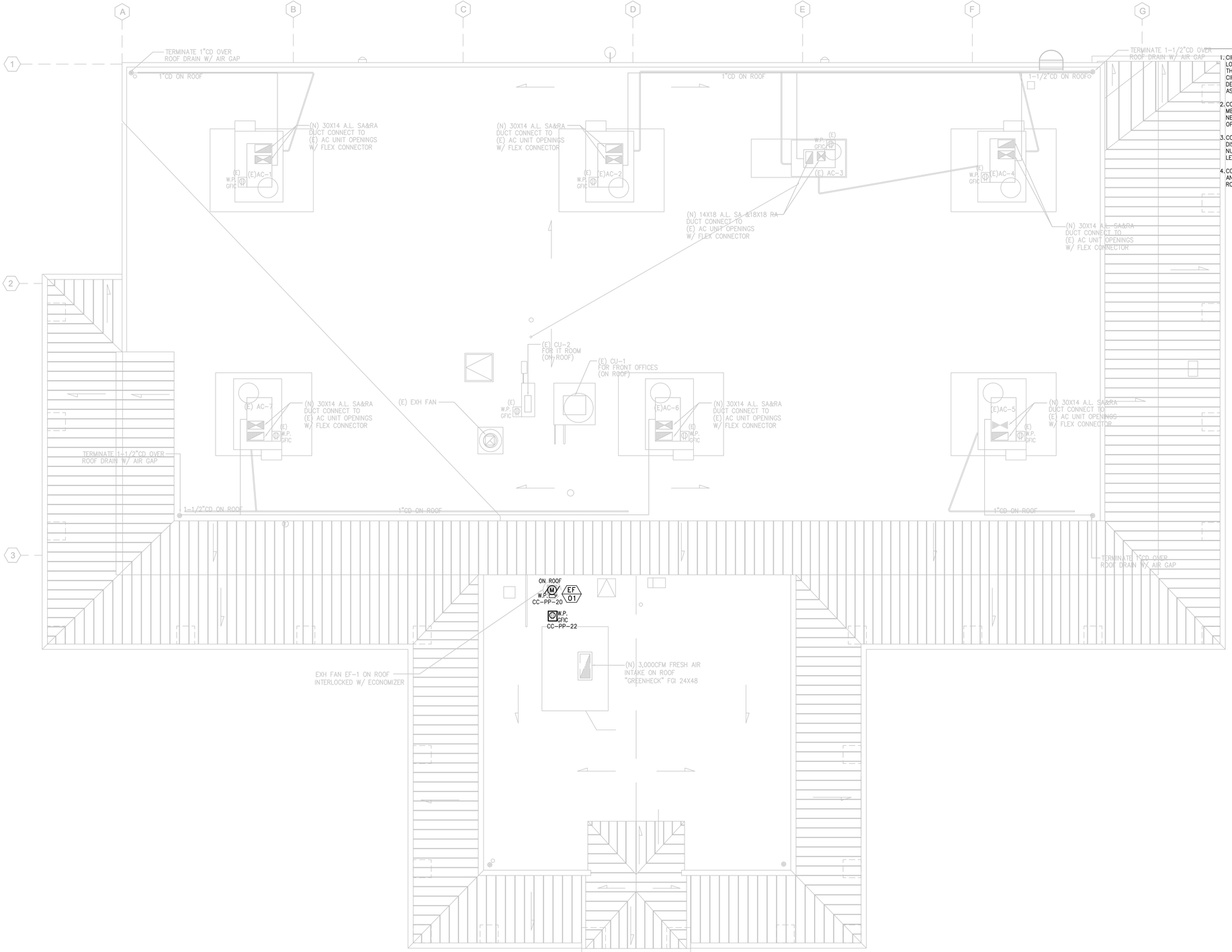

SHEET NOTES

1. CIRCUIT NUMBERS ARE SCHEMATIC AND SHOW THE DESIGN INTENTION AND LOAD BALANCE REQUIREMENTS. CONTRACTOR SHALL INCLUDE IN HIS BID THE TIME REQUIRED TO FIELD VERIFY AND TRACE ALL EXISTING AVAILABLE CIRCUITS AND THOSE, WHICH BECOME AVAILABLE AS A RESULT OF DEMOLITION. CONTRACTOR SHALL INDICATE ACTUAL CIRCUITS USED ON AS-BUILD DRAWINGS AND PANEL DIRECTORY.
2. CONTRACTOR TO COORDINATE WITH MECHANICAL SUB TO ENSURE ALL MECHANICAL SYSTEM ARE SUFFICIENTLY POWERED. REPAIR OR PROVIDE NEW POWER CONNECTION TO ANY EQUIPMENT TO ENSURE PROPER OPERATION.
3. CONTRACTOR TO PROVIDE LABELS ON ALL RECEPTACLES, LIGHT SWITCHES, DISCONNECT SWITCHES WITH LABEL WITH PANEL NAME AND CIRCUIT NUMBER. LABELS SHALL BE WHITE BACKGROUND LABEL WITH BLACK LETTERING.
4. CONTRACTOR TO COORDINATE WITH GC ON ROOF WORK, TO DISCONNECT AND SAFE OFF ANY ELECTRICAL CONNECTION TO ROOF EQUIPMENT DURING ROOF WORK, AND RECONNECTION OF ROOF EQUIPMENT AFTER ROOF WORK.

1 POWER PLAN - ROOF

SCALE: 1/8" = 1' - 0"

OWNER:

Solano Community College District
2000 North Village Parkway
Vacaville, CA 95688

ARCHITECT:

CA ARCHITECTS
475 Gate Five Road, Suite 107
Sausalito, CA 94965
T 415.331.7655
F 415.331.7656

PROJECT:

Vacaville Classroom Building (Annex) Renovation Project

CONSULTANT TEAM:

STAMP

REGISTERED PROFESSIONAL ENGINEER
DONALD P.S. CHEUNG
No.9279
EXP. 09/30/17
ELECTRICAL
STATE OF CALIFORNIA

SHEET LEGEND:

ISSUE/REVISION:

NO:	DATE:	DESCRIPTION:
	04/25/2017	ISSUE FOR DD 100%
	06/06/2017	ISSUE FOR CD 50%
	06/30/2017	ISSUE FOR CD 60%
	07/20/2017	ISSUE FOR CD 100%
	10/18/2017	DSA RESUBMIT

KEY PLAN:

FILE: 48-C1
IDENTIFICATION STAMP
DIVISION OF THE STATE ARCHITECT
02-116082
AC ICC FLS GBC SS PVL
DATE: 10/31/2017

SCALE:
DATE:
PROJECT NO:
PERMIT APPLICATION NO.:

POWER PLAN
ROOF

E1.01

DSA RESUB. SET

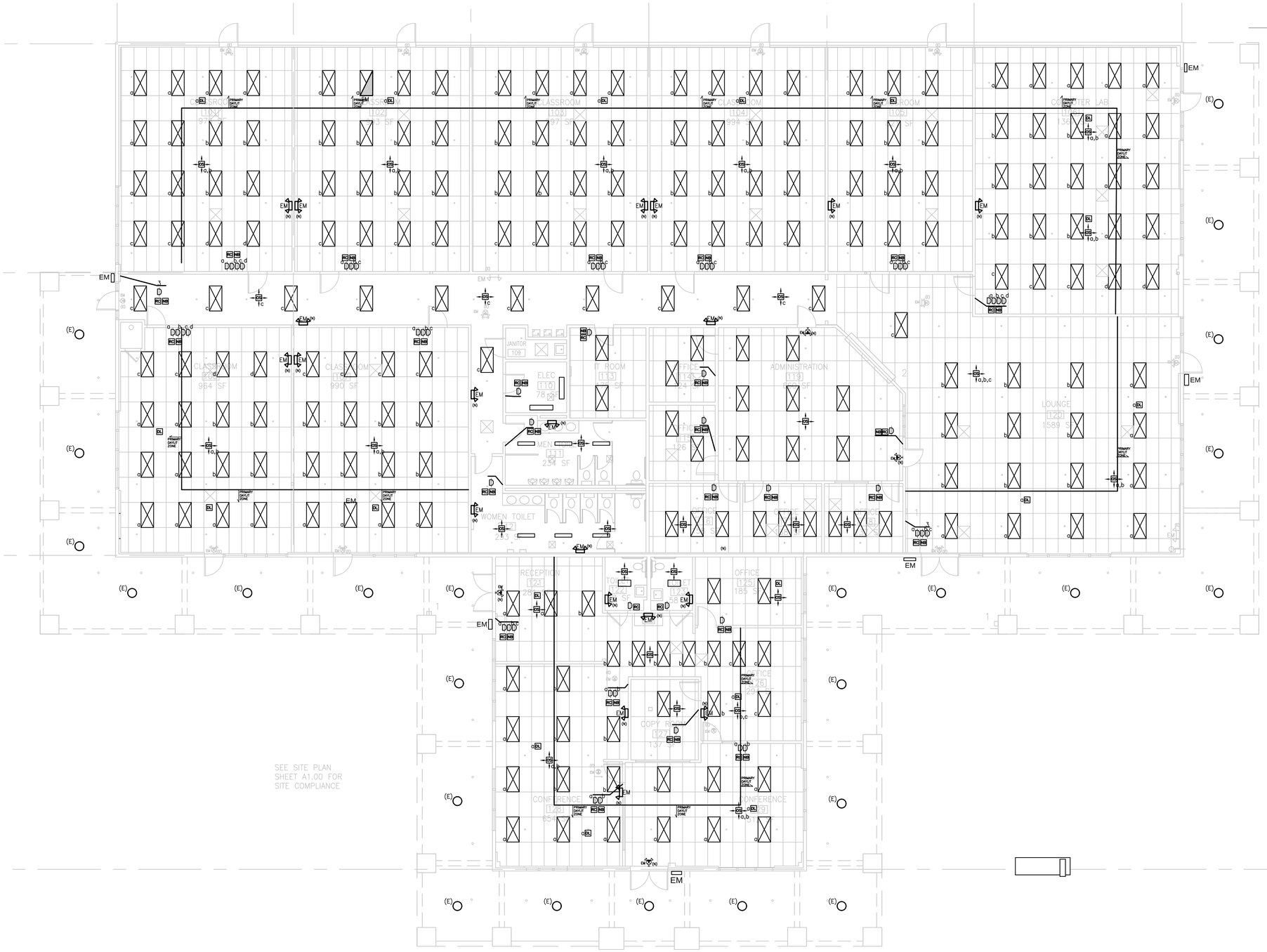

1 LIGHTING PLAN

SCALE: 1/8" = 1' - 0"

SHEET NOTES

1. CIRCUIT NUMBERS ARE SCHEMATIC AND SHOW THE DESIGN INTENTION AND LOAD BALANCE REQUIREMENTS. CONTRACTOR SHALL VERIFY ALL EXISTING AVAILABLE CIRCUITS AND THOSE, WHICH BECOME AVAILABLE AS A RESULT OF DEMOLITION. CONTRACTOR SHALL INDICATE ACTUAL CIRCUITS USED ON AS-BUILD DRAWINGS.
2. FURNISH AND INSTALL NEW BUILDING STANDARD LED FIXTURE WITH DIMMING CAPABILITY IN PLACE OF EXISTING FIXTURE AND CONNECT TO EXISTING CIRCUIT IN THE AREA.
3. REPLACE EXISTING SWITCH WITH BUILDING STANDARD DIMMER SWITCH AND CONNECT TO LIGHT FIXTURES IN THE AREA. PROVIDE WALL COLOR MATCHING BLANK COVER FOR ANY UNUSED GANG.
4. FURNISH AND INSTALL NEW BUILDING STANDARD CEILING MOUNTED OCCUPANCY SENSOR FOR LIGHTS IN THE AREA. SEE WIRING DIAGRAM FOR CONNECTION.
5. FURNISH AND INSTALL NEW BUILDING STANDARD CEILING MOUNTED DAY LIGHT SENSOR FOR LIGHTS IN THE AREA.
6. ALL LIGHT SWITCHES SHALL BE LABEL WITH PANEL NAME AND CIRCUIT NUMBER ON WHITE BACKGROUND LABEL WITH BLACK LETTERING
7. ALL CORE AREAS (HALLWAY AND LOUNGE) LIGHTS SHALL DIM TO 50% WHEN AREA IS NOT OCCUPIED.
8. DURING CEILING GRID SYSTEM, CONTRACTOR SHALL REMOVE ALL LIGHT FIXTURES, AND DEMO WIRES TO CLOSEST CEILING J-BOX TO SAFE OFF ALL LIGHTING CIRCUITS FOR NEW FIXTURE.
9. Provide CBC compliant EM Lighting (Battery Pack type OK) at each of the exterior landings at egress doors as shown (typ).

OWNER:

Solano Community College District
2000 North Village Parkway
Vacaville, CA 95688

ARCHITECT:

CA ARCHITECTS
475 Gate Five Road, Suite 107
Sausalito, CA 94965
T 415.331.7655
F 415.331.7656

PROJECT:

Vacaville Classroom Building (Annex) Renovation Project

CONSULTANT TEAM:

STAMP

REGISTERED PROFESSIONAL ENGINEER
DONALD P.S. CHEUNG
No.9279
EXP. 09/30/17
ELECTRICAL
STATE OF CALIFORNIA

SHEET LEGEND:

ISSUE/REVISION:

NO:	DATE:	DESCRIPTION:
	04/25/2017	ISSUE FOR DD 100%
	06/06/2017	ISSUE FOR CD 50%
	06/30/2017	ISSUE FOR CD 60%
	07/20/2017	ISSUE FOR CD 100%
	10/18/2017	DSA RESUBMIT

KEY PLAN:

FILE: 48-C1

IDENTIFICATION STAMP
DIVISION OF THE STATE ARCHITECT
02-116082
AC TCC FLS GBC SS PVL
DATE: 10/31/2017

SCALE:
DATE:
PROJECT NO:
PERMIT APPLICATION NO.:

LIGHTING PLAN

E2.00

DSA RESUB. SET

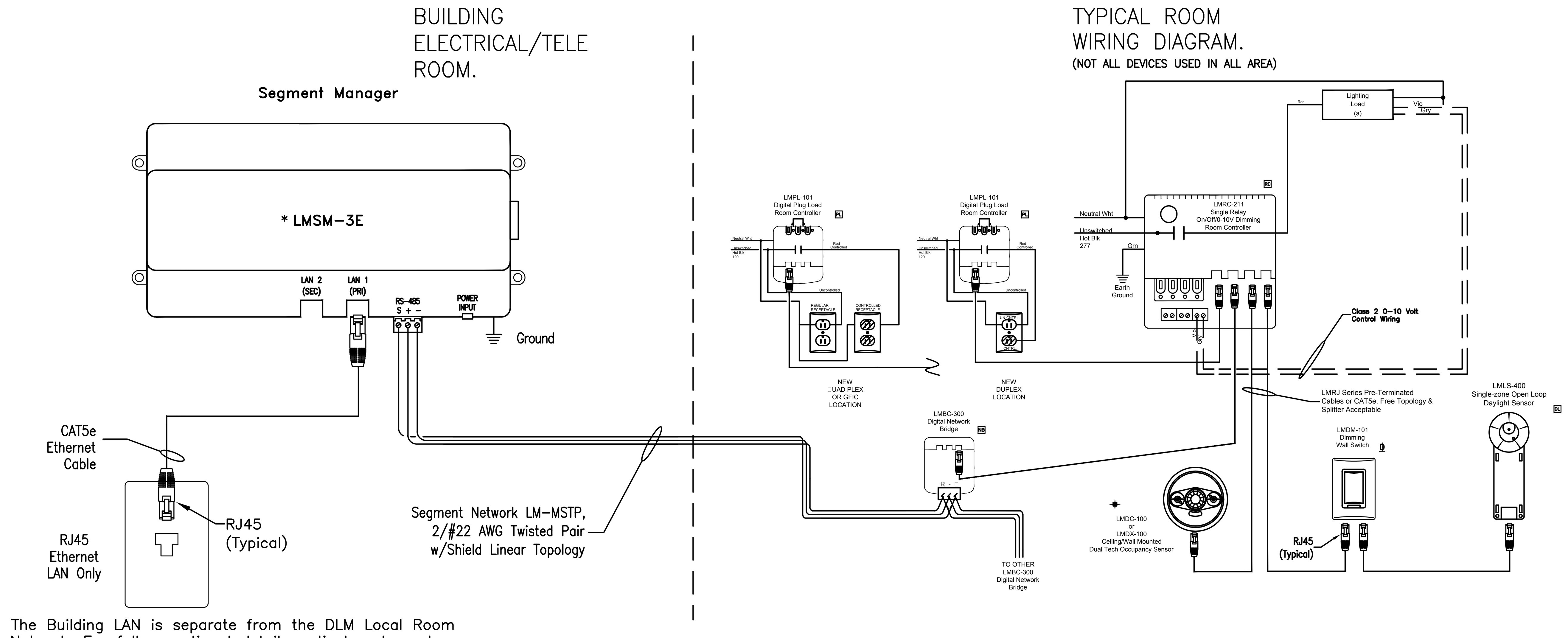

The Building LAN is separate from the DLM Local Room Network. For full operational details, adjustments and more features of the product, see the DLM System Installation Guide at www.wattstopper.com

2 PARTIAL LIGHTING SYSTEM WIRE CONNECTION DIAGRAM

SCALE: NONE

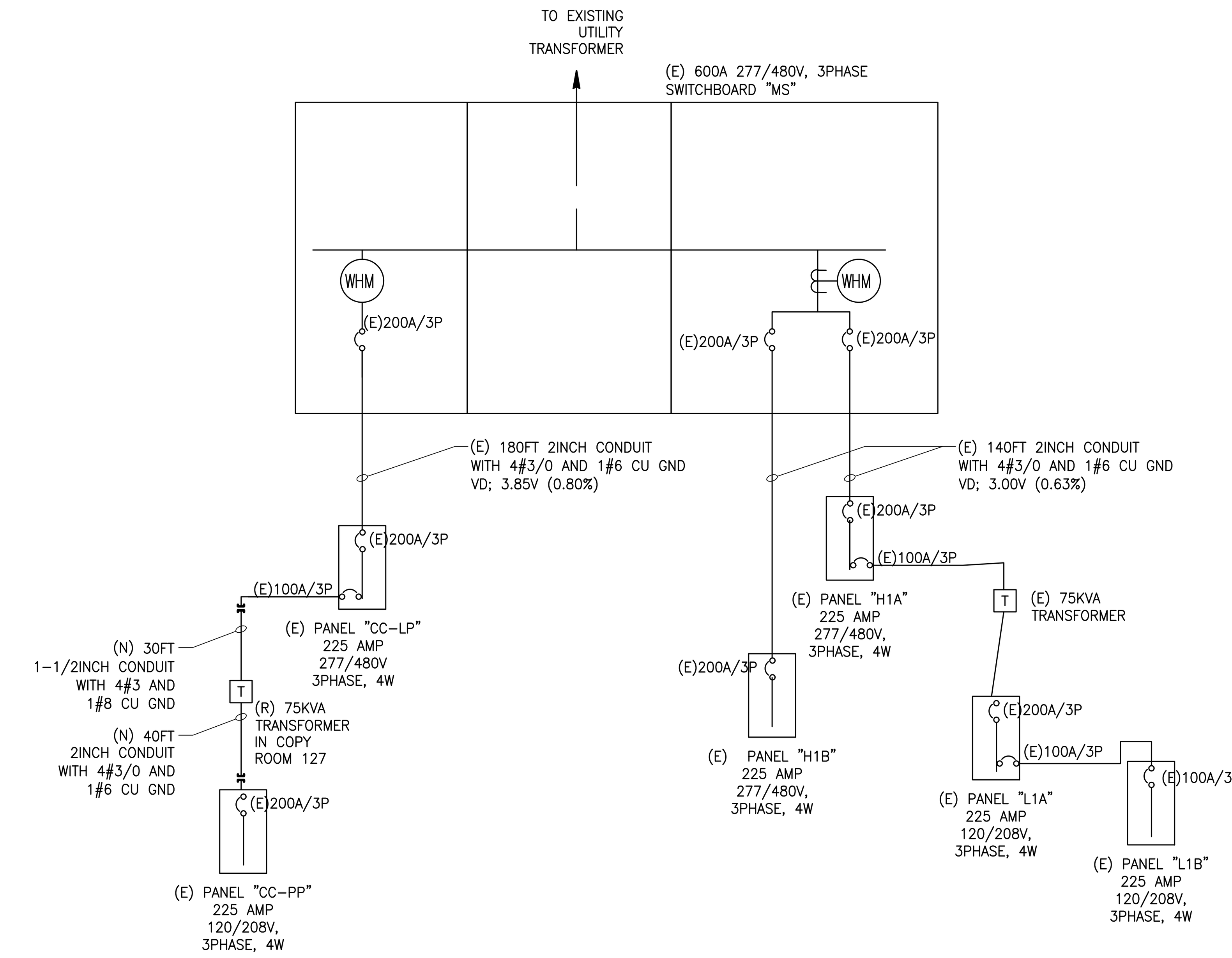

1 SINGLE-LINE DIAGRAM

SCALE: NONE

LIGHTING FIXTURE SCHEDULE

SYMBOL	DESCRIPTION	MANUFACTURER	MODEL NUMBER	LAMPS	MOUNTING	COMMENTS
	RECESSED 2X4 LED LIGHT FIXTURE	LITHONIA LIGHTING	2AVL4-50L-MVOLT -EZ1-LP840-N100	LED	IN GRID	PROVIDE DIMMING. S.A.D. FOR MOUNTING DETAIL
	SURFACE MNT. LINEAR LED LIGHT FIXTURE	LITHONIA LIGHTING	ZL1N-L24(48)-####LM-FST-MVOLT-30K-80CRI-XX-XX	LED	SURFACE	PROVIDE DIMMING. S.A.D. FOR MOUNTING DETAIL

SHEET NOTES

1. ANY CIRCUIT FEEDING FIRE ALARM COMPONENT SHALL BE MARKED WITH RED MARKING AND MECHANICALLY PROTECTED (LOCKOUT TYPE BREAKER), PER NFPA 72;10.6.5.2

PANEL :CC-LP (existing) — 277/480V, 3PHASE-4 WIRE — RECESS MOUNTED
LOCATION: — BUS AMPACITY: 225A — TOP FED
MAIN: 200A/3P — 100% Copper Ground Bus — 22KA MIN. AIC SYMMETRICAL

DESCRIPTION	DEVICE	Ckt. No.	LOAD/PHASE (VA) A	B	C	A	B	C	Ckt. No.	DEVICE	DESCRIPTION
(E) 75KVA Transformer	100/3	1	25000			13833			2	60/3	(E) AC
(E) 75KVA Transformer	-	3		25000			13833		4	-	(E) AC
(E) 75KVA Transformer	-	5			25000			13833	6	-	(E) AC
Spare	20/1	7							8	B	Blank
(E) Exit lights	20/1	9		200					10	B	Blank
(E) Lights	20/1	11			1500				12	B	Blank
(E) Lights	20/1	13	1500						14	B	Blank
Blank	B	15							16	B	Blank
Blank	B	17							18	B	Blank
Blank	B	19							20	B	Blank
Blank	B	21							22	B	Blank
Blank	B	23							24	B	Blank
Blank	B	25							26	B	Blank
Blank	B	27							28	B	Blank
Blank	B	29							30	B	Blank
SUBTOTAL (VA)			26500	25200	26500	13833	13833	13833	SUBTOTAL (VA)		
TOTAL ALL PHASES (KVA)			PHASE A		PHASE B		PHASE C		TOTAL ALL PHASES (AMPS)		
119699			40333		39033		40333		144		

PANEL : CC-PP (existing) — 120/208V, 3PHASE-4 WIRE — RECESS MOUNTED
LOCATION: — BUS AMPACITY: 225A — TOP FED
MAIN: 200A/3P — 100% Copper Ground Bus — 22KA MIN. AIC SYMMETRICAL

DESCRIPTION	DEVICE	Ckt. No.	LOAD/PHASE (VA) A	B	C	A	B	C	Ckt. No.	DEVICE	DESCRIPTION
(E) Rec.	20/1	1	1080			1500			2	20/1	(E) Power pole
(E) Rec.	20/1	3		1080			1500		4	20/1	(E) Power pole
(E) Rec.	20/1	5			1080			1080	6	20/1	(E) Rec.
(E) Rec.	20/1	7	1080			1080			8	20/1	(E) Rec.
(E) Rec.	20/1	9		1080			1080		10	20/1	(E) Rec.
Spare	20/1	11						1080	12	20/1	Condensate Pump
(E) 208V Printer	30/2	13	1500			700			14	20/1	Motorized dampers
(E) 208V Printer	-	15		1500			100		16	20/1	Smoke detector
Spare	20/1	17						100	18	20/1	Smoke detector
Spare	20/1	19				200			20	20/1	Exhaust Fan
Spare	20/1	21					180		22	20/1	Roof GFIC receptacle
Spare	20/1	23							24	20/1	Spare
Spare	20/1	25							26	30/1	Spare
Spare	20/1	27					500		28	20/1	(E) Attic lights
Spare	30/1	29							30	20/1	Spare
Spare	20/1	31				1500			32	30/2	(E) 208V Printer
Spare	20/1	33					1500		34	-	(E) 208V Printer
(E) Water Heater	20/1	35			1500				36	20/1	Spare
(E) Rec.	20/1	37	1080			500			38	20/1	(E) Projector
(E) Rec.	20/1	39		1080			1000		40	20/2	(E) 208V Printer
(E) Rec.	20/1	41			1080			1000	42	-	(E) 208V Printer
SUBTOTAL (VA)			4740	4740	3660	5480	5860	3260	SUBTOTAL (VA)		
TOTAL ALL PHASES (KVA)			PHASE A		PHASE B		PHASE C		TOTAL ALL PHASES (AMPS)		
27740			10220		10600		6920		77		

PANEL :H1A (existing) — 277/480V, 3PHASE-4 WIRE — SURFACE MOUNTED
LOCATION: — BUS AMPACITY: 225A — TOP FED
MAIN: 200A/3P — 100% Copper Ground Bus — 22KA MIN. AIC SYMMETRICAL

DESCRIPTION	DEVICE	Ckt. No.	LOAD/PHASE (VA) A	B	C	A	B	C	Ckt. No.	DEVICE	DESCRIPTION
Lighting - Classroom; 101/102	20/1	1	1500			2500			2	20/2	(E) Site Lighting
Lighting - Classroom; 103/104	20/1	3		1500			2500		4	-	(E) Site Lighting
Lighting - Classroom; 105/106	20/1	5			1500			2500	6	20/2	(E) Site Lighting
Lighting - Night Light	20/1	7	500			2500			8	-	(E) Site Lighting
Lighting - Corridor/Lobby	20/1	9		1000					10	20/1	Spare
Lighting - Office	20/1	11			1000			400	12	20/1	(E) Bollard Lights
Lighting - Office	20/1	13	1000						14	20/1	Spare
Lighting - Lounge	20/1	15		1000					16	B	Blank
Lighting - Classroom; 107/108	20/1	17			1500				18	B	Blank
Spare	20/1	19							20	B	Blank
Spare	20/1	21							22	B	Blank
Spare	20/1	23							24	B	Blank
Spare	20/1	25							26	B	Blank
Spare	20/1	27							28	B	Blank
Blank	B	29							30	B	Blank
Blank	B	31							32	B	Blank
Blank	B	33							34	B	Blank
Blank	B	35							36	B	Blank
Blank	B	37				25000			38	100/3	(E) 75KVA Transformer to Panel "L1A"
Blank	B	39					25000		40	-	(E) 75KVA Transformer to Panel "L1A"
	20/1	41						25000	42	-	(E) 75KVA Transformer to Panel "L1A"
SUBTOTAL (VA)			3000	3500	4000	30000	27500	27900	SUBTOTAL (VA)		
TOTAL ALL PHASES (KVA)			PHASE A		PHASE B		PHASE C		TOTAL ALL PHASES (AMPS)		
95900			33000		31000		31900		115		

PANEL :L1A (existing) — 120/208V, 3PHASE-4 WIRE — SURFACE MOUNTED
LOCATION: — BUS AMPACITY: 225A — TOP FED
MAIN: 200A/3P — 100% Copper Ground Bus — 22KA MIN. AIC SYMMETRICAL

DESCRIPTION	DEVICE	Ckt. No.	LOAD/PHASE (VA) A	B	C	A	B	C	Ckt. No.	DEVICE	DESCRIPTION
(E) Rec. - Classroom	20/1	1	1080			1500			2	30/1	(E) Water Heater
(E) Rec. - Classroom	20/1	3		1080			1500		4	30/1	(E) Water Heater
(E) Rec. - Classroom	20/1	5			1080			500	6	20/1	(E) Security Light
(E) Rec. - Classroom	20/1	7	1080			180			8	20/1	(E) Rec. - TTB
(E) Rec. - Classroom	20/1	9		1080			100		10	20/1	(E) FA Bell
(E) Rec. - Classroom	20/1	11			1080			100	12	20/1	(E) Plaza Directory
(E) Rec. - Classroom	20/1	13	1080			150			14	20/1	(E) Soffit Lights
(E) Rec. - Classroom	20/1	15		1080			1000		16	15/2	(E) Fountain Pump
(E) Rec. - Classroom	20/1	17			1080			1000	18	-	(E) Fountain Pump
(E) Rec. - Classroom	20/1	19	1080			100			20	15/1	(E) Fountain Lights
(E) Rec. - Classroom	20/1	21		1080			500		22	20/1	(E) Irrigation Controller
(E) Rec. - Classroom	20/1	23			1080			200	24	20/1	(E) Exhaust Fan
(E) Rec. - Office	20/1	25	1080			500			26	30/1	(E) Drinking Fountain
(E) Rec. - Office	20/1	27		1080			500		28	20/1	(E) Drinking Fountain
(E) Rec. - Office	30/1	29			1080			500	30	20/1	(E) Drinking Fountain
(E) Rec. - Office	20/1	31	1080			500			32	20/1	(E) LCC Control
(E) Rec. - Office	20/1	33		1080			100		34	20/1	(E) FA Communicator
(E) Rec. - Office	20/1	35			1080			100	36	20/1	(E) Wall Sconce
Spare	30/1	37							38	100/3	(E) Panel L1B
Spare	30/1	39							40	-	(E) Panel L1B
Blank	B	41							42	-	(E) Panel L1B
SUBTOTAL (VA)			6480	6480	6480	2930	3700	2400	SUBTOTAL (VA)		
TOTAL ALL PHASES (KVA)			PHASE A		PHASE B		PHASE C		TOTAL ALL PHASES (AMPS)		
28470			9410		10180		8880		79		

PANEL :H1B (existing) — 277/480V, 3PHASE-4 WIRE — SURFACE MOUNTED
LOCATION: — BUS AMPACITY: 225A — TOP FED
MAIN: 200A/3P — 100% Copper Ground Bus — 22KA MIN. AIC SYMMETRICAL

DESCRIPTION	DEVICE	Ckt. No.	LOAD/PHASE (VA) A	B	C	A	B	C	Ckt. No.	DEVICE	DESCRIPTION
Blank	20/1	1							2	B	Blank
Blank	20/1	3							4	B	Blank
Blank	20/1	5							6	B	Blank
Blank	20/1	7							8	B	Blank
Blank	20/1	9							10	B	Blank
Blank	20/1	11							12	B	Blank
Blank	20/1	13							14	B	Blank
Blank	20/1	15							16	B	Blank
Blank	20/1	17							18	B	Blank
(E) AC-1	30/3	19	2880						20	20/3	Spare
(E) AC-1	-	21		2880					22	-	Spare
(E) AC-1	-	23			2880				24	-	Spare
(E) AC-2	30/3	25	2880			2880			26	30/3	(E) AC-3
(E) AC-2	-	27		2880			2880		28	-	(E) AC-3
(E) AC-2	-	29			2880			2880	30	-	(E) AC-3
(E) AC-4	30/3	31	2880			2880			32	30/3	(E) AC-5
(E) AC-4	-	33		2880			2880		34	-	(E) AC-5
(E) AC-4	-	35			2880			2880	36	-	(E) AC-5
(E) AC-6	30/3	37	2880						38	30/3	Spare
(E) AC-6	-	39		2880					40	-	Spare
(E) AC-6	-	41			2880				42	-	Spare
SUBTOTAL (VA)			11520	11520	11520	5760	5760	5760	SUBTOTAL (VA)		
TOTAL ALL PHASES (KVA)			PHASE A		PHASE B		PHASE C		TOTAL ALL PHASES (AMPS)		
51840			17280		17280		17280		62		

PANEL :L1B (existing) — 120/208V, 3PHASE-4 WIRE — SURFACE MOUNTED
LOCATION: — BUS AMPACITY: 225A — TOP FED
MAIN: 100A/3P — 100% Copper Ground Bus — 22KA MIN. AIC SYMMETRICAL

DESCRIPTION	DEVICE	Ckt. No.	LOAD/PHASE (VA) A	B	C	A	B	C	Ckt. No.	DEVICE	DESCRIPTION
(E) Vending machine	30/1	1	1000			1080			2	20/1	(E) Rec. PC LAB
(E) Vending machine	30/1	3		1000			1080		4	20/1	(E) Rec. PC LAB
(E) Vending machine	30/1	5			1000			1080	6	20/1	(E) Rec. PC LAB
(E) Television	20/1	7	500			1080			8	20/1	(E) Rec. PC LAB
(E) Television	20/1	9		500			1080		10	20/1	(E) Rec. PC LAB
(E) Rec. - Telephone room	20/1	11			180			1080	12	20/1	(E) Rec. PC LAB
(E) Floor Rec.	20/1	13	1080			1080			14	20/1	(E) Rec. PC LAB
(E) Floor Rec.	20/1	15		1080			1080		16	20/1	(E) Rec. PC LAB
(E) Floor Rec.	20/1	17			1080			1080	18	20/1	(E) Rec. PC LAB
(E) Floor Rec.	20/1	19	1080			1000			20	20/1	(E) Printer
(E) Floor Rec.	20/1	21		1080			1000		22	20/1	(E) Printer
Spare	20/1	23						1000	24	20/1	(E) Printer
(E) Fire Alarm Panel	20/1	25	500			500			26	30/1	(E) Rec. - Rm 105 West
(E) Fire Smoke dampers	20/1	27		500			500		28	20/1	(E) Rec. Server/Data Room
Spare	20/1	29							30	20/1	Spare
Spare	20/1	31							32	20/1	Spare
Spare	20/1	33							34	20/1	Spare
(E) Air Handler	15/2	35			500				36	20/1	Spare
(E) Air Handler	-	37	500						38	20/1	Spare
(E) A/C Unit	30/2	39		1500					40	20/1	Spare
(E) A/C Unit	-	41			1500				42	B	Blank
SUBTOTAL (VA)			4660	5660	4260	4740	4740	4240	SUBTOTAL (VA)		
TOTAL ALL PHASES (KVA)			PHASE A		PHASE B		PHASE C		TOTAL ALL PHASES (AMPS)		
28300			9400		10400		8500		79		

OWNER:

Solano Community College District
2000 North Village Parkway
Vacaville, CA 95688

ARCHITECT:

CA ARCHITECTS
475 Gate Five Road, Suite 107
Sausalito, CA 94965
T 415.331.7655
F 415.331.7656

PROJECT:

Vacaville Classroom Building (Annex) Renovation Project

CONSULTANT TEAM:

STAMP

REGISTERED PROFESSIONAL ENGINEER
DENNIS P.S. CHEUNG
No.9279
EXP.09/30/17
ELECTRICAL
STATE OF CALIFORNIA

SHEET LEGEND:

ISSUE/REVISION:

NO:	DATE:	DESCRIPTION:
	04/25/2017	ISSUE FOR DD 100%
	06/06/2017	ISSUE FOR CD 50%
	06/30/2017	ISSUE FOR CD 60%
	07/20/2017	ISSUE FOR CD 100%
	10/18/2017	DSA RESUBMIT

KEY PLAN:

FILE: 48-C1
IDENTIFICATION STAMP
DIVISION OF THE STATE ARCHITECT
02-116082
AC JCC FLS GBC SS PVL
DATE: 10/31/2017

SCALE:
DATE:
PROJECT NO:
PERMIT APPLICATION NO.:

ELECTRICAL WIRING DIAGRAMS

E3.00

DSA RESUB. SET

SCOPE OF WORK

PROVIDE A MANUAL FIRE ALARM SYSTEM WITH FULL OCCUPANT NOTIFICATION. REPLACE ALL EXISTING CABLE WITH NEW CABLE. ALL CABLE SHALL BE IN CONDUIT. SYSTEM SHALL MONITOR WATERFLOW AND VALVE POSITION. SYSTEM SHALL SHUT DOWN RE□UIRED HVAC SYSTEMS. SYSTEM SHALL HAVE THE ABILITY TO BE MONITORED REMOTELY WITH FULL POINT ID. SYSTEM SHALL HAVE ONE REMOTE SYSTEM ANNUNCIATOR AND MANUAL PULL STATIONS AT ALL SPECIFIED EXITS.
THE FIRE ALARM CONTRACTOR SHALL, AT THEIR DISCRETION, HAVE THE OPTION TO RE-USE EXISTING CABLE PROVIDED THAT IT MEETS ALL APPLICABLE NFPA WIRING STANDARDS, 2013 CALIFORNIA ELECTRICAL CODE AND IS APPROVED BY THE OWNER AND LOCAL AHJ. REUSE OF EXISTING CIRCUITS SHALL BE ROUTED, MANAGED AND FIRESTOP RATINGS SHALL BE IMPLEMENTED/MAINTAINED AS RE□UIRED BY CODE AND THE AHJ. THE FIRE ALARM CONTRACTOR SHALL PROVIDE FULL INSTALLATION LABOR AND MATERIAL WARRANTY AS IF CIRCUITS WERE PROVIDED AS NEW.

DEVICE MOUNTING HEIGHTS

1. MOUNT DOOR HOLDER SMOKE DETECTOR MAX. 3' FROM DOOR, MIN. 1'.
2. MAX. DISTANCE BETWEEN SMOKE DETECTORS 30' AND 15' FROM WALL, HEAT DETECTOR AT 50' MAX. AND 25' FROM WALL WITH CEILING 10' OR LESS.
3. MOUNT SMOKE DETECTOR MIN. 3' FROM SUPPLY DIFFUSER VENT.
4. MOUNT SMOKE DETECTOR FOR FIRE SMOKE DAMPER (FSD) WITHIN 3' OF SUPPLY DIFFUSER VENT.
5. DUCT SMOKE DETECTOR SHALL BE MOUNTED 6 TO 10 TIMES THE DIAMETER OF DUCT FROM BEND OR OBSTRUCTION.
6. WHERE DUCT SMOKE DETECTORS ARE INSTALLED IN CONCEALED LOCATION OR GREATER THAN 10' AFF. DETECTORS SHALL BE PROVIDED WITH A REMOTE INDICATOR OR SUPERVISORY INDICATION IN A LOCATION ACCEPTABLE WITH AUTHORITY HAVING JURISDICTION.
7. BEAM POCKET SPOT SMOKE DETECTORS ARE RE□UIRED FOR BEAMS GREATER THAN 12". BEAM POCKET SPOT HEAT DETECTORS ARE RE□UIRED FOR BEAMS GREATER THAN 18".
8. WITH BEAMS 4" OR LESS SMOKE DETECTORS MAY BE MOUNTED ON THE BOTTOM OF THE BEAM OR FLUSH ON CEILING. USE SHALLOW SURFACE BOX IF ON BEAM.
9. SPOT-TYPE SMOKE DETECTORS SHALL BE LOCATED ON THE CEILING OR, IF ON A SIDEWALL, BETWEEN THE CEILING AND 12 INCHES DOWN FROM THE CEILING TO THE TOP OF THE DETECTOR.
10. MOUNT MANUAL PULL STATION 44" TO 46" TO CENTER OF OPERABLE PART AND NO GREATER THAN 5' FROM RE□UIRED EXIT.
11. MOUNT EXTERIOR AUDIBLE AT 90" MIN. AND 100" MAX. TO THE TOP OF DEVICE.
12. FOR APPLICATIONS WHERE STRUCTURE IS BELOW 90". MOUNT AUDIBLE AS HIGH AS POSSIBLE WITH MIN. 6" CLEARENCE TO TOP OF DEVICE.
13. MOUNT AUDIO AND/OR VISUAL AT MAX. 96" TO TOP OF DEVICE. MIN. 80" TO THE BOTTOM OF DEVICE. MAXIMUM SEPARATION 100', MAXIMUM DISTANCE FROM END OF CORRIDOR 15'.
14. MOUNT FIRE ALARM SYSTEM REMOTE ANNUNCIATOR BETWEEN 48" AND 54".
15. MOUNT FIRE ALARM CONTROL PANEL BETWEEN 48" AND 66" TO CENTER OF DISPLAY.
16. PROVIDE ACCESS COMPLIANT SINGLE ACTION DEVICE.
17. SMOKE BEAM (TRANSMITTER/RECEIVER) MAX 30' FROM WALL, 60' MAX DEVICE SPACING.
18. SMOKE BEAM (REFLECTOR) MAX 30' FROM WALL, 60' MAX SPACING. MOUNT DIRECTLY OPPOSITE OF THE TRANSMITTER/RECEIVER. DO NOT MOUNT ON A REFLECTIVE SURFACE.
19. IDEAL HEIGHT IS 19" TO 24" CENTER OF THE DETECTOR BEAM BELOW CEILING. IF MOUNTING HEIGHT IS OVER 30' ABOVE THE FLOOR SPECIAL ENGINEERING CONSIDERATION MAY BE RE□UIRED.
20. DETECTOR DISTANCE , 15' TO 330' PER SPECIFIED MODEL.
21. ALL OBJECTS SHOULD BE KEPT A MINIMUM 0F 19" AWAY FROM THE CENTER OF THE DETECTOR BEAM.
22. MOUNT DUCT SMOKE DETECTOR REMOTES AND BEAM SMOKE DETECTOR REMOTES ON CEILING VIEWABLE FROM FLOOR OR ON WALL AT 72" TO CENTER OF DEVICE.
23. WHEN APPROVED FOR OPEN WIRE, PROVIDE A WIRE MANAGEMENT SYSTEM. TYPICALLY J-HOOK HANGERS OR LOOP STRAPS SPACED NO MORE THAN 48" APART. SHALL BE SELF SUPPORTING (SHALL NOT LAY ON CEILING OR E□UIPMENT), FREE FROM SPRINKLER, ELECTRICAL AND MECHANICAL SYSTEMS. RUN CIRCUITS PERPENDICULAR TO THE BUILDING STRUCTURE. ALL FIRE CIRCUITS SHALL BE CSFM LISTED, POWER LIMITED AND CORRECT RATING FOR APPLICATION (FPL, FPLP, FPLR). PROVIDE PROTECTIVE BUSHING AT BOXES AND CONDUIT STUBS.
24. SECURE CONDUIT TO STRUCTURE. PROVIDE FIRE STOP SYSTEM IF RATED ASSEMBLY. IF NON-RATED PROVIDE PROTECTIVE BUSHING.
25. MOUNT CONTROL RELAYS AND INPUT MODULES ON CEILING BELOW DEVICE INTERFACED WITH.
26. MOUNT 5/8" FIRE RATED PLYWOOD CUT TO SIZE FOR FIRE CONTROL E□UIPMENT.

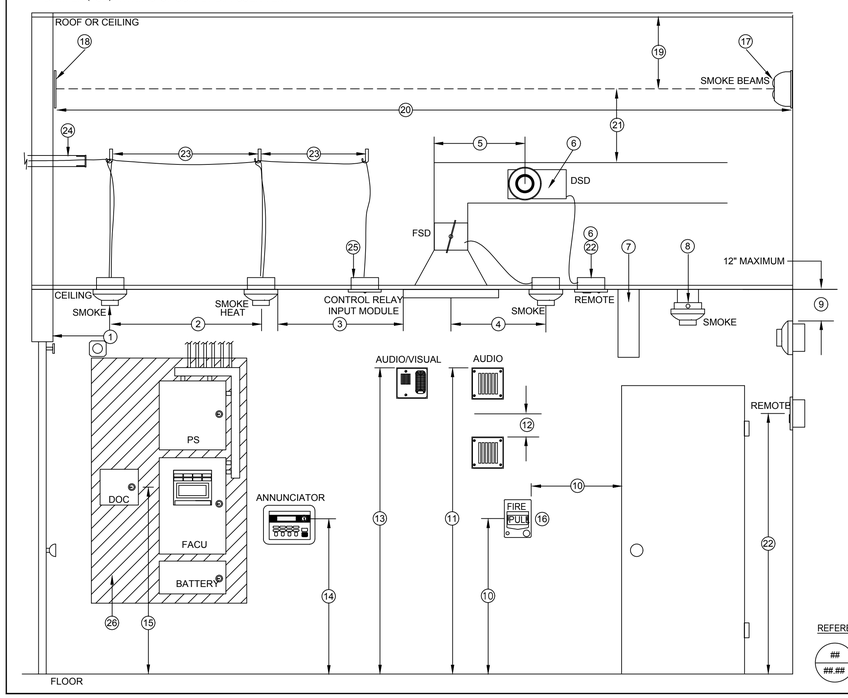

REFERENCE DETAIL
DETAIL NUMBER
##.## PAGE NUMBER

DEVICE MOUNTING HEIGHTS NTS (4)

SYMBOL LEGEND

SYMBOL	□TY	MANUFACTURER CATALOG #	DESCRIPTION	BACK BOXES (PROVIDED BY ELECTRICAL CONTRACTOR) MOUNTING (PROVIDED BY ELECTRICAL CONTRACTOR)	C.S.F.M.
FACU	1	EDWARDS EST3	FIRE ALARM CONTROL UNIT	ENCLOSURE SUPPLIED BY FIRE ALARM CONTRACTOR AND INSTALLED BY ELECTRICAL CONTRACTOR	7165-1657:0186
	1	EDWARDS 3-CPU3	CENTRAL PROCESSOR MODULE	MOUNTS INSIDE FACU	7165-1657:0186
	1	EDWARDS 3-RS485B	NETWORK COMMUNICATION CARD, CLASS B	MOUNTS INSIDE FACU	7165-1657:0186
	1	EDWARDS 3-SSDC1	SIGNATURE SINGLE DRIVER CONTROLLER	MOUNTS INSIDE FACU	7165-1657:0186
	1	EDWARDS 3-MODCOM	MODEM COMMUNICATOR AND DIALER	MOUNTS INSIDE FACU	7165-1657:0186
	1	EDWARDS 3-LCD	LI□UID CRYSTAL DISPLAY MODULE	MOUNTS INSIDE FACU	7165-1657:0186
	1	EDWARDS 3-PPS/M	PRIMARY POWER SUPPLY 120V	MOUNTS INSIDE FACU	7165-1657:0186
	2	EDWARDS 12V24A	26 AH BATTERY	MOUNTS INSIDE BC-1R	7165-1657:0186
	1	EDWARDS BC-1R	BATTERY CABINET, RED	PROVIDED AND INSTALLED BY ELECTRICAL CONTRACTOR	7165-1657:0186
	1	EDWARDS 3-CHAS7	CHASSIS ASSEMBLY FOR 7 LOCAL RAIL MODULES	MOUNTS INSIDE FACU	7165-1657:0186
	2	EDWARDS 3-LRMF	BLANK LRM FILLER	MOUNTS INSIDE FACU	7165-1657:0186
	3	EDWARDS 3-FP	FILLER PLATE FOR LRM DOOR	MOUNTS INSIDE FACU	---
	1	EDWARDS 3-CAB7B	BACK BOX W/7 LRM SPACE WITHOUT DOOR	PROVIDED AND INSTALLED BY ELECTRICAL CONTRACTOR	7165-1657:0186
	1	EDWARDS 3-CAB7DR	RED DOOR ASSEMBLY FOR 3-CAB7	PROVIDED AND INSTALLED BY ELECTRICAL CONTRACTOR	7165-1657:0186
FAA	1	EDWARDS 3-LCDANN	LCD ANNUNCIATOR W/ CPU, LCD DISPLAY AND DOORS	PROVIDED AND INSTALLED BY ELECTRICAL CONTRACTOR	7165-1657:0193
	1	EDWARDS RLCM/B	FLUSH BOX FOR 3-LCDANN	PROVIDED AND INSTALLED BY ELECTRICAL CONTRACTOR	7165-1657:0193
PS-1	1	EDWARDS BPS6A	6.5 AMP BOOSTER POWER SUPPLY	PROVIDED AND INSTALLED BY ELECTRICAL CONTRACTOR	7300-:1657:0229
	2	EDWARDS 12V6A	7.2 AH 12VOLT BATTERY	PROVIDED AND INSTALLED BY ELECTRICAL CONTRACTOR	---
P	1	EDWARDS SIGA-PD	INTELLIGENT PHOTOELECTRIC SMOKE DETECTOR	MOUNTS TO DETECTOR BASE	7272-1657:0331
	1	EDWARDS SIGA-SB4	STANDARD DETECTOR BASE, 4"	2-1/4" DEEP 4" S□UARE BOX	7300-1657:0120
	7	EDWARDS SIGA-SD	INTELLIGENT SUPERDUCT SMOKE DETECTOR	DUCT SMOKE DETECTOR SUPPLIED BY E.C. AND INSTALLED BY MECHANICAL CONTRACTOR	3242-1657:0223
	7	EDWARDS SIGA-T60	60-INCH SAMPLING TUBE	DUCT SMOKE TUBES SUPPLIED BY E.C. AND INSTALLED BY MECHANICAL CONTRACTOR	---
T	7	EDWARDS SD-TRK	REMOTE TEST STATION, KEYED, WITH ALARM LED	2-1/4" DEEP 4" S□ BOX W/SINGLE GANG MUD RING	7300-1657:0226
F	13	EDWARDS SIGA-278	INTELLIGENT DOUBLE ACTION PULL STATION	2-1/4" DEEP 4" S□ BOX W/SINGLE GANG MUD RING	7150-1657:0129
AIM	1	EDWARDS SIGA-CT1	SINGLE MONITOR MODULE	2-1/4" DEEP 4" S□ BOX W/SINGLE GANG MUD RING	7300-1657:0121
AIM	1	EDWARDS SIGA-CT2	DUAL MONITOR MODULE	2-1/4" DEEP 4" S□ BOX W/SINGLE GANG MUD RING	7300-1657:0121
CM	1	EDWARDS SIGA-CC1S	SYNCHRONIZATION OUTPUT MODULE	2-1/4" DEEP 4" S□ BOX W/DOUBLE GANG MUD RING	7300-1657:0121
CRM	7	EDWARDS SIGA-CR	CONTROL RELAY MODULE	2-1/4" DEEP 4" S□ BOX W/SINGLE GANG MUD RING	7300-1657:0121
ELR –W–	3	EDWARDS EOL-47	END OF LINE RESISTOR, 47K	---	---
	18	EDWARDS G1RF-HDVM	HORN STROBE, WALL MOUNT, RED, MULTI-CANDELA	2-1/4" DEEP 4" S□ BOX W/SINGLE GANG MUD RING	7125-1657:0202
	5	EDWARDS G1RF-VM	STROBE, WALL MOUNT, RED, MULTI-CANDELA	2-1/4" DEEP 4" S□ BOX W/SINGLE GANG MUD RING	7125-1657:0218
WF	1	BY SPRINKLER CONTRACTOR	WATERFLOW SWITCH	PROVIDED AND INSTALLED BY SPRINKLER CONTRACTOR	---
VS	1	BY SPRINKLER CONTRACTOR	VALVE TAMPER SWITCH	PROVIDED AND INSTALLED BY SPRINKLER CONTRACTOR	---
DOC	1	SPACE AGE ELEC. SSU00685/FAD ACE-11	DOCUMENTATION CABINET WITH 4 GIG FLASH DRIVE	ENCLOSURE TO BE SUPPLIED AND INSTALLED BY ELECTRICAL CONTRACTOR	7300-0553:0110
	---	--- ---	DEDICATED 120VAC NON GFI 20 AMP CIRCUIT	PROVIDED BY ELECTRICAL CONTRACTOR	---
	---	--- ---	2 DEDICATED PHONE LINES AND PHONE JACKS	PROVIDED BY TELECOM CONTRACTOR	---

SYMBOL LEGEND NTS (2)

GENERAL NOTES

1. ALL WIRING SHALL BE INSTALLED IN ACCORDANCE WITH N.E.C. ARTICLE 760, POWER LIMITED FIRE PROTECTIVE SIGNALING CIRCUITS.
2. UPON COMPLETION OF THE INSTALLATION OF THE FIRE ALARM SYSTEM, A SATISFACTORY TEST OF THE ENTIRE SYSTEM SHALL BE MADE IN THE PRESENCE OF THE AUTHORITY HAVING JURISDICTION/IOR/DSA BY THE FIRE ALARM INSTALLING COMPANY. THE LOCAL FIRE AUTHORITY SHALL BE NOTIFIED OF DATE AND TIME OF FINAL FIRE ALARM TESTING AND MAY WITNESS SUCH TESTING WHEN ABLE.
3. A STAMPED SET OF APPROVED FIRE ALARM PLANS SHALL BE ON THE JOB SITE AND USED FOR INSTALLATION. ANY DEVIATION FROM APPROVED PLANS, INCLUDING THE SUBSTITUTION OF DEVICES, SHALL BE APPROVED BY THE FIRE MARSHAL.
4. ANY DISCREPANCIES BETWEEN THE DRAWINGS AND THE CODE OR RECOGNIZED STANDARDS SHALL BE BROUGHT TO THE ATTENTION OF THE INSPECTOR OF RECORD.
5. ALL DEVICES OF THE FIRE ALARM SYSTEM SHALL BE APPROVED AND LISTED BY THE CALIFORNIA STATE FIRE MARSHAL.
6. FIRE ALARM DEVICES SHALL BE INSTALLED PER N.F.P.A. 72.
7. WIRING SHALL NOT BE LOOPED THROUGH DEVICES. WIRE MUST BE CUT AT EACH DEVICE. CIRCUITS SHALL NEVER BE SPLICED. ALL TERMINATIONS SHALL BE AT PANELS, AT TERMINAL CANS ON TERMINAL STRIPS OR AT DEVICES.
8. ALL CONDUCTORS SHALL BE COPPER AND PROPERLY LABELED AT PANELS AND TERMINAL CANS.
9. SYSTEM IS POWER LIMITED. ALL CIRCUITS SHALL BE PROTECTED BELOW 7' WITHIN THE STRUCTURE OR IN CONDUIT AS INDICATED ON FLOOR PLAN.
10. ALL DEVICES IN THE ALARM SYSTEM SHALL BE COMPATIBLE AND INSTALLED TO MANUFACTURERS SPECIFICATIONS.
11. AUDIBILITY OF ALARM FOR PUBLIC MODE SHALL BE AT LEAST 15 dBA (OR 10dBA PRIVATE MODE) ABOVE AMBIENT SOUND THROUGHOUT AREA OF NOTIFICATION AND NO GREATER THAN 110dBA AT THE MINIMUM HEARING DISTANCE. SLEEPING AREAS SHALL BE AT LEAST 15dBA ABOVE AMBIENT SOUND LEVEL OR A SOUND LEVEL OF AT LEAST 75dBA. IF FIRE ALARM TESTING RESULTS DETERMINE THAT THESE MINIMUM STANDARDS ARE NOT MET, ADDITIONAL AUDIBILITY WILL BE RE□UIRED.
12. AREAS HAVING MORE THAN 2 STROBES IN THE SAME FIELD OF VIEW SHALL BE SYNCHRONIZED TOGETHER.
13. SMOKE DETECTORS AND HEAT DETECTOR LOCATION ARE BASED ON SMOOTH CEILING WITH MAXIMUM HEIGHT OF 10 FEET UNLESS OTHERWISE NOTED.
14. CEILING MOUNTED STROBES ARE BASED ON 10 FOOT CEILING HEIGHT AND ARE INSTALLED ACCORDING TO NFPA 72 RE□UIREMENTS UNLESS OTHERWISE NOTED.
15. WALL-MOUNTED STROBES SHALL HAVE THEIR LENS BOTTOM NOT LESS THAN 80 INCHES AND THEIR LENS TOP NO GREATER THAN 96 INCHES ABOVE FINISHED FLOOR.
16. VISUAL DEVICES SHALL NOT EXCEED 2 FLASHES PER SECOND AND NOT LESS THAN 1 FLASH PER SECOND. ALL VISUAL DEVICES WITHIN NORMAL VIEWING RANGE SHALL BE SYNCHRONIZED.
17. THE OPERABLE PART OF A MANUAL FIRE ALARM BOX SHALL BE BETWEEN 44" AND 46" ABOVE FINISHED FLOOR.
18. POWER FOR THE FIRE ALARM CONTROL UNIT IS TO BE PROVIDED BY A DEDICATED CIRCUIT BREAKER. INDICATE LOCATION OF THIS BREAKER AT THE FACU. BREAKER TO BE RED AND LABELED "FIRE ALARM".
19. ELECTRICAL POWER SERVICE SHALL BE ON A DEDICATED CIRCUIT(S). THE CIRCUIT(S) AND CONNECTIONS SHALL BE MECHANICALLY PROTECTED (CIRCUIT BREAKERS SHALL BE LOCKED IN THE ON POSITION WITH AN APPROVED MECHANICAL CLIP.). CIRCUIT DISCONNECTING MEANS SHALL HAVE A RED MARKING, SHALL BE ACCESSIBLE ONLY TO AUTHORIZED PERSONNEL, AND SHALL BE IDENTIFIED AS "FIRE ALARM CIRCUIT". THE LOCATION OF THE CIRCUIT DISCONNECTING MEANS SHALL BE PERMANENTLY IDENTIFIED AT THE FIRE ALARM CONTROL UNIT.
20. DUCT DETECTORS SHALL BE FURNISHED BY ELECTRICAL CONTRACTOR AND INSTALLED BY MECHANICAL CONTRACTOR. HVAC CONTROL SHALL BE BY MECHANICAL CONTRACTOR. FIRE ALARM CONTRACTOR SHALL MONITOR DUCT DETECTOR.
21. DUCT DETECTOR AND FIRE SMOKE DAMPER POWER SHALL BE PROVIDED BY THE ELECTRICAL CONTRACTOR.
22. FIRE ALARM CONDUCTORS USED IN WET OR UNDERGROUND LOCATIONS SHALL BE OF A WATER-BLOCKING TYPE.
23. FIRE ALARM SYSTEM "RECORD OF COMPLETION" DOCUMENT SHALL BE SIGNED BY THE FIRE ALARM CONTRACTOR AND PROVIDED TO THE PROJECT INSPECTOR/DSA AND PROVIDED TO THE CLIENT ALONG WITH THE OTHER RE□UIRED CLOSE-OUT DOCUMENTATION AT THE TIME OF SYSTEM ACCEPTANCE AND APPROVAL PER NFPA 72 BY THE FIRE ALARM INSTALLING COMPANY.
24. WHERE A SMOKE DAMPER IS INSTALLED WITHIN A DUCT, A SMOKE DETECTOR SHALL BE INSTALLED IN THE DUCT WITHIN 5 FEET OF THE DAMPER WITH NO AIR OUTLETS OR INLETS BETWEEN THE DETECTOR AND THE DAMPER. THE DETECTOR SHALL BE LISTED FOR THE AIR VELOCITY, TEMPERATURE AND HUMIDITY ANTICIPATED AT THE POINT WHERE IT IS INSTALLED. OTHER THAN IN MECHANICAL SMOKE CONTROL SYSTEMS, DAMPERS SHALL BE CLOSED UPON FAN SHUTDOWN .
25. WHERE A SMOKE DAMPER IS INSTALLED ABOVE SMOKE BARRIER DOORS IN A SMOKE BARRIER, A SPOT-TYPE DETECTOR LISTED FOR FOR RELEASING SERVICE SHALL BE INSTALLED ON EITHER SIDE OF THE SMOKE BARRIER DOOR OPENING.
26. WHERE A SMOKE DAMPER IS INSTALLED WITHIN AN AIR TRANSFER OPENING IN A WALL, A SPOT-TYPE DETECTOR LISTED FOR RELEASING SERVICE SHALL BE INSTALLED WITHIN 5 FEET HORIZONTALLY OF THE DAMPER.
27. WHERE A SMOKE DAMPER IS INSTALLED IN A CORRIDOR WALL OR CEILING, THE DAMPER SHALL BE PERMITTED TO BE CONTROLLED BY A SMOKE DETECTION SYSTEM INSTALLED IN THE CORRIDOR.
28. WHERE A TOTAL-COVERAGE SMOKE DETECTOR SYSTEM IS PROVIDED WITHIN AREAS SERVED BY A HEATING, VENTILATION AND AIR-CONDITIONING (HVAC) SYSTEM, SMOKE DAMPERS SHALL BE PERMITTED TO BE CONTROLLED BY THE SMOKE DETECTION SYSTEM.

(7)

CIRCUIT PATHWAY LEGEND

G	-		ELECTRICAL GROUND BOX	PROVIDED BY ELECTRICAL CONTRACTOR
J	-		ELECTRICAL JUNCTION BOX	PROVIDED BY ELECTRICAL CONTRACTOR
	-		RISER UP	PROVIDED BY ELECTRICAL CONTRACTOR
	-		RISER DOWN	PROVIDED BY ELECTRICAL CONTRACTOR
	-		ELECTRICAL CONDUIT	PROVIDED BY ELECTRICAL CONTRACTOR
	-		UNDERGROUND ELECTRICAL CONDUIT	PROVIDED BY ELECTRICAL CONTRACTOR

CIRCUIT PATHWAY LEGEND NTS (6)

DEVICE ID

ADDRESSABLE DEVICES:

01.02.0002
- DENOTES DEVICE'S POINT ADDRESS
- DENOTES LRM'S SLOT ADDRESS
- DENOTES PANEL'S CABINET NUMBER
- DEVICE'S SYMBOL

NOTIFICATION DEVICES:

15CD 1.1.01
- END-OF-LINE RESISTOR
- ELR 1.1 — DENOTES END-OF-LINE RESISTOR FOR CIRCUIT #1.1
- DENOTES CANDELA RATING
- DENOTES NOTIFICATION DEVICE NUMBER
- DENOTES NOTIFICATION CIRCUIT NUMBER
- DENOTES BOOSTER PANEL #
- DENOTES AUDIO/VISUAL DEVICE SYMBOL

DEVICE ID NTS (5)

WIRE LEGEND

□TY	CALLOUT	USAGE	TYPE	COLOR
1000'	S	ADDRESSABLE (SLC) CIRCUIT	2#18 FPLR (UNSHIELDED) TWISTED-PAIR, SOLID	RED
100'	A	ANNUNCIATOR CIRCUIT	4#18 FPLR (UNSHIELDED) 2#14 FPLR (UNSHIELDED) SOLID PAIR	RED
825'	N	NOTIFICATION CIRCUIT	2#12 FPLR (UNSHIELDED) SOLID PAIR	RED
	T	NOTIFICATION SYNC CIRCUIT	2#14 FPLR (UNSHIELDED) SOLID PAIR	RED
	P	AUXILIARY POWER CIRCUIT	2#14 FPLR (UNSHIELDED) SOLID PAIR	RED
300'	C	CONTROL CIRCUIT	2#14 FPLR (UNSHIELDED) SOLID PAIR	RED
	D	DOOR HOLDER CIRCUIT	2#14 FPLR (UNSHIELDED) SOLID PAIR	WHITE
	R	RESETTABLE POWER	2#14 FPLR (UNSHIELDED) SOLID PAIR	RED
	H	SOUNDER BASE CIRCUIT	2#14 FPLR (UNSHIELDED) SOLID PAIR	RED
300'	K	DUCT DETECTOR KEYED DUCT TEST CIRCUIT	4#18 FPLR (UNSHIELDED) SOLID PAIR	RED
	F	CLASS 'B' CIRCUIT	2#18 FPLR (UNSHIELDED) TWISTED-PAIR, SOLID	□RED - BLACK
	V	VOICE CIRCUIT	2#16 FPLR (SHIELDED) TWISTED-PAIR, SOLID	□RED - BLACK
	M	DATA CIRCUIT	CAT6	BLUE
□500' *	U	UNDERGROUND IN CONDUIT CIRCUIT	2#16 WATER-BLOCKING TWISTED-PAIR, SOLID (UNSHIELDED)	GRAY □RED - BLK
	SU	ADDRESSABLE (SLC) CIRCUIT UNDERGROUND IN CONDUIT	2#18 WATER-BLOCKING TWISTED-PAIR, SOLID (UNSHIELDED)	GRAY □RED - BLK
	E	120VAC CIRCUIT	2#12 THHN SOLID	WHITE BLACK
	G	DATA CIRCUIT	1#12 THHN	GREEN

1) ALL CONDUIT, BACKBOXES AND CIRCUIT PATHWAY PROVIDED BY: ELECTRICAL CONTRACTOR
2) ALL WIRE AND CIRCUITS PROVIDED BY: FIRE ALARM CONTRACTOR
3) PROVIDE PLENUM AND/OR RISER FPL CIRCUITS WHEN RE□UIRED
4) ALL EXTERIOR CIRCUITS SHALL BE RATED FOR WET CONDITIONS
5) INSTALL, TERMINATE AND MANAGE CIRCUITS PER 2016 CEC, CBC, NFPA 72.

* SITE VERIFY EXACT DISTANCE.

WIRE LEGEND NTS (3)

DEVICE CARD LAYOUT

TYPICAL EST3 POINT ID

CARD #	DEVICE	MODULE
2 - SLC 1	1-125	126-250
2 - SLC 2	251-375	376-500
3 - SLC 1	1-125	126-250
3 - SLC 2	251-375	376-500

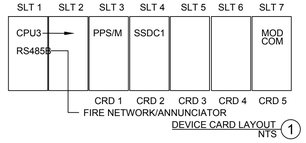

DEVICE CARD LAYOUT NTS (1)

APPLICABLE CODES

THE FIRE ALARM SYSTEM SHALL CONFORM TO THE FOLLOWING CODES:
CALIFORNIA CODE OF REGULATIONS (CCR), TITLE 19
CCR, TITLE 24, PART 2: 2016 CALIFORNIA BUILDING CODE (CBC)
CCR, TITLE 24, PART 3: 2016 CALIFORNIA ELECTRICAL CODE (CEC)
CCR, TITLE 24, PART 4: 2016 CALIFORNIA MECHANICAL CODE (CMC)
CCR, TITLE 24, PART 9: 2016 CALIFORNIA FIRE CODE (CFC)
CCR, 2016 CALIFORNIA ELEVATOR SAFETY CONSTRUCTION CODE
NATIONAL FIRE PROTECTION ASSOCIATION (NFPA) 72, 2016 EDITION
LOCAL JURISDICTION AMENDMENTS TO STATE CODE

OWNER:
Solano Community College Dist
2000 North Village Parkway
Vacaville, CA 95688

ARCHITECT:
CA ARCHITECTS
475 Gate Five Road, Suite 107
Sausalito, CA 94965
T 415.331.7655
F 415.331.7656

PROJECT:
Vacaville Classroom Building (Annex) Renovation Project

CONSULTANT TEAM:

STAMP
LICENSED ARCHITECT
JOSHUA COHN
C 23410
REN. 11-30-17
STATE OF CALIFORNIA

SHEET LEGEND:

ISSUE/REVISION:

NO:	DATE:	DESCRIPTION:
	04/25/2017	ISSUE FOR DD 100%
	06/06/2017	ISSUE FOR CD 50%
	06/30/2017	ISSUE FOR CD 60%
	07/20/2017	ISSUE FOR CD 100%
	10/02/2017	ISSUE FOR CD 100%

KEY PLAN:

FILE: 48-C1
IDENTIFICATION STAMP
DIVISION OF THE STATE ARCHITECT
02-116082
AC TCC FLS GBC SS PVL
DATE: 10/31/2017

SCALE:
DATE:
PROJECT NO:
PERMIT APPLICATION NO.:

LEGEND, NOTES & MOUNTING HEIGHT DETAILS

FA1.01

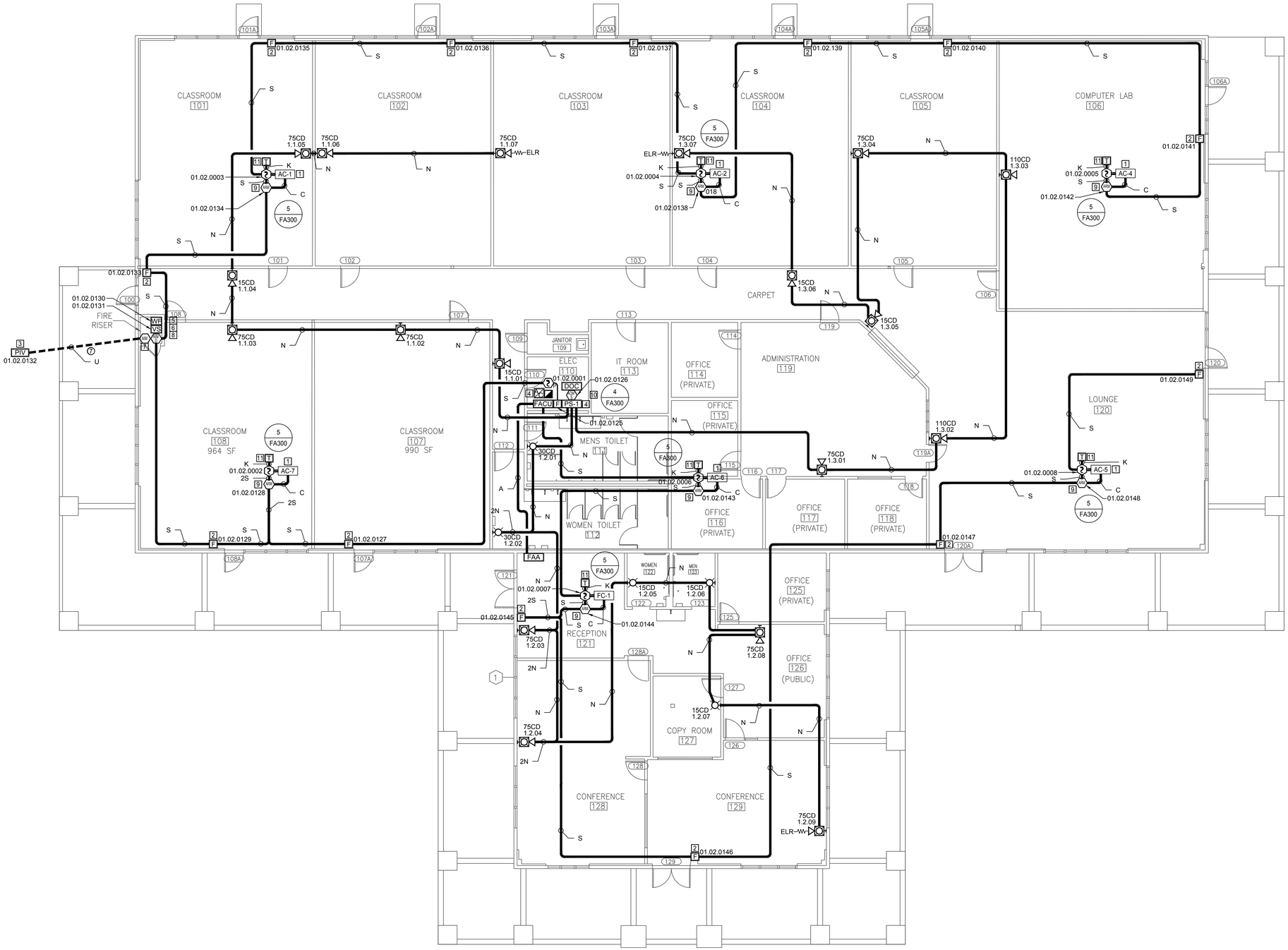

S□UARE NUMBERED NOTES ARE COMMON TO ALL □FA' SERIES' SHEETS

1. FIELD VERIFY EXACT LOCATION OF AC UNITS.
2. NEW MANUAL PULL STATIONS. INSTALL PER 2016 NFPA 72 RE□UIREMENTS. MOUNT MANUAL PULL STATION 48" TO CENTER OF OPERABLE PART AND NO GREATER THAN 5' FROM RE□UIRED EXIT.
3. FIELD VERIFY EXACT LOCATION OF PIV
4. 120VAC 20AMP DEDICATED POWER FOR FIRE PANELS/POWER SUPPLY
5. INSTALL MODULE IN WEATHERPROOF J-BOX. CONNECT WITH 3/4" FLEX TO FLOW SWITCH
6. INSTALL MODULE IN WEATHERPROOF J-BOX. CONNECT WITH 3/4" FLEX TO FLOW SECTION VALVE
7. INSTALL MODULE IN WEATHERPROOF J-BOX. CONNECT WITH 1" UNDERGROUND CONDUIT TO PIV/ OS&Y/ SECTION
8. VALVE/TAMPER SWITCH
9. INTERFACE AND CONTROL HVAC E□UIPMENT
10. POWER EXPANDER TRIP
11. LOCATE REMOTE TEST STATION ON CEILING TILE BENEATH AIR CONDITIONING UNIT.

ROUND NUMBERED NOTES ARE COMMON TO ALL □FA' SERIES' SHEETS

1. 3/4" CONDUIT EMT
2. 1 " CONDUIT EMT
3. 1 1/4" CONDUIT EMT
4. 2" CONDUIT EMT
5. 1" FLEX CONDUIT WP
6. 3/4" CONDUIT PVC
7. 1 " CONDUIT PVC
8. 1 1/4" CONDUIT PVC
9. 2" CONDUIT PVC
10. 4" CONDUIT PVC
11. 3/4" CONDUIT IMC
12. 1 " CONDUIT IMC
13. 1 1/4" CONDUIT IMC
14. 2" CONDUIT IMC

JUNCTION BOX SCHEDULE

SYMBOL	H (INCHES)	W (INCHES)	D (INCHES)
J1	2	4	2.5
J2	4	4	2.25
J3	6	6	4
J4	12	12	4
J5	18	18	6
J6	24	24	8

GENERAL SHEET NOTES

1) MINIMUM CONDUIT SIZE SHALL BE 3/4". ELECTRICAL CONTRACTOR SHALL SIZE CONDUIT TO A MAXIMUM 40% FILL RATE.
2) ALL FIRE ALARM DEVICES SHALL BE MOUNTED TO A BACKBOX.
3) CIRCUITS SHALL NOT BE SPLICED. LOOP CIRCUITS CONTINUOUSLY THROUGH UNDERGROUND PULL BOXES AND JUNCTION CANS. TERMINATE CIRCUITS AT DEVICES AND AT FIRE ALARM TERMINAL CANS ONLY WITH CIRCUITS LABELED ON TERMINAL STRIPS. T-TAPPING OF DATA CIRCUITS ARE ONLY ALLOWABLE IN LOCATIONS INDICATED ON FLOOR PLANS.
4) DEVICE MOUNTING AND BACK BOXES SHALL BE PER MANUFACTURERS RECOMMENDATIONS.
5) REFERENCE 'E' SHEETS FOR INFRASTRUCTURE CIRCUIT PATHWAY.
6) CIRCUIT PATHWAY IS DIAGRAMMATIC FOR EASE OF ILLUSTRATION. INSTALLING CONTRACTOR MAY REROUTE AS NECESSARY. ALTERNATE ROUTES SHALL BE PRE-APPROVED BY THE PROJECT MANAGER AND UPDATED ON THE AS-BUILTS/RECORD SET.
7) DEVICE LOCATION IS ACTUAL, ANY DEVIATION MUST BE APPROVED BY THE PROJECT MANAGER.
8) RUN ALL CIRCUITS IN CONDUIT, 3/4" MINIMUM.
9) NON-DOCUMENTED FIRE DEVICES AND ANCILLARY CONTROL OR E□UIPMENT NOT SHOWN ON THE DESIGN DRAWING SHALL BE BROUGHT TO THE PROJECT MANAGERS ATTENTION FOR INTERFACING INTO THIS SYSTEM.
10) UNDERGROUND TO BUILDING CIRCUIT CONNECTIONS SHALL BE MADE ON TERMINAL STRIPS.
11) INITIATING DEVICE ADDRESSES SHALL BE FIELD PROGRAMMED AND DOCUMENTED ON CONTRACTOR PROVIDED AS-BUILTS.
12) DUCT MOUNTED SMOKE DETECTORS SHALL BE PROVIDED BY FIRE ALARM CONTRACTOR, INSTALLED AND INTERLOCKED FOR FAN SHUTDOWN BY MECHANICAL CONTRACTOR, AND WIRED TO FIRE ALARM CONTROL UNIT BY FIRE ALARM CONTRACTOR.

OWNER:

Solano Community College Dist
2000 North Village Parkway
Vacaville, CA 95688

ARCHITECT:

CA ARCHITECTS
475 Gate Five Road, Suite 107
Sausalito, CA 94965
T 415.331.7655
F 415.331.7656

PROJECT:

Vacaville Classroom Building (Annex) Renovation Project

CONSULTANT TEAM:

STAMP

LICENSED ARCHITECT
JOSHUA COHN
C 23410
REN. 11-30-17
STATE OF CALIFORNIA

SHEET LEGEND:

ISSUE/REVISION:

NO:	DATE:	DESCRIPTION:
	04/25/2017	ISSUE FOR DD 100%
	06/06/2017	ISSUE FOR CD 50%
	06/30/2017	ISSUE FOR CD 60%
	07/20/2017	ISSUE FOR CD 100%
	10/02/2017	ISSUE FOR CD 100%

KEY PLAN:

FILE: 48-C1

IDENTIFICATION STAMP
DIVISION OF THE STATE ARCHITECT
02-116082
AC JCC FLS GBC SS PVL
DATE: 10/31/2017

SCALE:
DATE:
PROJECT NO:
PERMIT APPLICATION NO.:

FLOOR PLAN

FA2.00

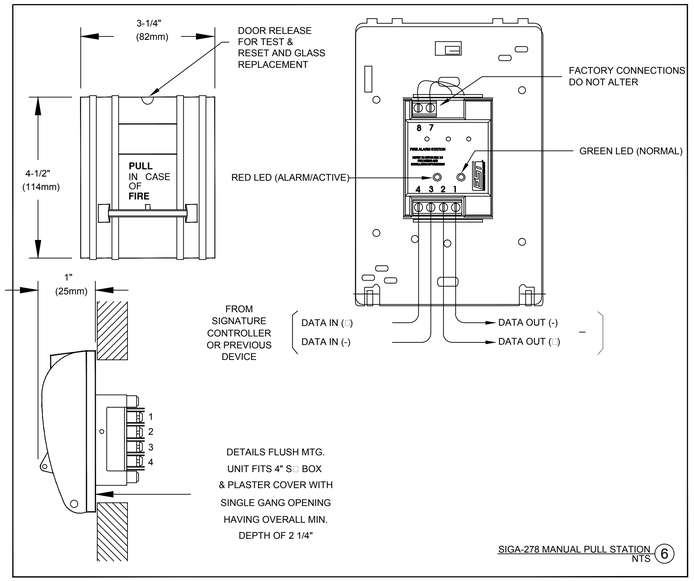

SIGA-278 MANUAL PULL STATION NTS (6)

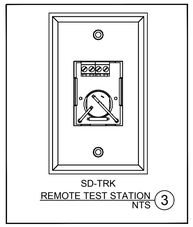

SD-TRK
REMOTE TEST STATION NTS (3)

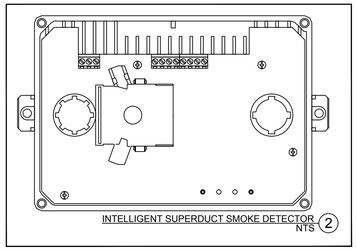

INTELLIGENT SUPERDUCT SMOKE DETECTOR NTS (2)

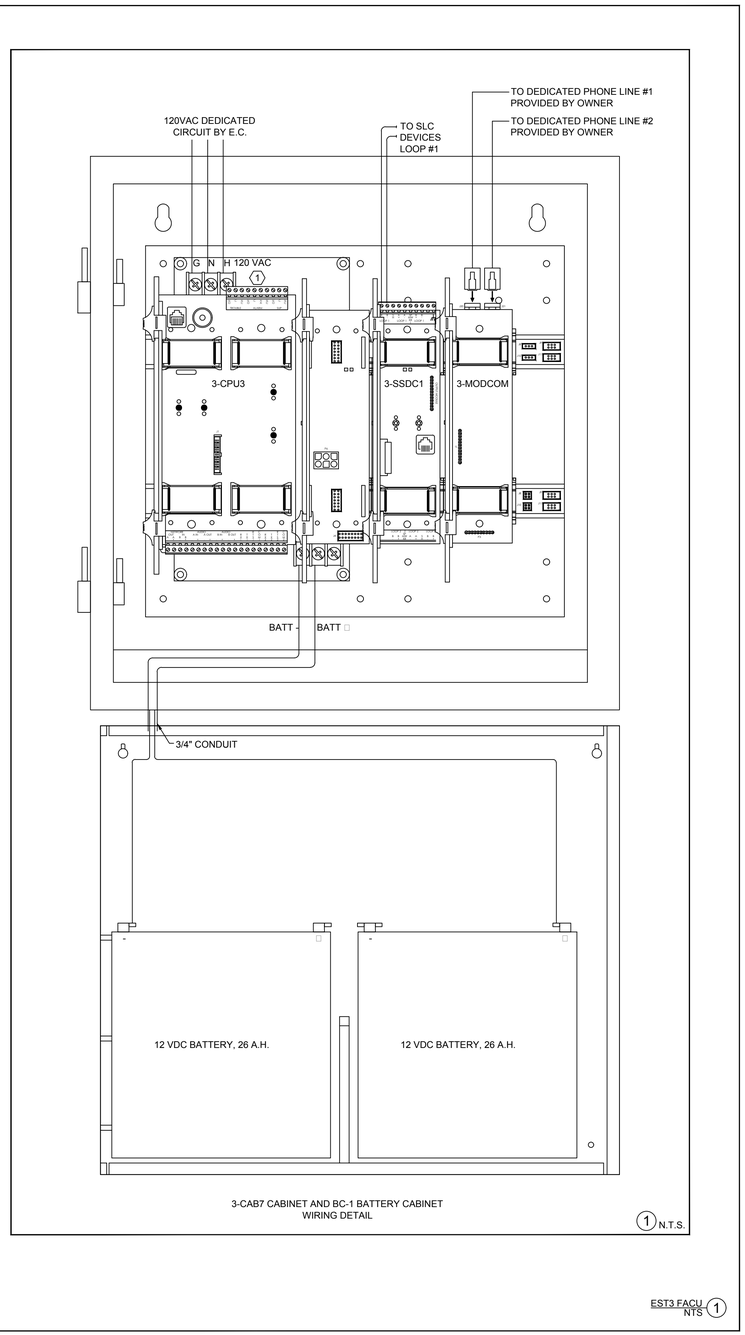

3-CAB7 CABINET AND BC-1 BATTERY CABINET
WIRING DETAIL

1 N.T.S.

EST3 FACU NTS (1)

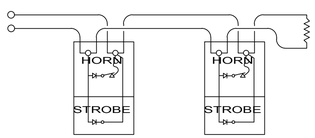

FIGURE 1

USE BOTH SIDES OF
TERMINAL SCREW AS
SHOWN IN FIGURE 1

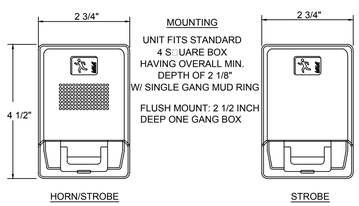

MOUNTING

UNIT FITS STANDARD
4 S□UARE BOX
HAVING OVERALL MIN.
DEPTH OF 2 1/8"
W/ SINGLE GANG MUD RING

FLUSH MOUNT: 2 1/2 INCH
DEEP ONE GANG BOX

HORN/STROBE

STROBE

WALL MOUNT HORN/STROBE & STROBE NTS (7)

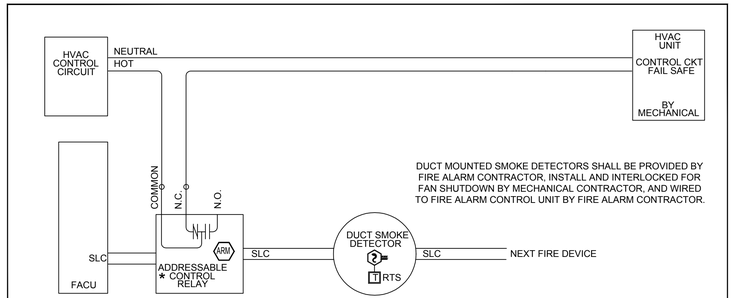

DUCT MOUNTED SMOKE DETECTORS SHALL BE PROVIDED BY
FIRE ALARM CONTRACTOR, INSTALL AND INTERLOCKED FOR
FAN SHUTDOWN BY MECHANICAL CONTRACTOR, AND WIRED
TO FIRE ALARM CONTROL UNIT BY FIRE ALARM CONTRACTOR.

TYPICAL HVAC INTERFACE WHEN ADDRESSABLE RELAY CURRENT AND VOLTAGE RATING IS NOT EXCEEDED NTS (5)

* CONTROL RELAY RATED AT 120VAC .5A MAX. USE PAM-1 IF RATING IS EXCEEDED.

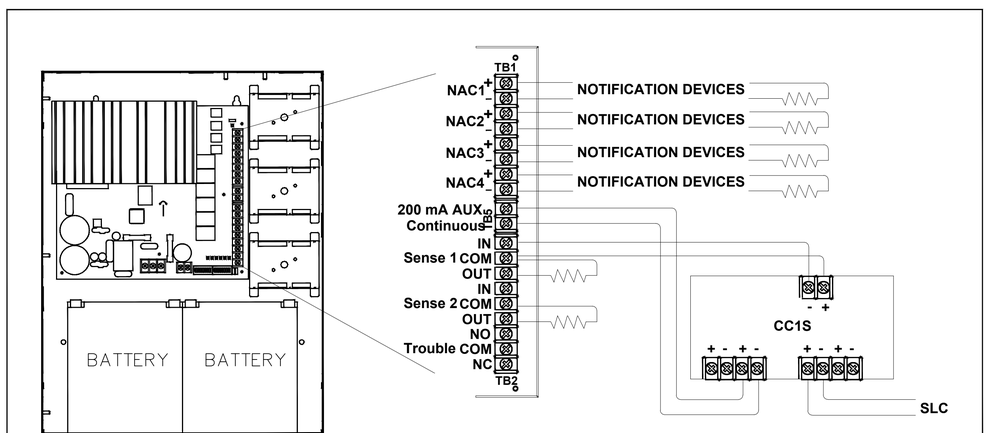

BPS6A POWER SUPPLY NTS (4)

OWNER:

Solano Community College Dist
2000 North Village Parkway
Vacaville, CA 95688

ARCHITECT:

CA ARCHITECTS
475 Gate Five Road, Suite 107
Sausalito, CA 94965
T 415.331.7655
F 415.331.7656

PROJECT:

Vacaville Classroom Building
(Annex) Renovation Project

CONSULTANT TEAM:

STAMP

LICENSED ARCHITECT
JOSHUA COHN
C 23410
REN. 11-30-17
STATE OF CALIFORNIA

SHEET LEGEND:

ISSUE/REVISION:

NO:	DATE:	DESCRIPTION:
	04/25/2017	ISSUE FOR DD 100%
	06/06/2017	ISSUE FOR CD 50%
	06/30/2017	ISSUE FOR CD 60%
	07/20/2017	ISSUE FOR CD 100%
	10/02/2017	ISSUE FOR CD 100%

KEY PLAN:

FILE: 48-C1
IDENTIFICATION STAMP
DIVISION OF THE STATE ARCHITECT
02-116082
AC JCC FLS GBC SSPVL
DATE: 10/31/2017

SCALE:
DATE:
PROJECT NO:
PERMIT APPLICATION NO.:

DEVICE DETAILS

FA3.00

EST Voltage Drop/ Power Supply - Battery Calculations

EST™ Life Safety & Communications

PS #1 — **Volt Drop Common Parameters**

Depleted Battery Voltage per UL Product Listing **20.4 Volts**

Wire Size 12 AWG
Wire Resistance 2.05 ohm/Kft

		Type	Device current @ 24 VDC	NAC #1 Current	NAC #1 Qty	NAC #2 Current	NAC #2 Qty	NAC #3 Current	NAC #3 Qty	NAC #4 Current
Strobes	Wall Mount GL1	15cd	0.030	D	0		0		0	0
		30cd	0.040	D	0		0		0	0
		75cd	0.115	D	0		0		0	0
		110cd	0.200	D	0		0		0	0
	Wall Mount G1-VM	15cd	0.059		3	0.177	0		0	0
		30cd	0.082	D	2	0.164	0		0	0
		75cd	0.152	D	0		0		0	0
		110cd	0.191	D	0		0		0	0
	Ceiling Mount GC-VM	15cd	0.063	D			0		0	0
		30cd	0.090	D	0		0		0	0
		75cd	0.168	D	0		0		0	0
		95cd	0.194	D	0		0		0	0
		115cd	0.245	D	0		0		0	0
		150cd	0.306	D	0		0		0	0
		177cd	0.342	D	0		0		0	0
	Weatherproof Wall Mount 405	15cd	0.069	D	0		0		0	0
		30cd	0.089	D	0		0		0	0
		60cd	0.158	D	0		0		0	0
		110cd	0.180	D	0		0		0	0
Horns	Wall Mount G4LF	Temporal	0.112	D	0		0		0	0
	Wall Mount WGR	Temporal	0.049	D	0		0		0	0
Horn-Strobes	Wall Mount GL1	15cd	0.040	D	0		0		0	0
		30cd	0.046	D	0		0		0	0
		75cd	0.125	D	0		0		0	0
		110cd	0.219	D	0		0		0	0
	Wall Mount G1-HDVM	15cd	0.081	E	0.162		0		2	0.162	0
		30cd	0.094	D	0		0		0	0	0
		75cd	0.161	S	0.805		4	0.644	3	0.483	0
		110cd	0.203	D			0		2	0.406	0
	Ceiling Mount GC-HDVM	15cd	0.080	D			0		0		0
		30cd	0.108	D			0		0		0
		75cd	0.185	D			0		0		0
		95cd	0.212	D			0		0		0
		115cd	0.252	D			0		0		0
		150cd	0.304	D			0		0		0
		177cd	0.341	D			0		0		0
	Weatherproof Wall Mount 757	15cd	0.109	D			0		0		0
		30cd	0.129	D			0		0		0
		75cd	0.199	D			0		0		0
		110cd	0.220	D			0		0		0
Chime-Strobes	Wall Mount G1-CVM	15cd	0.085	D			0		0		0
		30cd	0.105	D			0		0		0
		75cd	0.174	D			0		0		0
		110cd	0.214	D			0		0		0
Chime	Wall Mount G1-C	Temporal	0.044		0		0		0		0
			Total Devices		7		9		7		0
			Circuit Load (A)		0.97		0.99		1.05		0.00
			Circuit Length (ft)		200		300		325		0
			Voltage Drop (V)		0.79		1.21		1.40		0.00
			Voltage Drop (%)		3.89%		5.94%		6.86%		0.00%

Edwards Systems Technology

www.est.net

POWER SUPPLY #1 VOLTAGE DROP CALCULATIONS
NTS (4)

Battery Calculations

Power Supply **PS-A**
Location **ELEC RM 110**

HOURS OF SUPERVISION **24**
MINUTES OF ALARM **5**

PANEL INTERNAL SUPERVISORY CURRENT

			QTY	STANDBY CURRENT AMPS	ALARM CURRENT TOTAL AMPS	AMPS	TOTAL AMPS
			-	0.07	0.07	N/A	N/A
Strobes	Wall Mount GL1	15cd				0.030	
		30cd				0.040	
		75cd				0.115	
		110cd				0.200	
	Wall Mount G1-VM	15cd	3			0.059	0.177
		30cd	2			0.082	0.164
		75cd				0.151	
		110cd				0.191	
	Ceiling Mount GC-VM	15cd				0.063	
		30cd				0.090	
		75cd				0.168	
		95cd				0.194	
		115cd				0.245	
		150cd				0.306	
		177cd				0.342	
	Weatherproof Wall Mount 405	15cd				0.069	
		30cd				0.089	
		60cd				0.158	
		110cd				0.180	
Horns	Wall Mount G4LF	Temporal				0.030	
	Wall Mount WGR	Temporal				0.027	
Horn-Strobes	Wall Mount GL1	15cd				0.040	
		30cd				0.046	
		75cd				0.125	
		110cd				0.219	
	Wall Mount G1-HDVM	15cd	4			0.081	0.324
		30cd				0.094	
		75cd	12			0.161	1.932
		110cd	2			0.203	0.406
	Wall Mount GC-HDVM	15cd				0.080	
		30cd				0.108	
		75cd				0.185	
		95cd				0.212	
		115cd				0.252	
		150cd				0.304	
		177cd				0.341	
	Weatherproof Wall Mount 757	15cd				0.109	
		30cd				0.129	
		75cd				0.199	
		110cd				0.220	
Chime-Strobes	Wall Mount G1-CVM	15cd				0.085	
		30cd				0.105	
		75cd				0.174	
		110cd				0.214	
Chime	Wall Mount G1-C	Temporal				0.044	
TOTAL			23	**0.07**			**3.003**

Total Supervisory Current	0.07
Stand-By Hours	24
Sub- Total	1.68
Total Alarm Current	3.003
Alarm Minutes	5
Sub- Total	0.250
Total Supervisory Current	1.680
Total Alarm Current	0.250
Derate Factor 20%	0.386
Grand Total AMP Hrs required 2.3163	

7 AMP HOUR BATTERIES REQUIRED

POWER SUPPLY #1 BATTERY CALCULATIONS
NTS (3)

EST3 PANEL LOAD CALCULATIONS

EST™ Life Safety & Communications

Battery Safety Factor 1.2

Standby Time (Hrs) 24 — **EST3 Number:** FACP-1

Alarm Time (Mins) 5 — **Building/Area:** Electrical Room

FACP PANEL CALCULATIONS — Calculated Power Supply: 1.49 Amps; Calculated Batteries 17.21 Ah

Model Number	Description	Qty	Stdby Amps (mA)	Total Stdby	Alarm Amps (mA)	Total Alarm
EST3 CPU & Display						
3-CPU3	Central Processor Module	2	145.0	290.0	155.0	310.0
3-LCD	Std. Liquid Crystal Display Module	2	40.0	80.0	42.0	84.0
		0	0.0	0.0	0.0	0.0
SLC Cards (Maximum 10 SLC Loops)						
3-SSDC1	Signature Single Driver Controller (LRM)		144.0	0.0	204.0	0.0
			0.0	0.0	0.0	0.0
DACT						
3-MODCOM	Modem Communicator and Dialer	1	60.0	60.0	95.0	95.0
Distributed Audio						
		0	0.0	0.0	0.0	0.0
		0	0.0	0.0	0.0	0.0
			0.0	0.0	0.0	0.0
			0.0	0.0	0.0	0.0
Panel LEDs and Switches						
			0.0	0.0	0.0	0.0
			0.0	0.0	0.0	0.0
			0.0	0.0	0.0	0.0
Misc. Boards						
			0.0	0.0	0.0	0.0
			0.0	0.0	0.0	0.0
			0.0	0.0	0.0	0.0
Copper EST3 Networking						
3-RS485B	RS485 Network Card, Copper Class B Audio	1	98.0	98.0	98.0	98.0
Fiber EST3 Network						
		0	0.0	0.0	0.0	0.0
			0.0	0.0	0.0	0.0
			0.0	0.0	0.0	0.0
Fireworks Ethernet Network						
		0	0.0	0.0	0.0	0.0
		0	0.0	0.0	0.0	0.0
		0	0.0	0.0	0.0	0.0
		0	0.0	0.0	0.0	0.0
		0	0.0	0.0	0.0	0.0
External Devices	Auxiliary Load (From Page 2)			0.0		0.0
Remote Annunciator	Auxiliary Load (From Page 2)			184.0		186.0
Graphic Annunciator	Auxiliary Load (From Page 2)			0.0		0.0
Subtotal EST3 Panel Load				**712.0**		**773.0**

of 7 Amp Internal Power Supplies: **1** (Standby plus Alarm Current

3-PPS/M	Primary Power Supply/Charger	1	(Included w/ 3-CPU3 Current)			
3-BPS/M	Booster Power Supply	0	50.0	0.0	50.0	0.0
3-BBC/M	Booster Power Supply/Charger	0	70.0	0.0	70.0	0.0
	Standby / Alarm Load from above			712.0		773.0
Subtotal EST3 Panel Load				**712.0**		**773.0**

POWER SUPPLY REQUIRED

It = Is + Ia = 1.49 Amps of Power Required
7.00 Amps of Power Provided

BATTERYS REQUIRED

Ah = (Stdby Time x I supv) + (Alarm Time x I total) = 17.21 Ah Batteries Required
Safety Factor = 1.2 20.65 Ah Batteries Required w/ Safety Factor
26.0 Ah Batteries Provided

EST Life Safety Communications — Edwards

(2) 12V 26Ah BATTERIES MINIMUM REQUIRED

BATTERY CALCULATIONS
NTS (2)

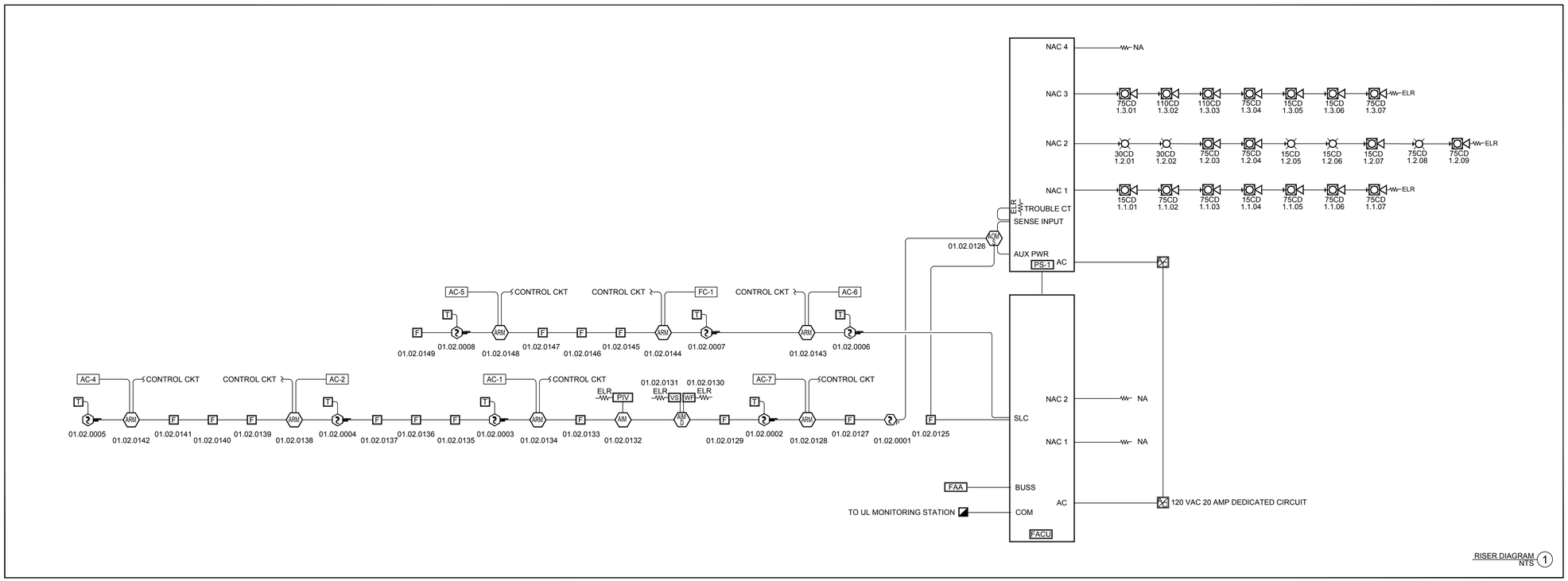

RISER DIAGRAM
NTS (1)

OWNER:

Solano Community College Dist
2000 North Village Parkway
Vacaville, CA 95688

ARCHITECT:

CA ARCHITECTS
475 Gate Five Road, Suite 107
Sausalito, CA 94965
T 415.331.7655
F 415.331.7656

PROJECT:

Vacaville Classroom Building (Annex) Renovation Project

CONSULTANT TEAM:

STAMP

LICENSED ARCHITECT
JOSHUA COHN
C 23410
REN. 11-30-17
STATE OF CALIFORNIA

SHEET LEGEND:

ISSUE/REVISION:

NO:	DATE:	DESCRIPTION:
	04/25/2017	ISSUE FOR DD 100%
	06/06/2017	ISSUE FOR CD 50%
	06/30/2017	ISSUE FOR CD 60%
	07/20/2017	ISSUE FOR CD 100%
	10/02/2017	ISSUE FOR CD 100%

KEY PLAN:

FILE: 48-C1
IDENTIFICATION STAMP
DIVISION OF THE STATE ARCHITECT
02-116082
AC JCC FLS GBC ss PVL
DATE: 10/31/2017

SCALE:
DATE:
PROJECT NO:
PERMIT APPLICATION NO.:

CALCULATIONS AND RISER DIAGRAM

FA4.00

FIRE STOP DETAILS

SYSTEM No. W-L-1082

F RATING - 2 Hr
T RATING - 0 Hr

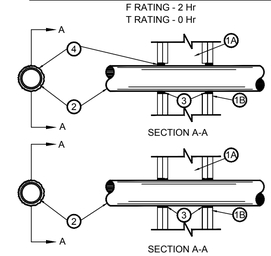

1. WALL ASSEMBLY - THE FIRE RATED GYPSUM WALL BOARD/STUD WALL ASSEMBLY SHALL BE CONSTRUCTED OF MATERIALS AND IN THE MANNER SPECIFIED IN THE INDIVIDUAL U300 OR U4000 SERIES WALL AND PARTITION DESIGNS IN THE URL FIRE RESISTANCE DIRECTORY AND SHALL INCLUDE THE FOLLOWING CONSTRUCTION FEATURES:

A. STUDS - WALL FRAMING MAY CONSIST OF EITHER WOOD STUDS OR STEEL CHANNELS STUDS. WOOD STUDS TO CONSIST OF NUM 2 BY 4 INCHES LUMBER SPACED 16 INCHES O.C. STEEL STUDS TO BE MIN 3-1/2 INCHES WIDE AND SPACES MAX 24 INCHES O.C.

B. WALL BOARD GYPSUM - TWO LAYERS OF NOM 5/8 INCH THICK GYPSUM WALL BOARD, AS SPECIFIED IN THE INDIVIDUAL WALL AND PARTITION DESIGN DIAMETER OF OPENING IS 1-1/2 INCHES LARGER THAN THE OUTSIDE DIAMETER OF PIPE.

2. THROUGH-PENETRANT - ONE METALLIC PIPE, CONDUIT OR TUBING TO BE CENTERED WITHIN THE FIRESTOP SYSTEM. AN ANNULAR SPACE OF 3/4 INCH IS RE□UIRED WITHIN THE FIRESTOP SYSTEM. PIPE, CONDUIT OR TUBING TO BE RIGIDLY SUPPORTED ON BOTH SIDES OF WALL ASSEMBLY. THE FOLLOWING TYPES AND SIZES OF METALLIC PIPES, CONDUITS OR TUBING MAY BE USED:

A. STEEL PIPE - NOM 12 INCHES DIAMETER (OR SMALLER) SCHEDULE 10 (OR HEAVIER) STEEL PIPE.
B. CONDUIT - NOM 6 INCHES DIAMETER (OR SMALLER) STEEL CONDUIT.
C. CONDUIT - NOM 4 INCHES DIAMETER (OR SMALLER) STEEL ELECTRIC METALLIC TUBING.
D. COPPER TUBING - NOM 6 INCHES DIAMETER (OR SMALLER) TYPE L (OR HEAVIER) COPPER TUBING.
E. COPPER PIPE - NOM 6 INCHES DIAMETER (OR SMALLER) REGULAR (OR HEAVIER) COPPER PIPE.

3. FORMING MATERIAL - NOM 1 INCH DIAMETER POLYETHYLENE BACKER ROD FRICTION FITTED INTO OPENING AS A PERMANENT FORM. FORMING MATERIAL TO BE RECESSED FROM BOTH SURFACES OF WALL AS RE□UIRED TO ACCOMMODATE THE RE□UIRED THICKNESS OF FILL MATERIAL.

4. FILL, VOID OR CAVITY MATERIAL - SEALANT - MINIMUM 5/8 INCH THICKNESS OF FILL MATERIAL APPLIED WITHIN ANNULUS, FLUSH WITH BOTH SURFACES OF WALL ASSEMBLY.

MINNESOTA MINING & MANUFACTURING CORPORATION - FB-2000□
*BEARING THE URL CLASSIFICATION MARKING

WALL PENETRATION DETAIL 1

SYSTEM No. W-L-1084

F RATING - 1 Hr
T RATING - 0 Hr

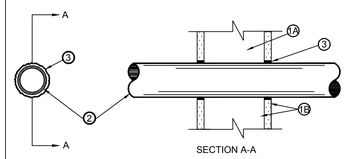

1. WALL ASSEMBLY - THE FIRE RATED GYPSUM WALL BOARD/STUD WALL ASSEMBLY SHALL BE CONSTRUCTED OF MATERIALS AND IN THE MANNER SPECIFIED IN THE INDIVIDUAL U300 OR U4000 SERIES WALL AND PARTITION DESIGNS IN THE URL FIRE RESISTANCE DIRECTORY AND SHALL INCLUDE THE FOLLOWING CONSTRUCTION FEATURES:

A. STUDS - WALL FRAMING MAY CONSIST OF EITHER WOOD STUDS OR STEEL CHANNELS STUDS. WOOD STUDS TO CONSIST OF NUM 2 BY 4 INCHES LUMBER SPACED 16 INCHES O.C. STEEL STUDS TO BE MIN 3-5/8 INCHES WIDE AND SPACES MAX 24 INCHES O.C.

B. WALL BOARD GYPSUM - NOM 5/8 INCH THICK GYPSUM WALL BOARD, AS SPECIFIED IN THE INDIVIDUAL WALL AND PARTITION DESIGN DIAMETER OF OPENING IS 1-1/2 INCHES LARGER THAN THE OUTSIDE DIAMETER OF PIPE.

2. THROUGH-PENETRANT - ONE METALLIC PIPE, CONDUIT OR TUBING TO BE CENTERED WITHIN THE FIRESTOP SYSTEM. AN ANNULAR SPACE OF 3/4 INCH IS RE□UIRED WITHIN THE FIRESTOP SYSTEM. PIPE, CONDUIT OR TUBING TO BE RIGIDLY SUPPORTED ON BOTH SIDES OF WALL ASSEMBLY. THE FOLLOWING TYPES AND SIZES OF METALLIC PIPES, CONDUITS OR TUBING MAY BE USED:

A. STEEL PIPE - NOM 12 INCHES DIAMETER (OR SMALLER) SCHEDULE 10 (OR HEAVIER) STEEL PIPE.

B. CONDUIT - NOM 6 INCHES DIAMETER (OR SMALLER) ELECTRIC METALLIC TUBING OR STEEL CONDUIT.

C. COPPER TUBING - NOM 6 INCHES DIAMETER (OR SMALLER) TYPE L (OR HEAVIER) COPPER TUBING.

D. COPPER PIPE - NOM 6 INCHES DIAMETER (OR SMALLER) REGULAR (OR HEAVIER) COPPER PIPE.

3. FILL, VOID OR CAVITY MATERIAL - SEALANT - MINIMUM 5/8 INCH THICKNESS OF FILL MATERIAL APPLIED WITHIN ANNULUS, FLUSH WITH BOTH SURFACES OF WALL ASSEMBLY.

MINNESOTA MINING & MANUFACTURING CORPORATION - FB-2000□

*BEARING THE URL CLASSIFICATION MARKING

WALL PENETRATION DETAIL 2

FIRE STOP DETAILS
NTS 1

OWNER:

Solano Community College Dist
2000 North Village Parkway
Vacaville, CA 95688

ARCHITECT:

CA ARCHITECTS
475 Gate Five Road, Suite 107
Sausalito, CA 94965
T 415.331.7655
F 415.331.7656

PROJECT:

Vacaville Classroom Building
(Annex) Renovation Project

CONSULTANT TEAM:

STAMP

LICENSED ARCHITECT
JOSHUA COHN
C 23410
REN. 11-30-17
STATE OF CALIFORNIA

SHEET LEGEND:

ISSUE/REVISION:

NO:	DATE:	DESCRIPTION:
	04/25/2017	ISSUE FOR DD 100%
	06/06/2017	ISSUE FOR CD 50%
	06/30/2017	ISSUE FOR CD 60%
	07/20/2017	ISSUE FOR CD 100%
	10/02/2017	ISSUE FOR CD 100%

KEY PLAN:

FILE: 48-C1
IDENTIFICATION STAMP
DIVISION OF THE STATE ARCHITECT
02-116082
AC JCC FLS GBC SS PVL
DATE: 10/31/2017

SCALE:
DATE:
PROJECT NO:
PERMIT APPLICATION NO.:

FIRE STOP DETAILS

FA5.00

GENERAL NOTES

1. UPRIGHT SPRINKLERS ARE LOCATED 1 FOOT BELOW CEILINGS, AT AN ELEVATION OF 17 FEET.
2. RETURN BENDS HAVE BEEN PROVIDED FOR ALL PENDENT SPRINKLERS.
3. NEW END OF LINE RESTRAINTS SHALL BE PROVIDED ON ALL END OF LINE PENDENT SPRINKLERS.
4. DROPS TO PENDENT SPRINKLERS ARE APPROXIMATELY 7 FEET.
5. SEISMIC BRACING HAS BEEN PROVIDED ON THE 2 ½ MAIN AND HAVE BEEN OBSERVED TO BE INSTALLED SATISFACTORILY.
6. NEW AIR RELEASE VENTS SHALL BE PROVIDED ON ALL MAINS, AS REQUIRED BY THE 2016 OF NFPA 13.
7. A NEW PRESSURE RELIEF VALVE SHALL BE PROVIDE, AS REQUIRED BY SECTION 7.1.2.1 OF NFPA 13, 2016 EDITION. 5
8. ALL EXTERIOR SPRINKLERS HAVE BEEN OBSERVED TO BE RUSTING AND DIRTY. EXTERIOR SPRINKLERS SHALL BE REPLACED WITH NEW SPRINKLER SPRINKLERS THAT ARE MORE EQUIPT TO ENDURE EXTERIOR CONDITIONS.
9. THE BUILDING'S MAIN DRAIN HAS BEEN OBSERVED TO DRAIN TO AN EXTERIOR COVERED PATIO. PER CALIFORNIA REQUIREMENTS, THIS DRAIN SHALL BE RENOVATED TO DRAIN DIRECTLY TO A LANDSCAPED AREA, OR MEANS SHALL BE PROVIDED TO ALLOW CAPABILITY OF THE SYSTEM TO DRAIN TO A LANDSCAPED AREA. DRAINAGE TO A LANDSCAPED AREA MAY OCCUR THROUGH MEANS OF CONNECTING A THREADED FITTING TO THE DRAIN OUTLET, AND A HOSE THAT IS PROVIDED IN THE FIRE SPRINKLER RISER ROOM.
10. CLASSROOMS, OFFICES, RESTROOMS AND SIMILAR AREAS ARE CLASSIFIED AS LIGHT HAZARD AND SHALL BE HYDRAULICALLY DESIGNED, WET-PIPE SYSTEM PROVIDING A MINIMUM DENSITY OF 0.10 GPM OVER THE REMOTE 900 SQUARE FEET (REDUCED FROM 1,500 SQUARE FEET WITH THE USE OF QUICK RESPONSE SPRINKLERS) WITH A COMBINED INSIDE/OUTSIDE HOSE STREAM ALLOWANCE OF 100 GPM.
11. MECHANICAL AREAS ARE CLASSIFIED AS ORDINARY GROUP 1 HAZARD IN ACCORDANCE WITH NFPA 13 AND SHALL BE A HYDRAULICALLY DESIGNED, WET-PIPE SYSTEM PROVIDING A MINIMUM DENSITY OF 0.15 GPM OVER THE REMOTE 1,500 SQUARE FEET WITH A COMBINED INSIDE/OUTSIDE HOSE STREAM ALLOWANCE OF 250 GPM.
12. WATER SUPPLY INFORMATION FROM THE VACAVILLE FIRE DEPARTMENT WAS RECEIVED 10/19/16 AT THE FIRE HYDRANTS LOCATED OUTSIDE THE BUILDING; 91 PSI STATIC PRESSURE, 74 PSI RESIDUAL PRESSURE FLOWING 4,500 GPM CONSISTENT WITH THE NEW WATERFLOW INFORMATION. BASED ON THIS WATER SUPPLY INFORMATION, THE AVAILABLE WATER IS CLEARLY FAR IN EXCESS OF THE REQUIRED DEMAND FROM THE FIRE SPRINKLERS, HOSE STREAM REQUIREMENTS, AND FIREFLOW REQUIREMENTS.
13. SEE FP0.01 FOR UNDERGROUND INFORMATION, BACKFLOW PREVENTER, AND FIRE DEPARTMENT CONNECTIONS.
14. ARCHITECT OF RECORD, MECHANICAL ENGINEER & FIRE PROTECTION CONTRACTOR (C-16) SHALL AFFIX THEIR SEAL, STAMP AND SIGN ALL SUBMITTALS, OR PROVIDE DOCUMENTATION PER DSA IR A-018.
15. PROVIDE A NEW SPARE SPRINKLER CABINET, SPRINKLER WRENCH, AND NO FEWER THAN 6 SPARE SPRINKLERS MATCHING THE TYPES AND TEMPERATURE RATING IN EACH PROTECTED AREA FOR SYSTEMS LESS THAN 300 SPRINKLERS (12 SPARE SPRINKLERS FOR SYSTEMS 300 TO 1,000 SPRINKLERS) IN AN APPROVED LOCATION BY OWNER.
16. THE SPRINKLER FLOW SWITCH SHALL BE TESTED TO CONFIRM THAT WHEN THE INSPECTOR'S TEST VALVE IS ACTIVATED AN ALARM WILL SOUND NO MORE THAN 90 SECONDS AFTER INITIAL FLOW (WITNESSED BY THE PROJECT INSPECTOR).
17. SIGNAGE HAS BEEN BE PROVIDED AS REQUIRED, INCLUDING "RISER ROOM IDENTIFICATION".
18. A PERMANENT HYDRAULIC CALCULATIONS DESIGN DATA PLACARD SHALL BE ATTACHED TO THE RISER.
19. EXISTING FIRE ALARM SYSTEM INTERCONNECTION TO THE WATERFLOW VALVE & TAMPER VALVES SHALL REMAIN. 5
20. SPRINKLER CONTRACTOR SHALL COMPLETE AND SIGN CONTRACTOR'S MATERIAL & TEST CERTIFICATE FOR ABOVE GROUND PIPING. THIS FORM SHALL BE GIVEN TO THE PROJECT INSPECTOR WHO WILL FORWARD TO DSA FOR FILING IN PROJECT RECORDS.
21. CONTRACTOR SHALL VISIT THE SITE TO DETERMINE EXISTING CONDITIONS. CONTRACTOR IS RESPONSIBLE FOR FIELD COORDINATION AND ROUTING/MODIFICATION TO AVOID OBSTRUCTION WITH OTHER TRADES AS REQUIRED TO INSTALL A COMPLETE OPERATIONAL SPRINKLER SYSTEM IN ACCORDANCE WITH NFPA 13 (2016 EDITION), DSA, CITY OF VACAVILLE FIRE DEPARTMENT AND THE SPECIFICATIONS, WHETHER REPRESENTED ON THESE PLANS OR NOT AT NO ADDITIONAL COST TO OWNER.
22. CONTRACTOR SHALL VERIFY AS-BUILT CONDITIONS ON SITE, AND NOTIFY OWNER OF ANY DEFICIENCIES, PRIOR TO FABRICATION AND/OR INSTALLATION.
23. THE SPRINKLER SYSTEM INSTALLATION AND MODIFICATION SHALL BE COORDINATED WITH THE WORK OF OTHER TRADES. THE GENERAL CONTRACTOR'S SUBMITTED SCHEDULE SHALL BE FOLLOWED.
24. REMOVAL AND REPLACEMENT OF EXISTING CEILINGS, WHEREVER NECESSARY FOR INSTALLATION AND OR MODIFICATION OF THE SPRINKLER SYSTEM, SHALL BE THE RESPONSIBILITY OF THE CONTRACTOR. CEILINGS AFFECTED DURING INSTALLATION OR MODIFICATION OF THE SPRINKLER SYSTEM SHALL BE REFINISHED WITH NEW AT NO COST TO THE OWNER.
25. DELIVERY OF ALL MATERIALS AND EQUIPMENT TO THE JOB SITE SHALL BE SCHEDULED TO ASSURE COMPLIANCE WITH THE PREDETERMINED CONSTRUCTION SCHEDULE. THE CONTRACTOR SHALL BE RESPONSIBLE FOR STORAGE AND HANDLING OF ALL MATERIALS AND EQUIPMENT ON THE JOB SITE, INCLUDING FURNISHING OF ANY STORAGE FACILITIES OR STRUCTURE REQUIRED.
26. THE CONTRACTOR IS RESPONSIBLE FOR ALL CUTTING, SEALING, PATCHING, AND PAINTING REQUIRED FOR INSTALLATION AND OR MODIFICATION OF THE SPRINKLER SYSTEM. ALL PENETRATIONS SHALL BE SEALED WITH NONCOMBUSTIBLE MATERIAL. FOR THOSE PENETRATIONS THAT ARE THROUGH FIRE-RATED WALLS, FLOORS OR CEILINGS, SEAL
27. CHANGES TO THE APPROVAL SET OF DRAWINGS SHALL BE SUBMITTED TO THE ENGINEER AND DSA FOR APPROVAL. ADDING OR DELETING SPRINKLERS, MODIFYING PIPE SIZES, AND SIGNIFICANT CHANGES TO PIPE ROUTING SHALL BE SUBMITTED FOR APPROVAL. MINOR DEVIATIONS IN THE LOCATION OF SPRINKLERS AND PIPE ROUTING NEED NOT BE SUBMITTED FOR APPROVAL BUT SHALL BE RECORDED AND INCORPORATED INTO THE AS-BUILT DRAWINGS.
28. UPON ACCEPTANCE TESTING OF THE FIRE SPRINKLER SYSTEM, CONTRACTOR SHALL VERIFY A U.L. LISTED CENTRAL STATION IS MONITORING THE SYSTEM.

PROTECTION AREA

EXISTING BUILDING:	16,441 SQUARE FEET
COVERED WALKWAYS:	5,088 SQUARE FEET

INDEX OF DRAWINGS

FP1.0 COVER SHEET, WATERFLOW DATA & SEISMIC BRACING CALCULATIONS
FP1.1 SITE PLAN, RISER & BACKFLOW PREVENTER DETAILS
FP2.0 FIRE PROTECTION SYSTEM FLOOR PLAN
FP3.0 DETAILS SHEET

PROJECT DESCRIPTION

THE FIRE SPRINKLER SYSTEM LOCATED IN THIS FACILITY HAS BEEN FIELD INVESTIGATED AND HAS BEEN OBSERVED TO BE IN COMPLIANT WITH THE 1996 EDITION OF NFPA 13, WHICH IS THE STANDARD TO WHICH THE SYSTEM WAS DESIGNED. HOWEVER, THERE ARE RENOVATIONS THAT ARE REQUIRED IN ORDER TO MEET THE 2016 EDITION OF NFPA 13. REQUIRED RENOVATIONS ARE AS FOLLOWS:

1. ALL THE ARM-OVERS EXCEEDING 36 INCHES IN LENGTH ON THE FIRE SPRINKLER SYSTEM WILL BE PROVIDED END OF LINE RESTRAINTS. IN TOTAL, APPROXIMATELY 150 NEW END OF LINE RESTRAINTS ARE REQUIRED TO BE INSTALLED IN ORDER TO MEET THE 2016 EDITION OF NFPA 13.
2. AN AIR RELEASE VENT IS REQUIRED TO BE INSTALLED. DUE TO THE CONFIGURATION OF THIS FIRE SPRINKLER SYSTEM, WE RECOMMEND THAT ONE (1) AIR RELEASE VENT BE PROVIDED ON EACH LONG PORTION OF THE 2 1/2 INCH MAIN. A TOTAL OF TWO (2) AIR RELEASE VENTS WILL BE INSTALLED.
3. EXTERIOR FIRE SPRINKLERS ALONG THE COVERED HALLWAYS WERE OBSERVED TO BE RUSTY AND REQUIRE REPLACEMENT. THERE ARE A TOTAL OF 43 EXTERIOR SPRINKLERS THAT WILL REQUIRE REPLACEMENT.
4. THE FIRE SPRINKLER DRAIN AND INSPECTORS TEST VALVE OBSERVED TO DISCHARGE TO THE COVERED WALKWAYS. THE DRAIN AND INSPECTORS TEST VALVE SHALL BE RENOVATED TO DISCHARGE TO A LANDSCAPED AREA OR A HOSE CONNECTION SHALL BE PROVIDED ON THE SYSTEM SO THAT DRAINAGE CAN BE EXTENDED TO A LANDSCAPED AREA. FOR MORE INFORMATION, REFER TO GENERAL NOTES.
5. A NEW PRESSURE RELIEF VALVE SHALL BE PROVIDE, AS REQUIRED BY SECTION 7.1.2.1 OF NFPA 13, 2016 EDITION. 5

LEGEND

●	PENDENT SPRINKLER
○	UPRIGHT SPRINKLER
1"	SPRINKLER PIPING (SIZE INDICATED)
	2-WAY SEISMIC BRACE
	HANGER
	END OF BRANCH LINE RESTRAINT
⊗	SPRINKLER RISER
	HYDRAULIC REFERENCE NODE NUMBER
	REMOTE AREA OF APPLICATION
	WATERFLOW SWITCH
	BUTTERFLY VALVE WITH TAMPER SWITCH
N	CHECK VALVE
RN	RISER NIPPLE
	PIPE TEE

WATERFLOW TEST DATA

Utilities Department
650 Merchant Street
Vacaville, CA 95688
707-469-6400
707-469-6480

Date: October 19, 2016

To: Foulk Civil Engineering, Inc.
4777 Mangels Blvd.
Fairfield, CA 94534

From: Miguel Medina

Subject: Water distribution system pressures and flows in the 12-inch water main near Orange Tree Circle

Project Name & Location: 80 Orange Tree Circle (APN 0134-343-020)

Contact: Brad Foulk

Telephone: (707) 864-0784, Fax (707) 864-0793

We estimate the water distribution system conditions for the looped 12-inch water main near 80 Orange Tree Circle as follows:

System Static Pressure:

91 pounds per square inch (PSI)

Fireflow & Residual Pressure:

4,500 gallons per minute (GPM) @ 74 PSI residual.

Comments:

Please note that this information is calculated using the City of Vacaville's water distribution system computer model for the pipe network node at the intersection noted. You will need to estimate the losses through the service lateral, any backflow devices or appurtenances, on-site piping and elevation gain. This would be included in your engineer's calculations to the Fire Department.

Faxed ☐ or E-Mailed ☒

Pc:

File # 205-13

G:\Engineering\Reports, Plans, and Studies\Fire Flows\80 Orange Tree Circle 101916.doc L16-211

PROJECT SITE

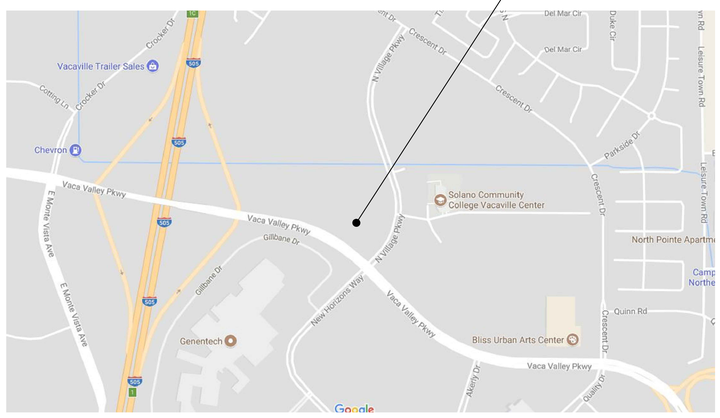

VICINITY MAP

SCALE: NTS

OWNER:

Solano Community College District
2000 North Village Parkway
Vacaville, CA 95688

ARCHITECT:

CA ARCHITECTS
475 Gate Five Road, Suite 107
Sausalito, CA 94965
T 415.331.7655
F 415.331.7656

PROJECT:

Vacaville Classroom Building (Annex) Renovation Project

CONSULTANT TEAM:

ZARI CONSULTING GROUP
FIRE PROTECTION ENGINEERS
755 BAYWOOD DRIVE
PETALUMA, CA 94954
(888) 779-3397

STAMP

FILE: 48-C1
IDENTIFICATION STAMP
DIVISION OF THE STATE ARCHITECT
02-116082
AC TCC FLS GBC SS PVL
DATE: 10/31/2017

ISSUE/REVISION:

NO:	DATE:	DESCRIPTION:
	04/25/2017	ISSUE FOR DD 100%
	06/06/2017	ISSUE FOR CD 50%
	06/30/2017	ISSUE FOR CD 60%
	07/20/2017	ISSUE FOR CD 100%
	10/04/2017	REVIEW COMMENTS

SHEET TITLE:

FIRE PROTECTION SYSTEM COVER SHEET

LICENSED PROFESSIONAL ENGINEER
JOSEPH P. ZARI
FP 1726
EXP. 6-30-18
FIRE PROTECTION
STATE OF CALIFORNIA

SCALE:	N/A
DATE:	18-JULY-17
PROJECT NO:	
PERMIT APPLICATION NO.:	

SHEET NUMBER:

FP1-0

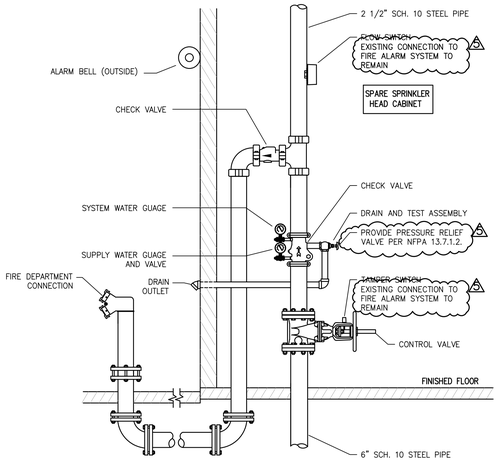

1 FP1-1 AUTOMATIC SPRINKLER RISER & FDC DETAIL
NOT TO SCALE

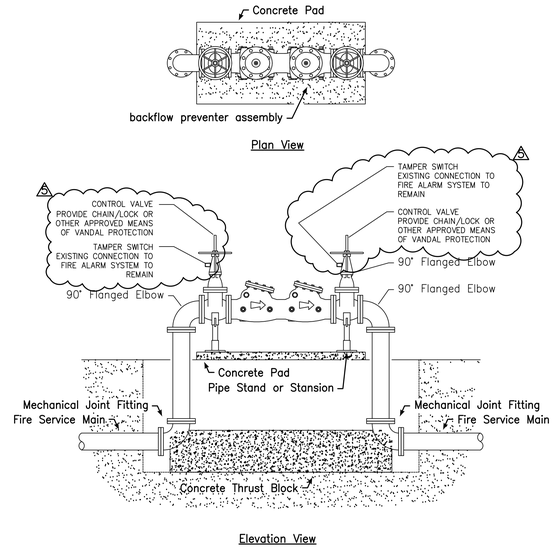

2 FP1-1 BACKFLOW PREVENTER ASSEMBLY DETAIL
NOT TO SCALE

3 FP1-1 BACKFLOW PREVENTER PICTURE
NOT TO SCALE

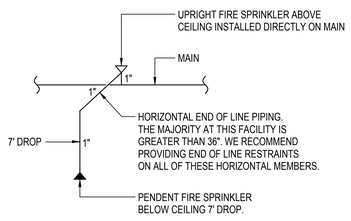

4 FP1-1 TYPICAL RETURN BENDS DETAIL
NOT TO SCALE

5 FP1-1 FIRE DEPARTMENT CONNECTION (FDC)
NOT TO SCALE

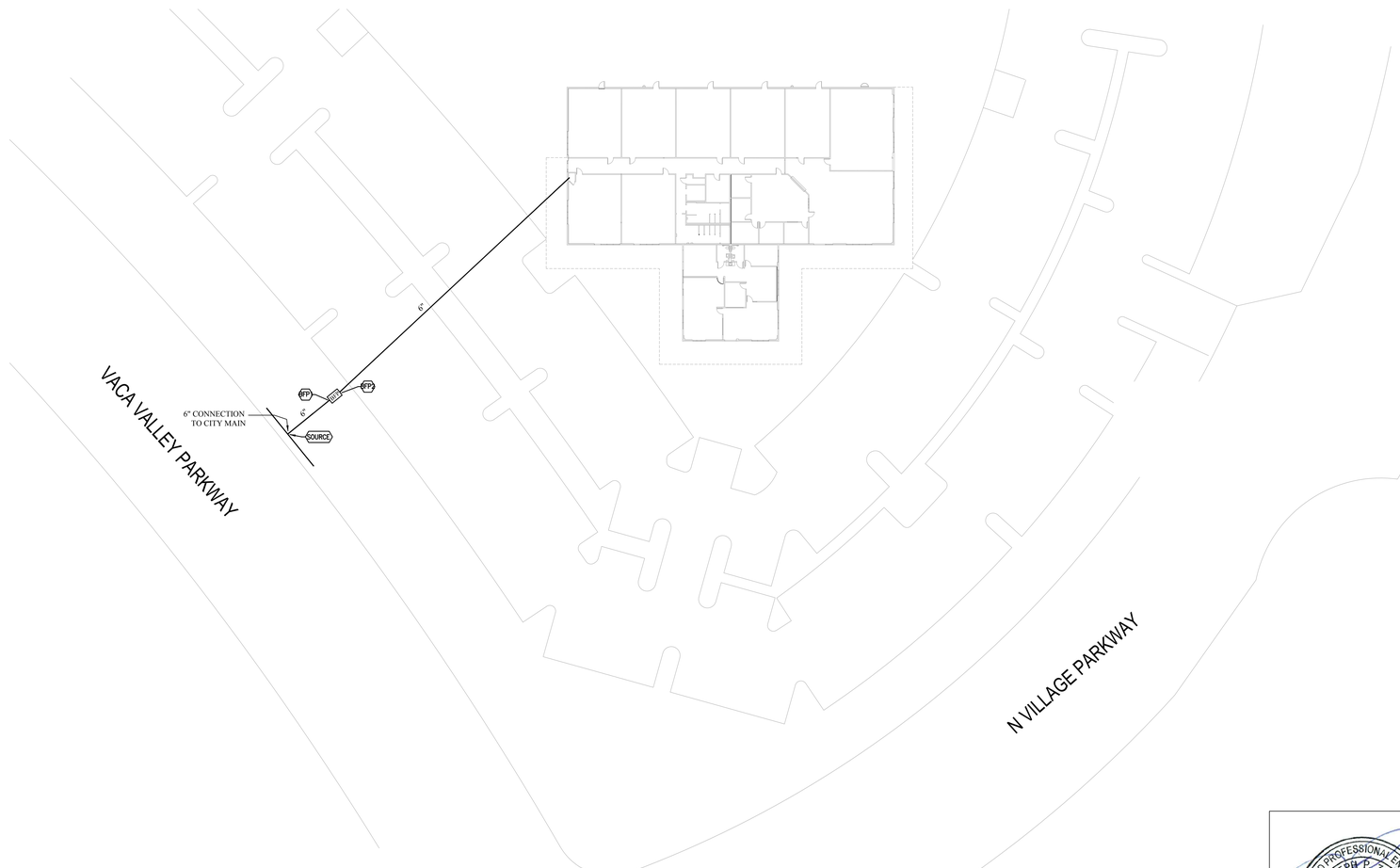

4 FP1-1 FIRE PROTECTION SYSTEM SITE PLAN
SCALE: 1"= 30'-0"

OWNER:

Solano Community College District
2000 North Village Parkway
Vacaville, CA 95688

ARCHITECT:

CA ARCHITECTS
475 Gate Five Road, Suite 107
Sausalito, CA 94965
T 415.331.7655
F 415.331.7656

PROJECT:

Vacaville Classroom Building (Annex) Renovation Project

CONSULTANT TEAM:

ZARI CONSULTING GROUP
FIRE PROTECTION ENGINEERS
755 BAYWOOD DRIVE
PETALUMA, CA 94954
(888) 779-3397

SHEET LEGEND:

STAMP

FILE: 48-C1
IDENTIFICATION STAMP
DIVISION OF THE STATE ARCHITECT
02-116082
AC TCC FLS GBC SS PVL
DATE: 10/31/2017

ISSUE/REVISION:

NO:	DATE:	DESCRIPTION:
	04/25/2017	ISSUE FOR DD 100%
	06/06/2017	ISSUE FOR CD 50%
	06/30/2017	ISSUE FOR CD 60%
	07/20/2017	ISSUE FOR CD 100%
	10/04/2017	REVIEW COMMENTS

SHEET TITLE:

FIRE PROTECTION SYSTEM SITE PLAN & DETEAILS

SCALE:	AS NOTED
DATE:	18-JULY-17
PROJECT NO:	
PERMIT APPLICATION NO.:	

SHEET NUMBER:

FP1-1

LICENSED PROFESSIONAL ENGINEER
JOSEPH P. ZARI
FP 1726
EXP. 06-30-18
FIRE PROTECTION
STATE OF CALIFORNIA

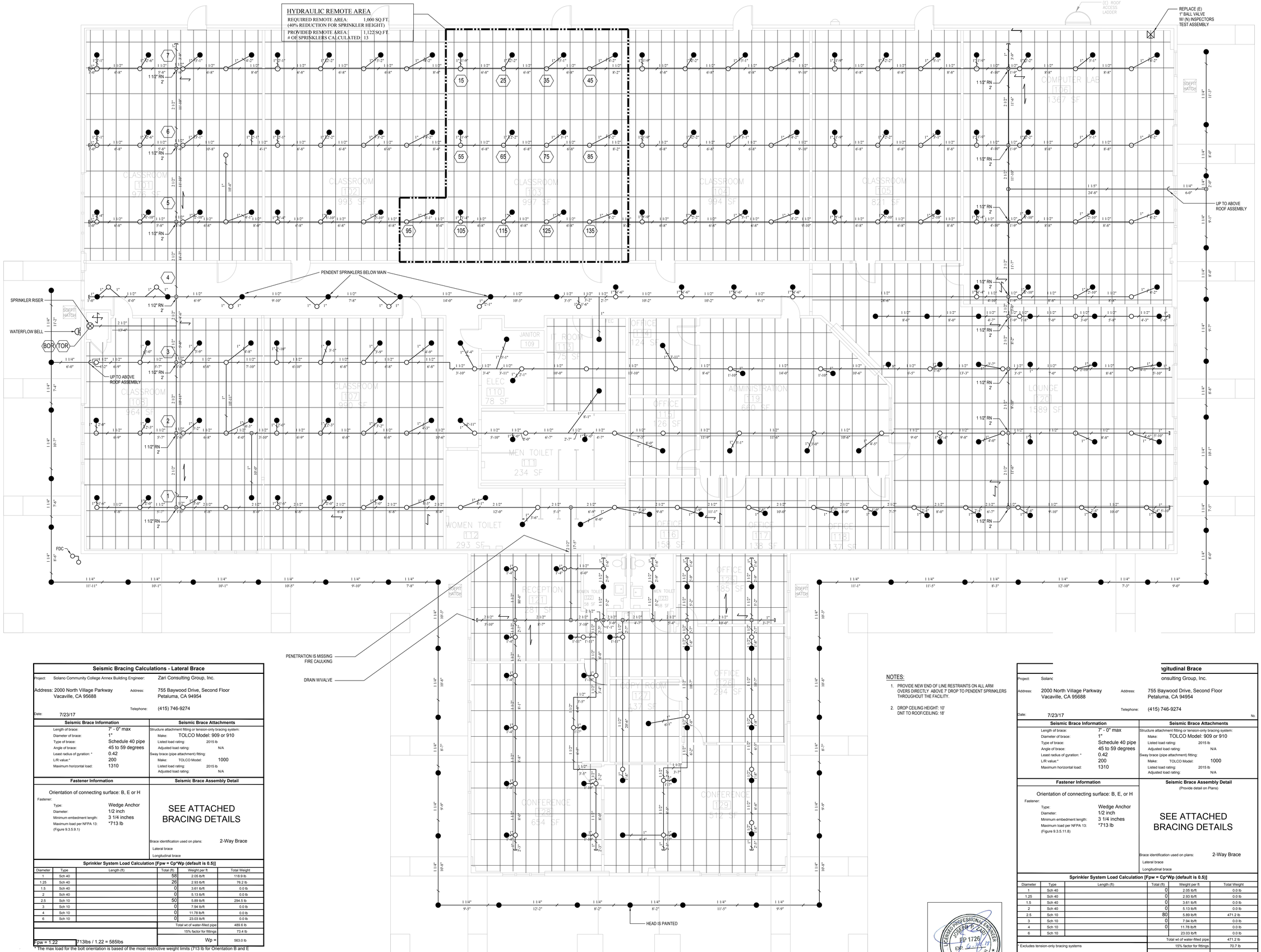

1 FP2-0 FIRE PROTECTION SYSTEM FLOOR PLAN
SCALE: 3/16" = 1'-0"

Seismic Bracing Calculations - Lateral Brace

Project: Solano Community College Annex Building Engineer: Zari Consulting Group, Inc.

Address: 2000 North Village Parkway, Vacaville, CA 95688 — Address: 755 Baywood Drive, Second Floor, Petaluma, CA 94954

Telephone: (415) 746-9274

Date: 7/23/17

Seismic Brace Information

Length of brace:	7' - 0" max
Diameter of brace:	1"
Type of brace:	Schedule 40 pipe
Angle of brace:	45 to 59 degrees
Least radius of gyration: *	0.42
L/R value:*	200
Maximum horizontal load:	1310

Seismic Brace Attachments

Structure attachment fitting or tension-only bracing system:
Make: TOLCO Model: 909 or 910
Listed load rating: 2015 lb
Adjusted load rating: N/A
Sway brace (pipe attachment) fitting:
Make: TOLCO Model: 1000
Listed load rating: 2015 lb
Adjusted load rating: N/A

Fastener Information

Orientation of connecting surface: B, E or H

Fastener:

Type:	Wedge Anchor
Diameter:	1/2 inch
Minimum embedment length:	3 1/4 inches
Maximum load per NFPA 13: (Figure 9.3.5.9.1)	*713 lb

Seismic Brace Assembly Detail

SEE ATTACHED BRACING DETAILS

Brace identification used on plans: 2-Way Brace
Lateral brace
Longitudinal brace

Sprinkler System Load Calculation [Fpw = Cp*Wp (default is 0.5)]

Diameter	Type	Length (ft)	Total (ft)	Weight per ft	Total Weight
1	Sch 40		58	2.05 lb/ft	118.9 lb
1.25	Sch 40		26	2.93 lb/ft	76.2 lb
1.5	Sch 40		0	3.61 lb/ft	0.0 lb
2	Sch 40		0	5.13 lb/ft	0.0 lb
2.5	Sch 10		50	5.89 lb/ft	294.5 lb
3	Sch 10		0	7.94 lb/ft	0.0 lb
4	Sch 10		0	11.78 lb/ft	0.0 lb
6	Sch 10		0	23.03 lb/ft	0.0 lb
			Total wt of water-filled pipe		489.6 lb
			15% factor for fittings		73.4 lb
Fpw = 1.22	713lbs / 1.22 = 585lbs		Wp =		563.0 lb

* The max load for the bolt orientation is based of the most restrictive weight limits (713 lb for Orientation B and E
Orientation H is acceptable for this sway brace spacing provided on the floor plan

NOTES:

1. PROVIDE NEW END OF LINE RESTRAINTS ON ALL ARM OVERS DIRECTLY ABOVE 7' DROP TO PENDENT SPRINKLERS THROUGHOUT THE FACILITY.
2. DROP CEILING HEIGHT: 10'
   DNT TO ROOF/CEILING: 18'

ngitudinal Brace

Project: Solanc — consulting Group, Inc.

Address: 2000 North Village Parkway, Vacaville, CA 95688 — Address: 755 Baywood Drive, Second Floor, Petaluma, CA 94954

Telephone: (415) 746-9274

Date: 7/23/17 — No.

Seismic Brace Information

Length of brace:	7' - 0" max
Diameter of brace:	1"
Type of brace:	Schedule 40 pipe
Angle of brace:	45 to 59 degrees
Least radius of gyration: *	0.42
L/R value:*	200
Maximum horizontal load:	1310

Seismic Brace Attachments

Structure attachment fitting or tension-only bracing system:
Make: TOLCO Model: 909 or 910
Listed load rating: 2015 lb
Adjusted load rating: N/A
Sway brace (pipe attachment) fitting:
Make: TOLCO Model: 1000
Listed load rating: 2015 lb
Adjusted load rating: N/A

Fastener Information

Orientation of connecting surface: B, E, or H

Fastener:

Type:	Wedge Anchor
Diameter:	1/2 inch
Minimum embedment length:	3 1/4 inches
Maximum load per NFPA 13: (Figure 9.3.5.11.8)	*713 lb

Seismic Brace Assembly Detail

(Provide detail on Plans)

SEE ATTACHED BRACING DETAILS

Brace identification used on plans: 2-Way Brace
Lateral brace
Longitudinal brace

Sprinkler System Load Calculation [Fpw = Cp*Wp (default is 0.5)]

Diameter	Type	Length (ft)	Total (ft)	Weight per ft	Total Weight
1	Sch 40		0	2.05 lb/ft	0.0 lb
1.25	Sch 40		0	2.93 lb/ft	0.0 lb
1.5	Sch 40		0	3.61 lb/ft	0.0 lb
2	Sch 40		0	5.13 lb/ft	0.0 lb
2.5	Sch 10		80	5.89 lb/ft	471.2 lb
3	Sch 10		0	7.94 lb/ft	0.0 lb
4	Sch 10		0	11.78 lb/ft	0.0 lb
6	Sch 10			23.03 lb/ft	0.0 lb
			Total wt of water-filled pipe		471.2 lb
* Excludes tension-only bracing systems			15% factor for fittings		70.7 lb
Fpw = 1.22	713lbs / 1.22 = 585lbs		Wp =		541.9 lb

* The max load for the bolt orientation is based of the most restrictive weight limits (713 lb for Orientation B and E)
Orientation H is acceptable for this sway brace spacing provided on the floor plans

OWNER:

Solano Community College District
2000 North Village Parkway
Vacaville, CA 95688

ARCHITECT:

CA ARCHITECTS
475 Gate Five Road, Suite 107
Sausalito, CA 94965
T 415.331.7655
F 415.331.7656

PROJECT:

Vacaville Classroom Building (Annex) Renovation Project

CONSULTANT TEAM:

ZARI CONSULTING GROUP
FIRE PROTECTION ENGINEERS
755 BAYWOOD DRIVE
PETALUMA, CA 94954
(888) 779-3397

SHEET LEGEND:

STAMP

FILE: 48-C1

IDENTIFICATION STAMP
DIVISION OF THE STATE ARCHITECT
02-116082
AC. ICC FLS GBC SSPVL
DATE: 10/31/2017

ISSUE/REVISION:

NO:	DATE:	DESCRIPTION:
	04/25/2017	ISSUE FOR DD 100%
	06/06/2017	ISSUE FOR CD 50%
	06/30/2017	ISSUE FOR CD 60%
	07/20/2017	ISSUE FOR CD 100%
	10/04/2017	REVIEW COMMENTS

SHEET TITLE:

FIRE PROTECTION SYSTEM FLOOR PLAN

SCALE: AS NOTED
DATE: 18-JULY-17
PROJECT NO:
PERMIT APPLICATION NO.:

SHEET NUMBER:

FP2-0

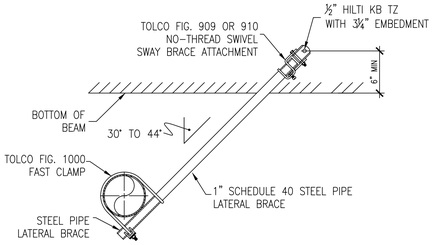

NOTE:
PROVIDE HANGER WITHIN 4" OF BRACE.
MAX LENGTH OF BRACE = 7'–0"

1 FP3–0 LATERAL EARTHQUAKE BRACING
NOT TO SCALE

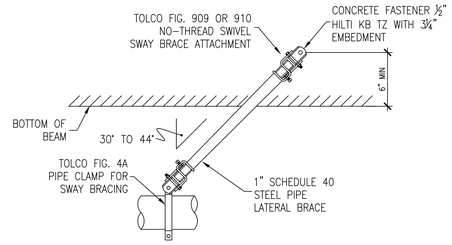

NOTE:
PROVIDE HANGER WITHIN 4" OF BRACE.
MAX LENGTH OF BRACE = 7'–0"

3 FP3–0 LONGITUDINAL EARTHQUAKE BRACING
NOT TO SCALE

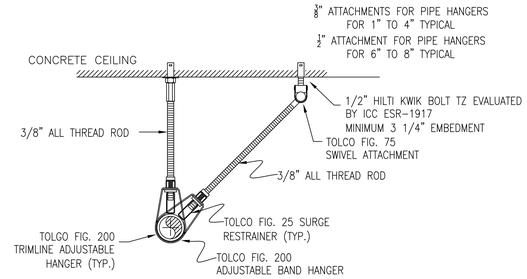

4 FP3–0 END OF BRANCH LINE RESTRAINT
NOT TO SCALE

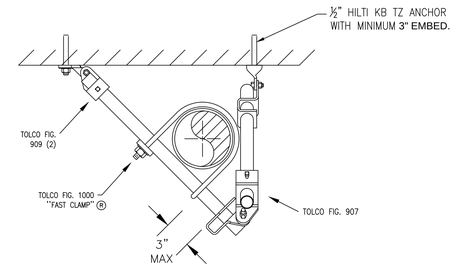

9 FP3–0 4 WAY LATERAL/LONGITUDINAL EARTHQUAKE BRACE
NOT TO SCALE

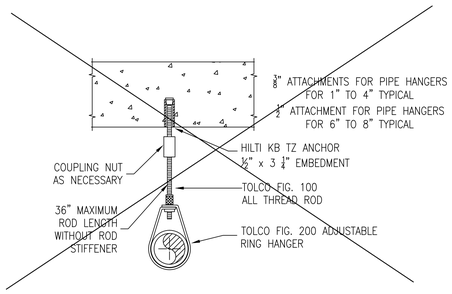

5 FP3–0 SELF DRILLING ANCHOR, ROD AND RING
NOT TO SCALE

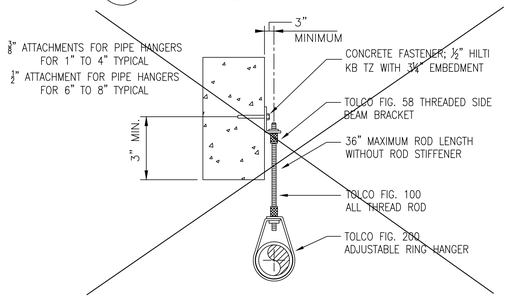

7 FP3–0 THREADED SIDE BEAM BRACKET, ROD & RING
NOT TO SCALE

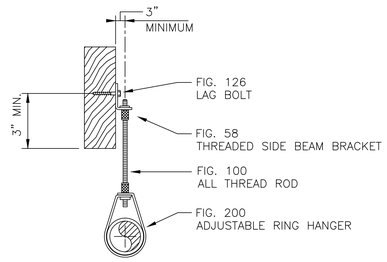

8 FP3–0 THREADED SIDE BEAM BRACKET, ROD & RING
NOT TO SCALE

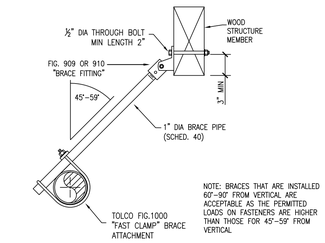

10 FP3–0 LATERAL EARTHQUAKE BRACING
NOT TO SCALE

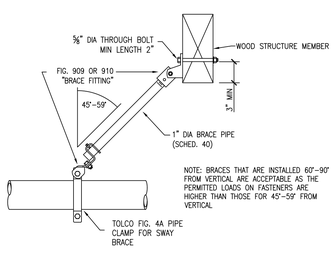

11 FP3–0 LONGITUDINAL EARTHQUAKE BRACING
NOT TO SCALE

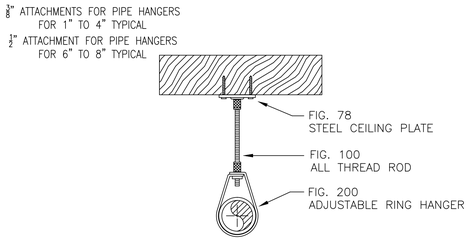

12 FP3–0 CEILING PLATE, ROD AND RING
NOT TO SCALE

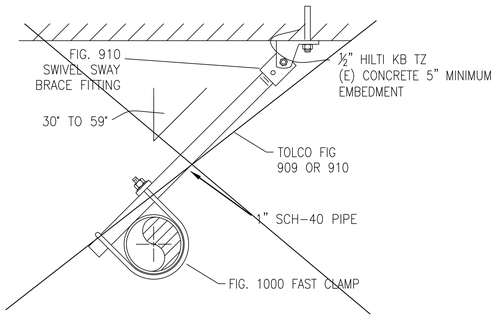

13 FP3–0 LATERAL EARTHQUAKE BRACE
NOT TO SCALE

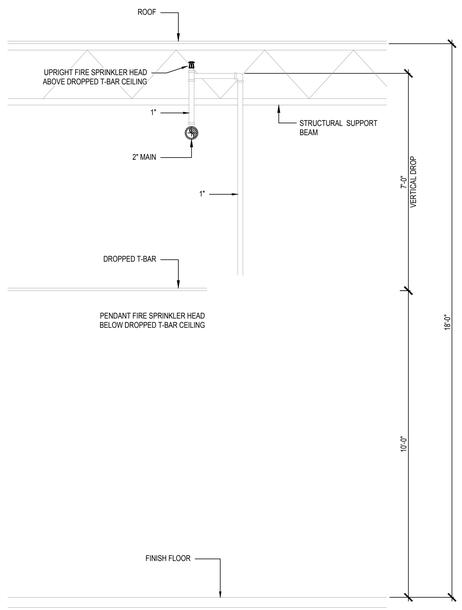

16 FP3–0 TYPICAL BUILDING SECTION
SCALE: 1/2" = 1'–0"

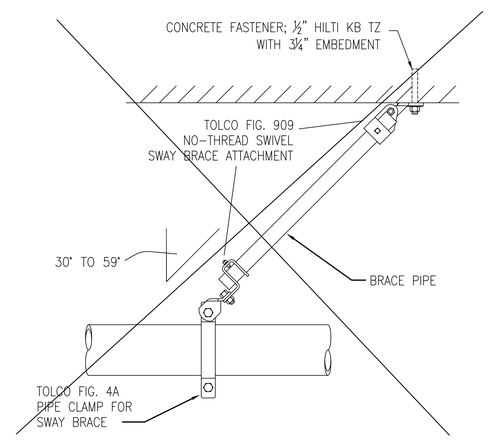

14 FP3–0 LONGITUDINAL EARTHQUAKE BRACE
NOT TO SCALE

SYSTEM NO. C–AJ–0059
F RATING – 2 AND 4 HR (SEE ITEMS 1 AND 2B)
T RATINGS – 1–1/2 AND 4 HR (SEE ITEM 2B)

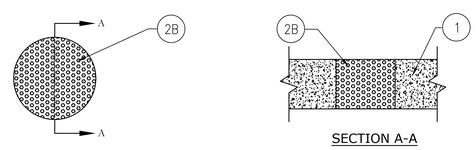

1. **FLOOR OR WALL ASSEMBLY** – REINFORCED LIGHTWEIGHT OR NORMAL WEIGHT (100 TO 150 PCF) CONCRETE. WALL MAY ALSO BE CONSTRUCTED OF ANY UL CLASSIFIED **CONCRETE BLOCKS** *. MIN. FLOOR OR WALL THICKNESS FOR 2–HR F RATING IS 2½ IN. MIN. FLOOR OR WALL THICKNESS FOR 4–HR RATING IS 4½ IN. MAX DIAM. OF OPENING IS 7 IN.

SEE **CONCRETE BLOCKS** CATEGORY IN THE FIRE RESISTANCE DIRECTORY FOR NAMES OF MANUFACTURERS.

2. **FIRESTOP SYSTEM** – THE FIRESTOP SYSTEM SHALL CONSIST OF THE FOLLOWING:

A. FORM – (NOT SHOWN) – FORM TO BE A RIGID SHEET MATERIAL SECURED AGAINST UNDERSIDE OF FLOOR OR BOTH SIDES OF WALL TO PREVENT LEAKAGE OF THE FILL MATERIAL (ITEM 2B) DURING INSTALLATION. FORM TO BE REMOVED AFTER FILL MATERIAL HAS HARDENED.

B. FILL, VOID OR CAVITY MATERIAL* - MORTAR- MATERIAL TO BE MIXED WITH WATER AT A RATE OF TWO PARTS OF DRY MIXTURE TO ONE PART OF WATER, BY VOLUME, IN ACCORDANCE WITH THE MIXING INSTRUCTIONS SUPPLIED WITH THE PRODUCT. MORTAR PUMPED OR TROWELED INTO THE THROUGH OPENING TO FILL THE OPENING THROUGHOUT THE ENTIRE THICKNESS OF THE FLOOR OR WALL. THE HOURLY F AND T RATING OF THE FIRESTOP SYSTEM ARE DEPENDENT UPON THE FILL MATERIAL THICKNESS, AS SHOWN IN THE FOLLOWING TABLE:

MIN. FILL MTL DEPTH, IN.	F RATING, HR	T RATING, HR
2½	2	1½
4½	4	4

15 FP3–0 DETAIL – FLOOR ASSEMBLY
NOT TO SCALE

OWNER:

Solano Community College District
2000 North Village Parkway
Vacaville, CA 95688

ARCHITECT:

CA ARCHITECTS
475 Gate Five Road, Suite 107
Sausalito, CA 94965
T 415.331.7655
F 415.331.7656

PROJECT:

Vacaville Classroom Building
(Annex) Renovation Project

CONSULTANT TEAM:

ZARI CONSULTING GROUP
FIRE PROTECTION ENGINEERS
755 BAYWOOD DRIVE
PETALUMA, CA 94954
(888) 779-3397

SHEET LEGEND:

STAMP

FILE: 48-C1
IDENTIFICATION STAMP
DIVISION OF THE STATE ARCHITECT
02-116082
AC TCC FLS GBC SS PVL
DATE: 10/31/2017

ISSUE/REVISION:

NO:	DATE:	DESCRIPTION:
	04/25/2017	ISSUE FOR DD 100%
	06/06/2017	ISSUE FOR CD 50%
	06/30/2017	ISSUE FOR CD 60%
	07/20/2017	ISSUE FOR CD 100%
	10/04/2017	REVIEW COMMENTS

SHEET TITLE:

FIRE PROTECTION
SYSTEM FLOOR
PLAN

LICENSED PROFESSIONAL ENGINEER
JOSEPH P. ZARI
FP 1726
EXP. 6-30-18
FIRE PROTECTION
STATE OF CALIFORNIA

SCALE:	AS NOTED
DATE:	18–JULY–17
PROJECT NO:	
PERMIT APPLICATION NO.:	

SHEET NUMBER:

FP3-0

MECHANICAL SYMBOLS

SYMBOL	DESCRIPTION
	POINT OF CONNECTION (POC)
T	THERMOSTAT OR TEMPERATURE SENSOR, MAX 48" A.F.F
H	HUMIDISTAT
SD	SMOKE DETECTOR
	SECTION AT ROUND DUCT
	SECTION AT RECTANGULAR SUPPLY AIR DUCT
	SECTION AT RECTANGULAR RETURN AIR DUCT
	SECTION AT RECTANGULAR EXHAUST AIR DUCT
	LAY-IN SUPPLY AIR DIFFUSER
	LAY-IN RETURN AIR GRILLE
	LAY-IN EXHAUST AIR GRILLE
	SIDEWALL DIFFUSER/GRILLE
	SUPPLY AIR FLOW ARROW
	RETURN/EXHAUST AIR FLOW ARROW
	SURFACE MOUNTED SUPPLY AIR DIFFUSER
	SURFACE MOUNTED RETURN AIR GRILLE
	ROUND SUPPLY AIR DIFFUSER
300 CFM	CFM - AIRFLOW
	MANUAL VOLUME DAMPER
M	MOTORIZED DAMPER
BD	BACKDRAFT DAMPER
FSD	COMBINATION FIRE/SMOKE DAMPER

RECTANGULAR DUCT LEGEND

SYMBOL	DESCRIPTION
	RECTANGULAR DUCT WITH LINING
20"x12"	DUCT WIDTH x HEIGHT, DIMENSIONS ARE NET INSIDE.
R OR D	DUCT RISE OR DROP IN DIRECTION OF AIRFLOW
	FLEXIBLE DUCT (SHOWN WITH DIFFUSER)
	SQUARE-TO-ROUND TRANSITION
	FLEXIBLE CONNECTION
	90° ELL W/ TURNING VANES (RADIUS ELL IS ACCEPTABLE)
	90° TAP
	45° TAP
	RECTANGULER TEE

ROUND DUCT LEGEND

LINETYPE	DESCRIPTION
	AIR DUCT (SINGLE LINE)
12"ø	AIR DUCT (DOUBLE LINE), DIMENSION IS NET INSIDE
	45° DUCT BRANCH
	90° DUCT BRANCH
	SHORT RADIUS 90° ELBOW (SPIRAL)
	LONG RADIUS 90° ELBOW (SPIRAL)
	SHORT RADIUS 45° ELBOW (SPIRAL)
	LONG RADIUS 45° ELBOW (SPIRAL)
	BULL HEAD TEE (SPIRAL)
	ROUND DUCT TRANSITION (SPIRAL)
	SQUARE-TO-ROUND DUCT TRANSITION (SPIRAL)
	90° DUCT TAP (SPIRAL)
	DUCT OR FLUE THRU ROOF OR FLOOR

MECHANICAL LEGEND

ABBREVIATION	DESCRIPTION	ABBREVIATION	DESCRIPTION
AAV	AUTOMATIC AIR VENT	HHWS	HEATING HOT WATER SUPPLY
AFF	ABOVE FINISHED FLOOR	HHWR	HEATING HOT WATER RETURN
A.L.	ACOUSTIC LINING (1" LINING UON)	IN	INCHES
APPROX.	APPROXIMATELY	LBS	POUNDS
BFP	BACKFLOW PREVENTER	MFR	MANUFACTURER
CD	CONDENSATE DRAIN	(N)	NEW
CFM	CUBIC FEET PER MINUTE	NC	NORMALLY CLOSED
CTE	CONNECT TO EXISTING	NIC	NOT IN CONTRACT
DIA	DIAMETER	NO	NORMALLY OPEN
DN	DOWN	NTS	NOT TO SCALE
DWG	DRAWING	OC	ON CENTER
(E)	EXISTING	OD	OUTSIDE DIAMETER
EA	EXHAUST AIR	PD	PRESSURE DROP
EF	EXHAUST FAN	POC	POINT OF CONNECTION
EL	ELEVATION	PSI	POUNDS PER SQUARE INCH
ESP	EXTERNAL STATIC PRESSURE	(RL)	RELOCATED
(F)	FUTURE	RPM	REVOLUTIONS PER MINUTE
FC	FLEX CONNECTOR	SD	SMOKE DETECTOR
FD	FIRE DAMPER	SP	STATIC PRESSURE
FT	FEET	SOV	SHUT-OFF VALVE
FSD	FIRE SMOKE DAMPER	ST	STRAINER
GA	U.S. GAUGE	TYP.	TYPICAL
GSM	GALVANIZED SHEET METAL	UCD	UNDERCUT DOOR
GPH	GALLONS PER HOUR	UON	UNLESS OTHERWISE NOTED
GPM	GALLONS PER MINUTE		

DRAWING INDEX

M0.1	MECHANICAL NOTES, SYMBOL, LEGEND AND SCHEDULE
M0.2	MECHANICAL TITLE 24
M0.3	HVAC LOAD CALCULATION
M2.1	MECHANICAL FLOOR PLAN
M2.1D	MECHANICAL DEMO FLOOR PLAN
M2.2	MECHANICAL ROOF PLAN
M2.2D	MECHANICAL DEMO ROOF PLAN
M4.1	MECHANICAL SCHEDULE
M6.1	MECHANICAL DETAILS
M6.2	MECHANICAL DETAILS

MECHANICAL SCOPE OF WORK

THE MECHANICAL SCOPE OF WORK UNDER THIS APPLICATION IS THE NEW AIR DISTRIBUTION DUCT FOR THE CLASSROOMS AND OFFICES. EXISTING ROOFTOP AC UNITS ARE RE-USED. EXISTING SPLIT HEAT PUMP UNIT IS RELOCATED AND RE-USED.

GENERAL NOTES

1. ALL WORK UNDER THIS DIVISION SHALL BE COORDINATED WITH OTHER TRADES. DUCT, PIPE AND WIRING SHALL BE ROUTED TO CLEAR ARCHITECTUAL OPENINGS, STRUCTUAL MEMBERS OR OTHER OBSTRUCTION.
2. CONTRACTOR SHALL BE THROUGHLY FAMILIAR WITH THE INTENT OF THE CONSTRUCTION DOCUMENT AND SCOPE OF WORK BEFORE SUBMITING A BID. DURING CONSTRUCTION, CONTRACTOR IS RESPONSIBLE FOR SAFE WORKING CONDITIONS THAT INCLUDES SAFETY OF ALL PERSONS AND PROPERTY.
3. PROVIDE ALL LABOR, MATERIAL AND EQUIPMENT THAT ARE REQUIRED TO PROVIDE A COMPLETE INSTALLATION AS SHOWN ON THE DRAWINGS, INCLUDING THAT REASONABLLY INFERRED FOR PROPER EXECUTION OF THE INSTALLATION.
   PROVIDE CUTTING AND PATCHING AS REQUIRED FOR THE INSTALLATION. REPAIR OR REPLACE ANY DAMAGE CAUSED BY THE WORK AND LEAKS/BREAKS OF THE SYSTEM.
   FURNISH VLAVES AND TRIM NOT SPECIFICALLY INDICAED BUT REQUIRED FOR PROPER FUNCTIONING OF EQUIPMENT.
4. DRAWINGS ARE DIAGRAMMATIC. IT'S CONTRACTOR'S RESPONSIBILITY TO VERIFY ACTUAL BUILDING CONDITIONS, EQUIPEMT SIZE, LOCATION AND CONNECTION COMPLY WITH MFG'S INSTALLATION REQUIREMENT.
5. DIFFUSERS AND GRILLES SHALL BE LOCATED ACCORDING TO ARCHITECTUAL REFLECTED CEILING PLAN. CONTRACTOR SHALL INSTALL DAMPER/DAMPER REGULATOR AS REQUIRED.
6. ALL HVAC DUCTWORK SHALL BE GALVANIZED SHEET METAL CONSTRUCTED PER SMACNA'S "HVAC DUCT CONSTRUCTION STANDARDS" UNLESS OTHERWISE NOTED.
   SEAL DUCT SEAM AND JOINTS ACCORDING TO SMACNA'S "HVAC DUCT CONSTRUCTION STANDARDS".
   ALL HVAC DUCT AND PIPE HANGERS/SUPPORTS SHALL BE PER 2008 SMACNA SEISMIC RESTRAINT MANUAL.
7. INSULATE DUCTWORK & HOT WATER PIPE IN ACCORDANCE WITH TITLE 24 REQUIREMENT.
8. HOT WATER PIPE SHALL BE TYPE L DRAWN-TEMPER COPPER TUBING WITH SOLDERED JOINTS.
9. NEW ROOM THERMOSTATS SHALL INSTALLED @48" A.F.F.
10. MECHANICAL CONTRACTOR TO PROVIDE (NEBB) CERTIFIED AIR & WATER BALANCE REPORT.
11. DUCT MOUNTED SMOKE DETECTOR SHALL BE PROVIDED BY ELECTRICAL CONTRACTOR, INSTALLED BY MECHANICAL CONTRACTOR, POWERED BY ELECTRICAL CONTRACTOR, INTERLOCKED FOR FAN-SHUTDOWN BY MECHANICAL CONTRACTOR AND WIRED TO FIRE ALARM PANEL BY ELECTRICAL CONTRACTOR.

MEP Component Anchorage Note

All mechanical, plumbing, and electrical components shall be anchored and installed per the details on the DSA approved construction documents. Where no detail is indicated, the following components shall be anchored or braced to meet the force and displacement requirements prescribed in the 2016 CBC, Sections 1616A.1.18 through 1616A.1.26 and ASCE 7-10 Chapter 13, 26 and 30.

1. All permanent equipment and components.
2. Temporary or movable equipment that is permanently attached (e.g. hard wired) to the building utility services such as electricity, gas or water.
3. Movable equipment which is stationed in one place for more than 8 hours and heavier than 400 pounds or has a center of mass located 4 feet or more above the adjacent floor or roof level that directly support the component are required to be anchored with temporary attachments.

The following mechanical and electrical components shall be positively attached to the structure, but the attachment need not be detailed on the plans. These components shall have flexible connections provided between the component and associated ductwork, piping, and conduit.

A. Components weighing less than 400 pounds and have a center of mass located 4 feet or less above the adjacent floor or roof level that directly support the component.
B. Components weighing less than 20 pounds, or in the case of distributed systems, less than 5 pounds per foot, which are suspended from a roof or floor or hung from a wall.

For those elements that do not require details on the approved drawings, the installation shall be subject to the approval of the design professional in general responsible charge or structural engineer delegated responsibility and the DSA District Structural Engineer. The project inspector will verify that all components and equipment have been anchored in accordance with above requirements.

Piping, Ductwork, and Electrical Distribution System Bracing Note

Piping, ductwork, and electrical distribution systems shall be braced to comply with the forces and displacements prescribed in ASCE 7-10 Section 13.3 as defined in ASCE 7-10 Section 13.6.5.6, 13.6.7, 13.6.8, and 2016 CBC, Sections 1616A.1.24, 1616A.1.25 and 1616A.1.26.

The method of showing bracing and attachments to the structure for the identified distribution system are as noted below. When bracing and attachments are based on a preapproved installation guide (e.g., SMACNA or OSHPD OPM), copies of the bracing system installation guide or manual shall be available on the jobsite prior to the start of and during the hanging and bracing of the distribution systems. The Structural Engineer of Record shall verify the adequacy of the structure to support the hanger and brace loads.

Mechanical Piping (MP), Mechanical Ducts (MD), Plumbing Piping (PP), Electrical Distribution Systems (E):

MP☐MD☐PP☐ E☐ - Option 1: Detailed on the approved drawings with project specific notes and details.

MP☐MD☐PP☐ E☐ - Option 2: Shall comply with the applicable OSHPD Pre-Approval (OPM #) #_____.

MP☐MD☐PP☐ - Option 3: Shall comply with the SMACNA Seismic Restraint Manual, OSHPD Edition (2009), including any addenda. Fasteners and other attachments not specifically identified in the SMACNA Seismic Restraint Manual, OSHPD Edition, are detailed on the approved drawings with project specific notes and details. The details shall account for the applicable Seismic Hazard Level _____ and Connection Level _____ for the project and conditions.

OWNER:

Solano Community College District
2000 North Village Parkway
Vacaville, CA 95688

ARCHITECT:

CA ARCHITECTS
475 Gate Five Road, Suite 107
Sausalito, CA 94965
T 415.331.7655
F 415.331.7656

PROJECT:

Vacaville Classroom Building (Annex) Renovation Project

CONSULTANT TEAM:

EXCEL ENGINEERS
825 ORANGE AVE.
SUNNYVALE, CA 94087
Telephone: 408 - 230-9164
Fax: 408 - 749-9989

STAMP

REGISTERED PROFESSIONAL ENGINEER
YUE XU
No. 31549
EXP. 12/31/18
MECHANICAL
STATE OF CALIFORNIA

SHEET LEGEND:

ISSUE/REVISION:

NO:	DATE:	DESCRIPTION:
	04/25/2017	ISSUE FOR DD 100%
	06/06/2017	ISSUE FOR CD 50%
	06/30/2017	ISSUE FOR CD 60%
	07/20/2017	ISSUE FOR CD 100%
	10/18/2017	DSA BACKCHECK

KEY PLAN:

FILE: 48-C1

IDENTIFICATION STAMP
DIVISION OF THE STATE ARCHITECT

02-116082

AC TCC FLS GBC SS PVL

DATE: 10/31/2017

SCALE:
DATE:
PROJECT NO:
PERMIT APPLICATION NO.:

MECHANICAL NOTES, SYMBOL, LEGEND AND SCHEDULE

M0.1

STATE OF CALIFORNIA
MECHANICAL SYSTEMS
CEC-NRCC-MCH-01-E (Revised 01/16) CALIFORNIA ENERGY COMMISSION

CERTIFICATE OF COMPLIANCE	NRCC-MCH-01-E
Mechanical Systems	(Page 1 of 4)
Project Name: SCCD Vacaville Annex Building Renovation	Date Prepared: 6/5/2017

A. MECHANICAL COMPLIANCE DOCUMENTS & WORKSHEETS (check box if worksheet is included)
For detailed instructions on the use of this and all Energy Efficiency Standards compliance forms, refer to the 2016 Nonresidential Manual
Note: The Enforcement Agency may require all forms to be incorporated onto the building plans.

YES	NO	Comp. Doc./Worksheet #	Title
☒	☐	NRCC-MCH-01-E (Part 1 of 3)	Certificate of Compliance, Declaration. Required on plans for all submittals.
☒	☐	NRCC-MCH-01-E (Part 2 of 3)	Certificate of Compliance, Required Acceptance Tests (MCH-02-A to 11-A). Required on plans for all submittals.
☒	☐	NRCC-MCH-01-E (Part 3 of 3)	Certificate of Compliance, Required Acceptance Tests (MCH-12-A to 18-A). Required on plans where applicable.
☒	☐	NRCC-MCH-02-E (Part 1 of 2)	Mechanical Dry Equipment Summary is required for all submittals with Central Air Systems. It is optional on plans.
☒	☐	NRCC-MCH-02-E (Part 2 of 2)	Mechanical Wet Equipment Summary is required for all submittals with chilled water, hot water or condenser water systems. It is optional on plans.
☒	☐	NRCC-MCH-03-E	Mechanical Ventilation and Reheat is required for all submittals with multiple zone heating and cooling systems. It is optional on plans.
☐	☒	NRCC-MCH-07-E (Part 1 of 2)	Power Consumption of Fans. Required on plans where applicable
☐	☒	NRCC-MCH-07-E (Part 2 of 2)	Power Consumption of Fans, Declaration. Required on plans where applicable

CA Building Energy Efficiency Standards - 2016 Nonresidential Compliance January 2016

STATE OF CALIFORNIA
MECHANICAL SYSTEMS
CEC-NRCC-MCH-01-E (Revised 05/15) CALIFORNIA ENERGY COMMISSION

CERTIFICATE OF COMPLIANCE	NRCC-MCH-01-E
Mechanical Systems	(Page 2 of 4)
Project Name: SCCD Vacaville Annex Building Renovation	Date Prepared: 6/5/2017

B. MECHANICAL HVAC ACCEPTANCE FORMS (check box for required forms)
Test Performed By:
Designer:
This form is to be used by the designer and attached to the plans. Listed below are all the acceptance tests for HVAC systems. The designer is required to check the applicable boxes for all acceptance tests that apply and list all equipment that requires an acceptance test. All equipment of the same type that requires a test, list the equipment description and the number of systems.
Installing Contractor:
The contractor who installed the equipment is responsible to either conduct the acceptance test them self or have a qualified entity run the test for them. If more than one person has responsibility for the acceptance testing, each person shall sign and submit the Certificate of Acceptance applicable to the portion of the construction or installation for which they are responsible.
Enforcement Agency:
Plancheck – The NRCC-MCH-01-E form is not considered a completed form and is not to be accepted by the building department unless the correct boxes are checked.
Inspector - Before occupancy permit is granted all newly installed process systems must be tested to ensure proper operations.

Test Description		MCH-02A	MCH-03A	MCH-04A	MCH-05A	MCH-06A	MCH-07A	MCH-08A	MCH-09A	MCH-10A	MCH-11A
Equipment Requiring Testing or Verification	# of Units	Outdoor Air	Single Zone Unitary	Air Distribution Ducts	Economizer Controls	Demand Control Ventilation (DCV)	Supply Fan VAV	Valve Leakage Test	Supply Water Temp. Reset	Hydronic System Variable Flow Control	Automatic Demand Shed Control
		☐	☐	☐	☐	☐	☐	☐	☐	☐	☐
		☐	☐	☐	☐	☐	☐	☐	☐	☐	☐
		☐	☐	☐	☐	☐	☐	☐	☐	☐	☐
		☐	☐	☐	☐	☐	☐	☐	☐	☐	☐
		☐	☐	☐	☐	☐	☐	☐	☐	☐	☐
		☐	☐	☐	☐	☐	☐	☐	☐	☐	☐
		☐	☐	☐	☐	☐	☐	☐	☐	☐	☐
		☐	☐	☐	☐	☐	☐	☐	☐	☐	☐
		☐	☐	☐	☐	☐	☐	☐	☐	☐	☐
		☐	☐	☐	☐	☐	☐	☐	☐	☐	☐

CA Building Energy Efficiency Standards - 2013 Nonresidential Compliance May 2015

STATE OF CALIFORNIA
MECHANICAL SYSTEMS
CEC-NRCC-MCH-01-E (Revised 01/16) CALIFORNIA ENERGY COMMISSION

CERTIFICATE OF COMPLIANCE	NRCC-MCH-01-E
Mechanical Systems	(Page 3 of 4)
Project Name: SCCD Vacaville Annex Building Renovation	Date Prepared: 6/5/2017

C. MECHANICAL HVAC ACCEPTANCE FORMS (check box for required compliance documents)
Test Performed By:
Designer:
This compliance document is to be used by the designer and attached to the plans. Listed below are all the acceptance tests for HVAC systems. The designer is required to check the applicable boxes for all acceptance tests that apply and list all equipment that requires an acceptance test. All equipment of the same type that requires a test, list the equipment description and the number of systems.
Installing Contractor:
The contractor who installed the equipment is responsible to either conduct the acceptance test themselves or have a qualified entity run the test for them. If more than one person has responsibility for the acceptance testing, each person shall sign and submit the Certificate of Acceptance applicable to the portion of the construction or installation for which they are responsible.
Enforcement Agency:
Plancheck – The NRCC-MCH-01-E compliance document is not considered a completed document and is not to be accepted by the building department unless the correct boxes are checked.
Inspector - Before occupancy permit is granted all newly installed process systems must be tested to ensure proper operations.

Test Description		MCH-12-A	MCH-13-A	MCH-14-A	MCH-15-A	MCH-16-A	MCH-17-A	MCH-18-A
Equipment Requiring Testing or Verification	# of Units	Fault Detection & Diagnostics for DX Units	Automatic Fault Detection & Diagnostics for Air & Zone	Distributed Energy Storage DX AC Systems	Thermal Energy Storage (TES) Systems	Supply Air Temperature Reset Controls	Condenser Water Reset Controls	ECMS
		☐	☐	☐	☐	☐	☐	☐
		☐	☐	☐	☐	☐	☐	☐
		☐	☐	☐	☐	☐	☐	☐
		☐	☐	☐	☐	☐	☐	☐
		☐	☐	☐	☐	☐	☐	☐
		☐	☐	☐	☐	☐	☐	☐
		☐	☐	☐	☐	☐	☐	☐
		☐	☐	☐	☐	☐	☐	☐
		☐	☐	☐	☐	☐	☐	☐
		☐	☐	☐	☐	☐	☐	☐

CA Building Energy Efficiency Standards - 2016 Nonresidential Compliance January 2016

STATE OF CALIFORNIA
MECHANICAL SYSTEMS
CEC-NRCC-MCH-01-E (Revised 01/16) CALIFORNIA ENERGY COMMISSION

CERTIFICATE OF COMPLIANCE	NRCC-MCH-01-E
Mechanical Systems	(Page 4 of 4)
Project Name: SCCD Vacaville Annex Building Renovation	Date Prepared: 6/5/2017

DOCUMENTATION AUTHOR'S DECLARATION STATEMENT
1. I certify that this Certificate of Compliance documentation is accurate and complete.

Documentation Author Name: Steven Xu	Documentation Author Signature:
Company: Excel Engineers	Signature Date: 6/5/2017
Address: 825 Orange Ave.	CEA/ HERS Certification Identification (if applicable): M31549
City/State/Zip: Sunnyvale, CA 94087	Phone: 408-749-9989

RESPONSIBLE PERSON'S DECLARATION STATEMENT
I certify the following under penalty of perjury, under the laws of the State of California:
1. The information provided on this Certificate of Compliance is true and correct.
2. I am eligible under Division 3 of the Business and Professions Code to accept responsibility for the building design or system design identified on this Certificate of Compliance (responsible designer).
3. The energy features and performance specifications, materials, components, and manufactured devices for the building design or system design identified on this Certificate of Compliance conform to the requirements of Title 24, Part 1 and Part 6 of the California Code of Regulations.
4. The building design features or system design features identified on this Certificate of Compliance are consistent with the information provided on other applicable compliance documents, worksheets, calculations, plans and specifications submitted to the enforcement agency for approval with this building permit application.
5. I will ensure that a completed signed copy of this Certificate of Compliance shall be made available with the building permit(s) issued for the building, and made available to the enforcement agency for all applicable inspections. I understand that a completed signed copy of this Certificate of Compliance is required to be included with the documentation the builder provides to the building owner at occupancy.

Responsible Designer Name: Steven Xu	Responsible Designer Signature:
Company : Excel Engineers	Date Signed:
Address: 825 Orange Ave.	License: M31549
City/State/Zip: Sunnyvale, CA 94087	Phone: (408)230-9164

CA Building Energy Efficiency Standards - 2016 Nonresidential Compliance January 2016

STATE OF CALIFORNIA
HVAC DRY & WET SYSTEM REQUIREMENTS
CEC-NRCC-MCH-02-E (Revised 01/16) CALIFORNIA ENERGY COMMISSION

CERTIFICATE OF COMPLIANCE	NRCC-MCH-02-E
HVAC Dry & Wet System Requirements	(Page 1 of 3)
Project Name: SCCD Vacaville Annex Building Renovation	Date Prepared: 6/5/2017

A. Equipment Tags and System Description[1] – Dry Systems		(E) AC-1	(E) AC-2	(E) AC-3
MANDATORY MEASURES	*T-24 Sections*	*Reference to the Requirements in the Contract Documents[2]*		
Heating Equipment Efficiency[3]	110.1 or 110.2(a)	M0.1	M0.1	M0.1
Cooling Equipment Efficiency[3]	110.1 or 110.2(a)	M0.1	M0.1	M0.1
HVAC or Heat Pump Thermostats	110.2(b), 110.2(c)	M0.1	M0.1	M0.1
Furnace Standby Loss Control	110.2(d)	M0.1	M0.1	M0.1
Low Leakage AHUs	110.2(f)	M0.1	M0.1	M0.1
Ventilation[4]	120.1(b)	M0.1	M0.1	M0.1
Demand Control Ventilation[5]	120.1(c)4	M0.1	M0.1	M0.1
Occupant Sensor Ventilation Control[6]	120.1(c)5, 120.2(e)3	M0.1	M0.1	M0.1
Shutoff and Reset Controls[7]	120.2(e)	M0.1	M0.1	M0.1
Outdoor Air and Exhaust Damper Control	120.2(f)	M0.1	M0.1	M0.1
Isolation Zones	120.2(g)	M0.1	M0.1	M0.1
Automatic Demand Shed Controls	120.2(h)	M0.1	M0.1	M0.1
Economizer FDD	120.2(i)	M0.1	M0.1	M0.1
Duct Insulation	120.4	M0.1	M0.1	M0.1
PRESCRIPTIVE MEASURES				
Equipment is sized in conformance with 140.4(a & b)	140.4(a & b)	Y Y/N	Y Y/N	Y Y/N
Supply Fan Pressure Control	140.4(c)	M0.1	M0.1	M0.1
Simultaneous Heat/Cool[8]	140.4(d)	M0.1	M0.1	M0.1
Economizer	140.4(e)	M0.1	M0.1	M0.1
Heat and Cool Air Supply Reset	140.4(f)	M0.1	M0.1	M0.1
Electric Resistance Heating[9]	140.4(g)	M0.1	M0.1	M0.1
Duct Leakage Sealing and Testing[10]	140.4(l)	M0.1	M0.1	M0.1

Notes:
1. Provide equipment tags (e.g. AHU 1 to 10) and system description (e.g. Single Duct VAV reheat) as appropriate. Multiple units with common requirements can be grouped together.
2. Provide references to plans (i.e. Drawing Sheet Numbers) and/or specifications (including Section name/number and relevant paragraphs) where each requirement is specified. Enter "N/A" if the requirement is not applicable to this system.
3. The referenced plans and specifications must include all of the following information: equipment tag, equipment nominal capacity, Title 24 minimum efficiency requirements, and actual rated equipment efficiencies. Where multiple efficiency requirements are applicable (e.g. full- and part-load) include all. Where appliance standards apply (110.1), identify where equipment is required to be listed per Title 20 1601 et seq.
4. Identify where the ventilation requirements are documented for each central HVAC system. Include references to both central unit schedules and sequences of operation. If one or more spaces is naturally ventilated identify where this is documented in the plans and specifications. Multiple zone central air systems must also provide a MCH-03-E compliance document.
5. If one or more spaces has demand controlled ventilation identify where it is specified including the sensor specifications and the sequence of operation.
6. If one or more space has occupant sensor ventilation control identify where it is specified including the sensor specifications and the sequence of operation
7. If the system is DDC identify the sequences for the system start/stop, optimal start, setback (if required) and setup (if required). For all systems identify the specification for the thermostats and time clocks (if applicable).
8. Identify where the heating, cooling and deadband airflows are scheduled for this system. Include a reference to the specification of the zone controls. Provide a MCH-03-E compliance document.
9. Enter N/A if there is no electric heating. If the system has electric heating indicate which exception to 140.4(g) applies.
10. If duct leakage sealing and testing is required, a MCH-04-A compliance document must be submitted.

CA Building Energy Efficiency Standards - 2016 Nonresidential Compliance January 2016

STATE OF CALIFORNIA
HVAC DRY & WET SYSTEM REQUIREMENTS
CEC-NRCC-MCH-02-E (Revised 01/16) CALIFORNIA ENERGY COMMISSION

CERTIFICATE OF COMPLIANCE	NRCC-MCH-02-E
HVAC Dry & Wet System Requirements	(Page 1 of 3)
Project Name: SCCD Vacaville Annex Building Renovation	Date Prepared: 6/5/2017

A. Equipment Tags and System Description[1] – Dry Systems		(E) AC-4	(E) AC-5	(E) AC-6
MANDATORY MEASURES	*T-24 Sections*	*Reference to the Requirements in the Contract Documents[2]*		
Heating Equipment Efficiency[3]	110.1 or 110.2(a)	M0.1	M0.1	M0.1
Cooling Equipment Efficiency[3]	110.1 or 110.2(a)	M0.1	M0.1	M0.1
HVAC or Heat Pump Thermostats	110.2(b), 110.2(c)	M0.1	M0.1	M0.1
Furnace Standby Loss Control	110.2(d)	M0.1	M0.1	M0.1
Low Leakage AHUs	110.2(f)	M0.1	M0.1	M0.1
Ventilation[4]	120.1(b)	M0.1	M0.1	M0.1
Demand Control Ventilation[5]	120.1(c)4	M0.1	M0.1	M0.1
Occupant Sensor Ventilation Control[6]	120.1(c)5, 120.2(e)3	M0.1	M0.1	M0.1
Shutoff and Reset Controls[7]	120.2(e)	M0.1	M0.1	M0.1
Outdoor Air and Exhaust Damper Control	120.2(f)	M0.1	M0.1	M0.1
Isolation Zones	120.2(g)	M0.1	M0.1	M0.1
Automatic Demand Shed Controls	120.2(h)	M0.1	M0.1	M0.1
Economizer FDD	120.2(i)	M0.1	M0.1	M0.1
Duct Insulation	120.4	M0.1	M0.1	M0.1
PRESCRIPTIVE MEASURES				
Equipment is sized in conformance with 140.4(a & b)	140.4(a & b)	Y Y/N	Y Y/N	Y Y/N
Supply Fan Pressure Control	140.4(c)	M0.1	M0.1	M0.1
Simultaneous Heat/Cool[8]	140.4(d)	M0.1	M0.1	M0.1
Economizer	140.4(e)	M0.1	M0.1	M0.1
Heat and Cool Air Supply Reset	140.4(f)	M0.1	M0.1	M0.1
Electric Resistance Heating[9]	140.4(g)	M0.1	M0.1	M0.1
Duct Leakage Sealing and Testing[10]	140.4(l)	M0.1	M0.1	M0.1

Notes:
1. Provide equipment tags (e.g. AHU 1 to 10) and system description (e.g. Single Duct VAV reheat) as appropriate. Multiple units with common requirements can be grouped together.
2. Provide references to plans (i.e. Drawing Sheet Numbers) and/or specifications (including Section name/number and relevant paragraphs) where each requirement is specified. Enter "N/A" if the requirement is not applicable to this system.
3. The referenced plans and specifications must include all of the following information: equipment tag, equipment nominal capacity, Title 24 minimum efficiency requirements, and actual rated equipment efficiencies. Where multiple efficiency requirements are applicable (e.g. full- and part-load) include all. Where appliance standards apply (110.1), identify where equipment is required to be listed per Title 20 1601 et seq.
4. Identify where the ventilation requirements are documented for each central HVAC system. Include references to both central unit schedules and sequences of operation. If one or more spaces is naturally ventilated identify where this is documented in the plans and specifications. Multiple zone central air systems must also provide a MCH-03-E compliance document.
5. If one or more spaces has demand controlled ventilation identify where it is specified including the sensor specifications and the sequence of operation.
6. If one or more space has occupant sensor ventilation control identify where it is specified including the sensor specifications and the sequence of operation
7. If the system is DDC identify the sequences for the system start/stop, optimal start, setback (if required) and setup (if required). For all systems identify the specification for the thermostats and time clocks (if applicable).
8. Identify where the heating, cooling and deadband airflows are scheduled for this system. Include a reference to the specification of the zone controls. Provide a MCH-03-E compliance document.
9. Enter N/A if there is no electric heating. If the system has electric heating indicate which exception to 140.4(g) applies.
10. If duct leakage sealing and testing is required, a MCH-04-A compliance document must be submitted.

CA Building Energy Efficiency Standards - 2016 Nonresidential Compliance January 2016

STATE OF CALIFORNIA
HVAC DRY & WET SYSTEM REQUIREMENTS
CEC-NRCC-MCH-02-E (Revised 01/16) CALIFORNIA ENERGY COMMISSION

CERTIFICATE OF COMPLIANCE	NRCC-MCH-02-E
HVAC Dry & Wet System Requirements	(Page 1 of 3)
Project Name: SCCD Vacaville Annex Building Renovation	Date Prepared: 6/5/2017

A. Equipment Tags and System Description[1] – Dry Systems		(E) AC-7	(E) AC-8	
MANDATORY MEASURES	*T-24 Sections*	*Reference to the Requirements in the Contract Documents[2]*		
Heating Equipment Efficiency[3]	110.1 or 110.2(a)	M0.1	M0.1	
Cooling Equipment Efficiency[3]	110.1 or 110.2(a)	M0.1	M0.1	
HVAC or Heat Pump Thermostats	110.2(b), 110.2(c)	M0.1	M0.1	
Furnace Standby Loss Control	110.2(d)	M0.1	M0.1	
Low Leakage AHUs	110.2(f)	M0.1	M0.1	
Ventilation[4]	120.1(b)	M0.1	M0.1	
Demand Control Ventilation[5]	120.1(c)4	M0.1	M0.1	
Occupant Sensor Ventilation Control[6]	120.1(c)5, 120.2(e)3	M0.1	M0.1	
Shutoff and Reset Controls[7]	120.2(e)	M0.1	M0.1	
Outdoor Air and Exhaust Damper Control	120.2(f)	M0.1	M0.1	
Isolation Zones	120.2(g)	M0.1	M0.1	
Automatic Demand Shed Controls	120.2(h)	M0.1	M0.1	
Economizer FDD	120.2(i)	M0.1	M0.1	
Duct Insulation	120.4	M0.1	M0.1	
PRESCRIPTIVE MEASURES				
Equipment is sized in conformance with 140.4(a & b)	140.4(a & b)	Y Y/N	Y Y/N	Y/N
Supply Fan Pressure Control	140.4(c)	M0.1	M0.1	
Simultaneous Heat/Cool[8]	140.4(d)	M0.1	M0.1	
Economizer	140.4(e)	M0.1	M0.1	
Heat and Cool Air Supply Reset	140.4(f)	M0.1	M0.1	
Electric Resistance Heating[9]	140.4(g)	M0.1	M0.1	
Duct Leakage Sealing and Testing[10]	140.4(l)	M0.1	M0.1	

Notes:
1. Provide equipment tags (e.g. AHU 1 to 10) and system description (e.g. Single Duct VAV reheat) as appropriate. Multiple units with common requirements can be grouped together.
2. Provide references to plans (i.e. Drawing Sheet Numbers) and/or specifications (including Section name/number and relevant paragraphs) where each requirement is specified. Enter "N/A" if the requirement is not applicable to this system.
3. The referenced plans and specifications must include all of the following information: equipment tag, equipment nominal capacity, Title 24 minimum efficiency requirements, and actual rated equipment efficiencies. Where multiple efficiency requirements are applicable (e.g. full- and part-load) include all. Where appliance standards apply (110.1), identify where equipment is required to be listed per Title 20 1601 et seq.
4. Identify where the ventilation requirements are documented for each central HVAC system. Include references to both central unit schedules and sequences of operation. If one or more spaces is naturally ventilated identify where this is documented in the plans and specifications. Multiple zone central air systems must also provide a MCH-03-E compliance document.
5. If one or more spaces has demand controlled ventilation identify where it is specified including the sensor specifications and the sequence of operation.
6. If one or more space has occupant sensor ventilation control identify where it is specified including the sensor specifications and the sequence of operation
7. If the system is DDC identify the sequences for the system start/stop, optimal start, setback (if required) and setup (if required). For all systems identify the specification for the thermostats and time clocks (if applicable).
8. Identify where the heating, cooling and deadband airflows are scheduled for this system. Include a reference to the specification of the zone controls. Provide a MCH-03-E compliance document.
9. Enter N/A if there is no electric heating. If the system has electric heating indicate which exception to 140.4(g) applies.
10. If duct leakage sealing and testing is required, a MCH-04-A compliance document must be submitted.

CA Building Energy Efficiency Standards - 2016 Nonresidential Compliance January 2016

STATE OF CALIFORNIA
HVAC DRY & WET SYSTEM REQUIREMENTS
CEC-NRCC-MCH-02-E (Revised 01/16) CALIFORNIA ENERGY COMMISSION

CERTIFICATE OF COMPLIANCE	NRCC-MCH-02-E
HVAC Dry & Wet System Requirements	(Page 2 of 3)
Project Name: SCCD Vacaville Annex Building Renovation	Date Prepared: 6/5/2017

B. Equipment Tags and System Description[1] – Wet Systems				
MANDATORY MEASURES	*T-24 Sections*	*Reference to the Requirements in the Contract Documents[2]*		
Heating Hot Water Equipment Efficiency[3]	110.1			
Cooling Chilled and Condenser Water Equipment Efficiency[3]	110.1, 140.4(i)			
Open and Closed Circuit Cooling Towers conductivity or flow-based controls	110.2(e) 1			
Open and Closed Circuit Cooling Towers Maximum Achievable Cycles of Concentration (LSI)[6]	110.2(e) 2			
Open and Closed Circuit Cooling Towers Flow Meter with analog output	110.2(e) 3			
Open and Closed Circuit Cooling Towers Overflow Alarm	110.2(e) 4			
Open and Closed Circuit Cooling Towers Efficient Drift Eliminators	110.2(e) 5			
Pipe Insulation	120.3			
PRESCRIPTIVE MEASURES				
Cooling Tower Fan Controls	140.4(h)2, 140.4(h)5	Y/N	Y/N	Y/N
Cooling Tower Flow Controls	140.4(h)3			
Centrifugal Fan Cooling Towers[4]	140.4(h)4			
Air-Cooled Chiller Limitation[5]	140.4(j)			
Variable Flow System Design	140.4(k)			
Chiller and Boiler Isolation	140.4(k)			
CHW and HHW Reset Controls	140.4(k)			
WLHP Isolation Valves	140.4(k)			
VSD on CHW, CW & WLHP Pumps >5HP	140.4(k)			
DP Sensor Location	140.4(k)			

Notes:
1. Provide equipment tags (e.g. CH 1 to 3) or system description (e.g. CHW loop) as appropriate. Multiple units with common requirements can be grouped together.
2. Provide references to plans (i.e. Drawing Sheet Numbers) and/or specifications (including Section name/number and relevant paragraphs) where each requirement is specified. Enter "N/A" if the requirement is not applicable to this system.
3. The referenced plans and specifications must include all of the following information: equipment tag, equipment nominal capacity, Title 24 minimum efficiency requirements, and actual rated equipment efficiencies. Where multiple efficiency requirements are applicable (e.g. full- and part-load) include all. For chillers operating at non-standard efficiencies provide the Kadj values. For chillers also note whether the efficiencies are Path A or Path B.
4. Identify if cooling towers have propeller fans. If towers use centrifugal fans document which exception is used.
5. If air-cooled chillers are used, document which exceptions have been used to comply with 140.4(j) and the total installed design capacity of the air-cooled chillers in the chilled water plant.
6. Identify the existence of a completed MCH-06-E when open or closed circuit cooling towers are specified to be installed, otherwise enter "N/A".

CA Building Energy Efficiency Standards - 2016 Nonresidential Compliance January 2016

STATE OF CALIFORNIA
HVAC SYSTEM REQUIREMENTS
CEC-NRCC-MCH-02-E (Revised 06/14) CALIFORNIA ENERGY COMMISSION

CERTIFICATE OF COMPLIANCE	NRCC-MCH-02-E
HVAC Wet System Requirements	(Page 3 of 3)
Project Name: SCCD Vacaville Annex Building Renovation	Date Prepared: 6/5/2017

DOCUMENTATION AUTHOR'S DECLARATION STATEMENT
1. I certify that this Certificate of Compliance documentation is accurate and complete.

Documentation Author Name: Steven Xu	Documentation Author Signature:
Company: Excel Engineers	Signature Date: 6/5/2017
Address: 825 Orange Ave.	CEA/ HERS Certification Identification (if applicable): M31549
City/State/Zip: Sunnyvale, CA 94087	Phone: 408-749-9989

RESPONSIBLE PERSON'S DECLARATION STATEMENT
I certify the following under penalty of perjury, under the laws of the State of California:
1. The information provided on this Certificate of Compliance is true and correct.
2. I am eligible under Division 3 of the Business and Professions Code to accept responsibility for the building design or system design identified on this Certificate of Compliance (responsible designer).
3. The energy features and performance specifications, materials, components, and manufactured devices for the building design or system design identified on this Certificate of Compliance conform to the requirements of Title 24, Part 1 and Part 6 of the California Code of Regulations.
4. The building design features or system design features identified on this Certificate of Compliance are consistent with the information provided on other applicable compliance documents, worksheets, calculations, plans and specifications submitted to the enforcement agency for approval with this building permit application.
5. I will ensure that a completed signed copy of this Certificate of Compliance shall be made available with the building permit(s) issued for the building, and made available to the enforcement agency for all applicable inspections. I understand that a completed signed copy of this Certificate of Compliance is required to be included with the documentation the builder provides to the building owner at occupancy.

Responsible Designer Name: Steven Xu	Responsible Designer Signature:
Company : Excel Engineers	Date Signed:
Address: 825 Orange Ave.	License: M31549
City/State/Zip: Sunnyvale, CA 94087	Phone: (408)230-9164

CA Building Energy Efficiency Standards - 2016 Nonresidential Compliance January 2016

STATE OF CALIFORNIA
MECHANICAL VENTILATION AND REHEAT
CEC-NRCC-MCH-03-E (Revised 05/16) CALIFORNIA ENERGY COMMISSION

CERTIFICATE OF COMPLIANCE	NRCC-MCH-03-E
Mechanical Ventilation & Reheat	(Page 1 of 2)
Project Name: SCCD Vacaville Annex Building Renovation	Date Prepared: 6/5/2017

A. Mechanical Ventilation and Reheat

ACTUAL DESIGN INFO (FROM EQUIPMENT SCHEDULES, ETC)						AREA BASIS			OCCUPANCY BASIS			ROOM BASIS	MINIMUM		VAV Reheated Primary Air CFM			VAV Deadband Primary Air CFM		
01	02	03	04	05	06	07	08	09	10	11	12	13	14	15	16	17	18	19	20	21
ZONE/ SYSTEM/ VAV BOX TAG	DESIGN PRIMARY COOLING AIRFLOW (CFM)	DESIGN PRIMARY DEADBAND AIRFLOW (CFM)	DESIGN PRIMARY HEATING AIRFLOW (CFM)	CNTRL TYPE DDC (Y/N)	TRANSFER AIRFLOW (CFM)	CONDITIONED AREA (ft²)	MIN CFM PER AREA	MIN CFM BY AREA	NUM. OF PEOPLE	CFM PER PERSON	MIN CFM BY OCCUPANT	MIN CFM BY ROOM	REQ'D VENT AIRFLOW (CFM)	COMPLIES?	PERCENTAGE BASED DESIGN PRIMARY COOLING AIR (CFM)	MAXIMUM REHEAT (CFM)	COMPLIES?	% BASED DESIGN PRMY COOLING AIR (CFM)	MAX DEAD-BAND AIRFLOW (CFM)	COMPLIES?
Classrooms						1,969	0.38	748	49.2	15.0	738		748	☒ Pass ☐ Fail			☐ Pass ☐ Fail ☒ N/A			☐ Pass ☐ Fail ☒ N/A
											Total		748	☐ Pass ☐ Fail			☐ Pass ☐ Fail ☐ N/A			☐ Pass ☐ Fail ☐ N/A
Classrooms						1,993	0.38	757	49.8	15.0	747		757	☒ Pass ☐ Fail			☐ Pass ☐ Fail ☒ N/A			☐ Pass ☐ Fail ☒ N/A
											Total		757	☐ Pass ☐ Fail			☐ Pass ☐ Fail ☐ N/A			☐ Pass ☐ Fail ☐ N/A
Classrooms						821	0.38	312	20.5	15.0	308		312	☒ Pass ☐ Fail			☐ Pass ☐ Fail ☒ N/A			☐ Pass ☐ Fail ☒ N/A
											Total		312	☐ Pass ☐ Fail			☐ Pass ☐ Fail ☐ N/A			☐ Pass ☐ Fail ☐ N/A
Classrooms						1,367	0.38	519	34.2	15.0	513		519	☒ Pass ☐ Fail			☐ Pass ☐ Fail ☒ N/A			☐ Pass ☐ Fail ☒ N/A

CA Building Energy Efficiency Standards - 2016 Nonresidential Compliance May 2016

STATE OF CALIFORNIA
MECHANICAL VENTILATION AND REHEAT
CEC-NRCC-MCH-03-E (Revised 05/16) CALIFORNIA ENERGY COMMISSION

CERTIFICATE OF COMPLIANCE	NRCC-MCH-03-E
Mechanical Ventilation & Reheat	(Page 1 of 2)
Project Name: SCCD Vacaville Annex Building Renovation	Date Prepared: 6/5/2017

A. Mechanical Ventilation and Reheat

ACTUAL DESIGN INFO (FROM EQUIPMENT SCHEDULES, ETC)						AREA BASIS			OCCUPANCY BASIS			ROOM BASIS	MINIMUM		VAV Reheated Primary Air CFM			VAV Deadband Primary Air CFM		
01	02	03	04	05	06	07	08	09	10	11	12	13	14	15	16	17	18	19	20	21
ZONE/ SYSTEM/ VAV BOX TAG	DESIGN PRIMARY COOLING AIRFLOW (CFM)	DESIGN PRIMARY DEADBAND AIRFLOW (CFM)	DESIGN PRIMARY HEATING AIRFLOW (CFM)	CNTRL TYPE DDC (Y/N)	TRANSFER AIRFLOW (CFM)	CONDITIONED AREA (ft²)	MIN CFM PER AREA	MIN CFM BY AREA	NUM. OF PEOPLE	CFM PER PERSON	MIN CFM BY OCCUPANT	MIN CFM BY ROOM	REQ'D VENT AIRFLOW (CFM)	COMPLIES?	PERCENTAGE BASED DESIGN PRIMARY COOLING AIR (CFM)	MAXIMUM REHEAT (CFM)	COMPLIES?	% BASED DESIGN PRMY COOLING AIR (CFM)	MAX DEAD-BAND AIRFLOW (CFM)	COMPLIES?
											Total		519	☐ Pass ☐ Fail			☐ Pass ☐ Fail ☐ N/A			☐ Pass ☐ Fail ☐ N/A
Lounge						1,589	0.38	604	26.5	15.0	397		604	☒ Pass ☐ Fail			☐ Pass ☐ Fail ☒ N/A			☐ Pass ☐ Fail ☒ N/A
Admin						660	0.15	99	6.6	15.0	99		99	☒ Pass ☐ Fail			☐ Pass ☐ Fail ☒ N/A			☐ Pass ☐ Fail ☒ N/A
											Total		703	☐ Pass ☐ Fail			☐ Pass ☐ Fail ☐ N/A			☐ Pass ☐ Fail ☐ N/A
Restroom and C						1,625	0.15	244	27.1	15.0	406		406	☒ Pass ☐ Fail			☐ Pass ☐ Fail ☒ N/A			☐ Pass ☐ Fail ☒ N/A
Offices						727	0.15	109	7.3	15.0	109		109	☒ Pass ☐ Fail			☐ Pass ☐ Fail ☒ N/A			☐ Pass ☐ Fail ☒ N/A
											Total		515	☐ Pass ☐ Fail			☐ Pass ☐ Fail ☐ N/A			☐ Pass ☐ Fail ☐ N/A

CA Building Energy Efficiency Standards - 2016 Nonresidential Compliance May 2016

STATE OF CALIFORNIA
MECHANICAL VENTILATION AND REHEAT
CEC-NRCC-MCH-03-E (Revised 05/16) CALIFORNIA ENERGY COMMISSION

CERTIFICATE OF COMPLIANCE	NRCC-MCH-03-E
Mechanical Ventilation & Reheat	(Page 1 of 2)
Project Name: SCCD Vacaville Annex Building Renovation	Date Prepared: 6/5/2017

A. Mechanical Ventilation and Reheat

ACTUAL DESIGN INFO (FROM EQUIPMENT SCHEDULES, ETC)						AREA BASIS			OCCUPANCY BASIS			ROOM BASIS	MINIMUM		VAV Reheated Primary Air CFM			VAV Deadband Primary Air CFM		
01	02	03	04	05	06	07	08	09	10	11	12	13	14	15	16	17	18	19	20	21
ZONE/ SYSTEM/ VAV BOX TAG	DESIGN PRIMARY COOLING AIRFLOW (CFM)	DESIGN PRIMARY DEADBAND AIRFLOW (CFM)	DESIGN PRIMARY HEATING AIRFLOW (CFM)	CNTRL TYPE DDC (Y/N)	TRANSFER AIRFLOW (CFM)	CONDITIONED AREA (ft²)	MIN CFM PER AREA	MIN CFM BY AREA	NUM. OF PEOPLE	CFM PER PERSON	MIN CFM BY OCCUPANT	MIN CFM BY ROOM	REQ'D VENT AIRFLOW (CFM)	COMPLIES?	PERCENTAGE BASED DESIGN PRIMARY COOLING AIR (CFM)	MAXIMUM REHEAT (CFM)	COMPLIES?	% BASED DESIGN PRMY COOLING AIR (CFM)	MAX DEAD-BAND AIRFLOW (CFM)	COMPLIES?
Classrooms						1,954	0.38	743	48.9	15.0	733		743	☒ Pass ☐ Fail			☐ Pass ☐ Fail ☒ N/A			☐ Pass ☐ Fail ☒ N/A
											Total		743	☐ Pass ☐ Fail			☐ Pass ☐ Fail ☐ N/A			☐ Pass ☐ Fail ☐ N/A
Admin Offices						2,063	0.15	309	28.4	15.0	426		426	☒ Pass ☐ Fail			☐ Pass ☐ Fail ☒ N/A			☐ Pass ☐ Fail ☒ N/A
											Total		426	☐ Pass ☐ Fail			☐ Pass ☐ Fail ☐ N/A			☐ Pass ☐ Fail ☐ N/A
														☐ Pass ☐ Fail			☐ Pass ☐ Fail ☐ N/A			☐ Pass ☐ Fail ☐ N/A
														☐ Pass ☐ Fail			☐ Pass ☐ Fail ☐ N/A			☐ Pass ☐ Fail ☐ N/A
														☐ Pass ☐ Fail			☐ Pass ☐ Fail ☐ N/A			☐ Pass ☐ Fail ☐ N/A

CA Building Energy Efficiency Standards - 2016 Nonresidential Compliance May 2016

STATE OF CALIFORNIA
MECHANICAL VENTILATION AND REHEAT
CEC-NRCC-MCH-03-E (Revised 05/16) CALIFORNIA ENERGY COMMISSION

CERTIFICATE OF COMPLIANCE	NRCC-MCH-03-E
Mechanical Ventilation & Reheat	(Page 2 of 2)
Project Name: SCCD Vacaville Annex Building Renovation	Date Prepared: 6/5/2017

DOCUMENTATION AUTHOR'S DECLARATION STATEMENT
1. I certify that this Certificate of Compliance documentation is accurate and complete.

Documentation Author Name: Steven Xu	Documentation Author Signature:
Company: Excel Engineers	Signature Date: 6/5/2017
Address: 825 Orange Ave.	CEA/ HERS Certification Identification (if applicable): M31549
City/State/Zip: Sunnyvale, CA 94087	Phone: 408-749-9989

RESPONSIBLE PERSON'S DECLARATION STATEMENT
I certify the following under penalty of perjury, under the laws of the State of California:
1. The information provided on this Certificate of Compliance is true and correct.
2. I am eligible under Division 3 of the Business and Professions Code to accept responsibility for the building design or system design identified on this Certificate of Compliance (responsible designer).
3. The energy features and performance specifications, materials, components, and manufactured devices for the building design or system design identified on this Certificate of Compliance conform to the requirements of Title 24, Part 1 and Part 6 of the California Code of Regulations.
4. The building design features or system design features identified on this Certificate of Compliance are consistent with the information provided on other applicable compliance documents, worksheets, calculations, plans and specifications submitted to the enforcement agency for approval with this building permit application.
5. I will ensure that a completed signed copy of this Certificate of Compliance shall be made available with the building permit(s) issued for the building, and made available to the enforcement agency for all applicable inspections. I understand that a completed signed copy of this Certificate of Compliance is required to be included with the documentation the builder provides to the building owner at occupancy.

Responsible Designer Name: Steven Xu	Responsible Designer Signature:
Company : Excel Engineers	Date Signed:
Address: 825 Orange Ave.	License: M31549
City/State/Zip: Sunnyvale, CA 94087	Phone: (408)230-9164

CA Building Energy Efficiency Standards - 2016 Nonresidential Compliance May 2016

OWNER:

Solano Community College District
2000 North Village Parkway
Vacaville, CA 95688

ARCHITECT:
CA ARCHITECTS
475 Gate Five Road, Suite 107
Sausalito, CA 94965
T 415.331.7655
F 415.331.7656

PROJECT:
Vacaville Classroom Building (Annex) Renovation Project

CONSULTANT TEAM:
EXCEL ENGINEERS
825 ORANGE AVE.
SUNNYVALE, CA 94087
Telephone: 408 - 230-9164
Fax: 408 - 749-9989

STAMP
REGISTERED PROFESSIONAL ENGINEER
YUE XU
No. 31549
EXP. 12/31/18
MECHANICAL
STATE OF CALIFORNIA

SHEET LEGEND:

ISSUE/REVISION:

NO:	DATE:	DESCRIPTION:
	04/25/2017	ISSUE FOR DD 100%
	06/06/2017	ISSUE FOR CD 50%
	06/30/2017	ISSUE FOR CD 60%
	07/20/2017	ISSUE FOR CD 100%
	10/18/2017	DSA BACKCHECK

KEY PLAN:

FILE: 48-C1
IDENTIFICATION STAMP
DIVISION OF THE STATE ARCHITECT
02-116082
AC JCC FLS GBC SS PVL
DATE: 10/31/2017

SCALE:
DATE:
PROJECT NO:
PERMIT APPLICATION NO.:

MECHANICAL TITLE 24

M0.2

HVAC SYSTEM HEATING AND COOLING LOADS SUMMARY

Project Name: SCCD Vacaville Annex Building Renovation
Date: 7/17/2017
System Name: (E) AC-1
Floor Area: 1,969

ENGINEERING CHECKS

Number of Systems	1
Heating System	
Output per System	64,000
Total Output (Btuh)	64,000
Output (Btuh/sqft)	32.5
Cooling System	
Output per System	75,000
Total Output (Btuh)	75,000
Total Output (Tons)	6.3
Total Output (Btuh/sqft)	38.1
Total Output (sqft/Ton)	315.0
Air System	
CFM per System	2,400
Airflow (cfm)	2,400
Airflow (cfm/sqft)	1.20
Airflow (cfm/Ton)	384.0
Outside Air (%)	30.8 %
Outside Air (cfm/sqft)	0.36

SYSTEM LOAD

	COIL COOLING PEAK			COIL HTG. PEAK	
	CFM	Sensible	Latent	CFM	Sensible
Total Room Loads	1,844	36,986	12,306	329	12,358
Return Vented Lighting		0			
Return Air Ducts		925			309
Return Fan		0			0
Ventilation	738	17,827	1,717	738	37,240
Supply Fan		0			0
Supply Air Ducts		925			309
TOTAL SYSTEM LOAD		56,662	14,023		50,216

HVAC EQUIPMENT SELECTION

YCD074		68,855	2,847	64,000
Total Adjusted System Output (Adjusted for Peak Design conditions)		68,855	2,847	64,000

Note: values above given at ARI conditions — TIME OF SYSTEM PEAK: Jul 4 PM — Jan 1 AM

HEATING SYSTEM PSYCHROMETRICS (Airstream Temperatures at Time of Heating Peak)

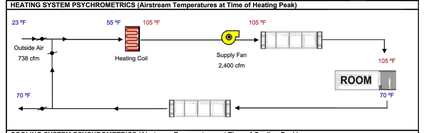

COOLING SYSTEM PSYCHROMETRICS (Airstream Temperatures at Time of Cooling Peak)

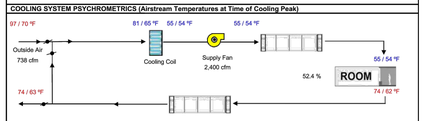

EnergyPro 7.1 by EnergySoft User Number: 6797 ID: 2017015 Page 1 of 8

HVAC SYSTEM HEATING AND COOLING LOADS SUMMARY

Project Name: SCCD Vacaville Annex Building Renovation
Date: 7/17/2017
System Name: (E) AC-2
Floor Area: 1,993

ENGINEERING CHECKS

Number of Systems	1
Heating System	
Output per System	64,000
Total Output (Btuh)	64,000
Output (Btuh/sqft)	32.1
Cooling System	
Output per System	75,000
Total Output (Btuh)	75,000
Total Output (Tons)	6.3
Total Output (Btuh/sqft)	37.6
Total Output (sqft/Ton)	318.9
Air System	
CFM per System	2,400
Airflow (cfm)	2,400
Airflow (cfm/sqft)	1.20
Airflow (cfm/Ton)	384.0
Outside Air (%)	31.1 %
Outside Air (cfm/sqft)	0.38

SYSTEM LOAD

	COIL COOLING PEAK			COIL HTG. PEAK	
	CFM	Sensible	Latent	CFM	Sensible
Total Room Loads	1,330	26,814	12,456	208	7,821
Return Vented Lighting		0			
Return Air Ducts		670			196
Return Fan		0			0
Ventilation	747	19,088	1,700	747	37,730
Supply Fan		0			0
Supply Air Ducts		670			196
TOTAL SYSTEM LOAD		47,243	14,157		45,942

HVAC EQUIPMENT SELECTION

YCD074		69,251	2,155	64,000
Total Adjusted System Output (Adjusted for Peak Design conditions)		69,251	2,155	64,000

Note: values above given at ARI conditions — TIME OF SYSTEM PEAK: Jul 3 PM — Jan 1 AM

HEATING SYSTEM PSYCHROMETRICS (Airstream Temperatures at Time of Heating Peak)

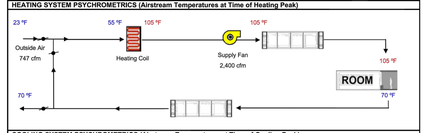

COOLING SYSTEM PSYCHROMETRICS (Airstream Temperatures at Time of Cooling Peak)

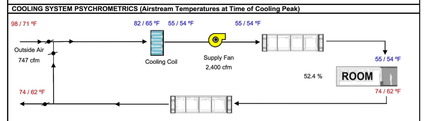

EnergyPro 7.1 by EnergySoft User Number: 6797 ID: 2017015 Page 2 of 8

HVAC SYSTEM HEATING AND COOLING LOADS SUMMARY

Project Name: SCCD Vacaville Annex Building Renovation
Date: 7/17/2017
System Name: (E) AC-3
Floor Area: 821

ENGINEERING CHECKS

Number of Systems	1
Heating System	
Output per System	51,000
Total Output (Btuh)	51,000
Output (Btuh/sqft)	62.1
Cooling System	
Output per System	36,000
Total Output (Btuh)	36,000
Total Output (Tons)	3.0
Total Output (Btuh/sqft)	43.8
Total Output (sqft/Ton)	273.7
Air System	
CFM per System	1,200
Airflow (cfm)	1,200
Airflow (cfm/sqft)	1.46
Airflow (cfm/Ton)	400.0
Outside Air (%)	25.7 %
Outside Air (cfm/sqft)	0.38

SYSTEM LOAD

	COIL COOLING PEAK			COIL HTG. PEAK	
	CFM	Sensible	Latent	CFM	Sensible
Total Room Loads	550	11,111	5,131	87	3,268
Return Vented Lighting		0			
Return Air Ducts		278			82
Return Fan		0			0
Ventilation	308	7,878	942	308	15,547
Supply Fan		0			0
Supply Air Ducts		278			82
TOTAL SYSTEM LOAD		19,544	6,073		18,978

HVAC EQUIPMENT SELECTION

YCC036		32,596	1,338	51,000
Total Adjusted System Output (Adjusted for Peak Design conditions)		32,596	1,338	51,000

Note: values above given at ARI conditions — TIME OF SYSTEM PEAK: Jul 3 PM — Jan 1 AM

HEATING SYSTEM PSYCHROMETRICS (Airstream Temperatures at Time of Heating Peak)

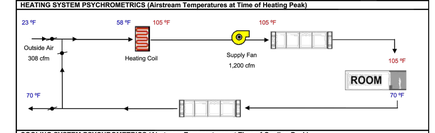

COOLING SYSTEM PSYCHROMETRICS (Airstream Temperatures at Time of Cooling Peak)

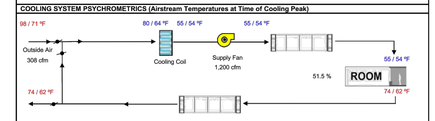

EnergyPro 7.1 by EnergySoft User Number: 6797 ID: 2017015 Page 3 of 8

HVAC SYSTEM HEATING AND COOLING LOADS SUMMARY

Project Name: SCCD Vacaville Annex Building Renovation
Date: 7/17/2017
System Name: (E) AC-4
Floor Area: 1,367

ENGINEERING CHECKS

Number of Systems	1
Heating System	
Output per System	102,500
Total Output (Btuh)	102,500
Output (Btuh/sqft)	75.0
Cooling System	
Output per System	90,000
Total Output (Btuh)	90,000
Total Output (Tons)	7.5
Total Output (Btuh/sqft)	65.8
Total Output (sqft/Ton)	182.3
Air System	
CFM per System	3,000
Airflow (cfm)	3,000
Airflow (cfm/sqft)	2.19
Airflow (cfm/Ton)	400.0
Outside Air (%)	17.1 %
Outside Air (cfm/sqft)	0.38

SYSTEM LOAD

	COIL COOLING PEAK			COIL HTG. PEAK	
	CFM	Sensible	Latent	CFM	Sensible
Total Room Loads	2,274	45,617	8,544	300	11,250
Return Vented Lighting		0			
Return Air Ducts		1,140			281
Return Fan		0			0
Ventilation	513	13,041	2,217	513	25,872
Supply Fan		0			0
Supply Air Ducts		1,140			281
TOTAL SYSTEM LOAD		60,939	10,761		37,685

HVAC EQUIPMENT SELECTION

YCD091		68,763	14,731	102,500
Total Adjusted System Output (Adjusted for Peak Design conditions)		68,763	14,731	102,500

Note: values above given at ARI conditions — TIME OF SYSTEM PEAK: Jul 3 PM — Jan 1 AM

HEATING SYSTEM PSYCHROMETRICS (Airstream Temperatures at Time of Heating Peak)

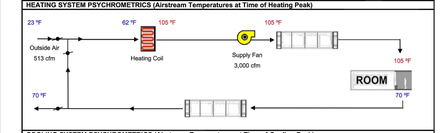

COOLING SYSTEM PSYCHROMETRICS (Airstream Temperatures at Time of Cooling Peak)

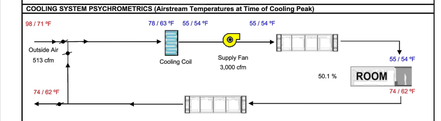

EnergyPro 7.1 by EnergySoft User Number: 6797 ID: 2017015 Page 4 of 8

HVAC SYSTEM HEATING AND COOLING LOADS SUMMARY

Project Name: SCCD Vacaville Annex Building Renovation
Date: 7/17/2017
System Name: (E) AC-5
Floor Area: 2,249

ENGINEERING CHECKS

Number of Systems	1
Heating System	
Output per System	64,000
Total Output (Btuh)	64,000
Output (Btuh/sqft)	28.5
Cooling System	
Output per System	75,000
Total Output (Btuh)	75,000
Total Output (Tons)	6.3
Total Output (Btuh/sqft)	33.3
Total Output (sqft/Ton)	359.8
Air System	
CFM per System	2,400
Airflow (cfm)	2,400
Airflow (cfm/sqft)	1.07
Airflow (cfm/Ton)	384.0
Outside Air (%)	20.7 %
Outside Air (cfm/sqft)	0.22

SYSTEM LOAD

	COIL COOLING PEAK			COIL HTG. PEAK	
	CFM	Sensible	Latent	CFM	Sensible
Total Room Loads	2,478	49,371	14,892	522	19,550
Return Vented Lighting		0			
Return Air Ducts		1,234			489
Return Fan		0			0
Ventilation	496	12,558	406	496	24,991
Supply Fan		0			0
Supply Air Ducts		1,234			489
TOTAL SYSTEM LOAD		64,397	15,297		45,519

HVAC EQUIPMENT SELECTION

YCD074		65,086	5,825	64,000
Total Adjusted System Output (Adjusted for Peak Design conditions)		65,086	5,825	64,000

Note: values above given at ARI conditions — TIME OF SYSTEM PEAK: Jul 3 PM — Jan 1 AM

HEATING SYSTEM PSYCHROMETRICS (Airstream Temperatures at Time of Heating Peak)

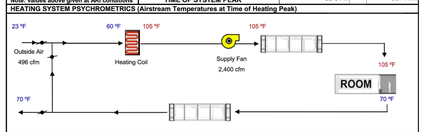

COOLING SYSTEM PSYCHROMETRICS (Airstream Temperatures at Time of Cooling Peak)

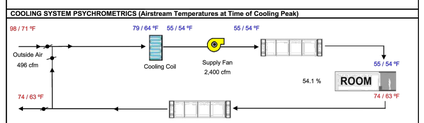

EnergyPro 7.1 by EnergySoft User Number: 6797 ID: 2017015 Page 5 of 8

HVAC SYSTEM HEATING AND COOLING LOADS SUMMARY

Project Name: SCCD Vacaville Annex Building Renovation
Date: 7/17/2017
System Name: (E) AC-6
Floor Area: 2,352

ENGINEERING CHECKS

Number of Systems	1
Heating System	
Output per System	64,000
Total Output (Btuh)	64,000
Output (Btuh/sqft)	27.2
Cooling System	
Output per System	75,000
Total Output (Btuh)	75,000
Total Output (Tons)	6.3
Total Output (Btuh/sqft)	31.9
Total Output (sqft/Ton)	376.3
Air System	
CFM per System	2,400
Airflow (cfm)	2,400
Airflow (cfm/sqft)	1.02
Airflow (cfm/Ton)	384.0
Outside Air (%)	21.5 %
Outside Air (cfm/sqft)	0.22

SYSTEM LOAD

	COIL COOLING PEAK			COIL HTG. PEAK	
	CFM	Sensible	Latent	CFM	Sensible
Total Room Loads	1,678	33,708	15,359	204	7,677
Return Vented Lighting		0			
Return Air Ducts		843			192
Return Fan		0			0
Ventilation	515	13,124	318	515	26,015
Supply Fan		0			0
Supply Air Ducts		843			192
TOTAL SYSTEM LOAD		48,518	15,677		34,076

HVAC EQUIPMENT SELECTION

YCD074		65,050	5,941	64,000
Total Adjusted System Output (Adjusted for Peak Design conditions)		65,050	5,941	64,000

Note: values above given at ARI conditions — TIME OF SYSTEM PEAK: Jul 3 PM — Jan 1 AM

HEATING SYSTEM PSYCHROMETRICS (Airstream Temperatures at Time of Heating Peak)

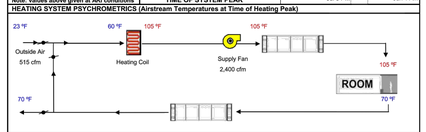

COOLING SYSTEM PSYCHROMETRICS (Airstream Temperatures at Time of Cooling Peak)

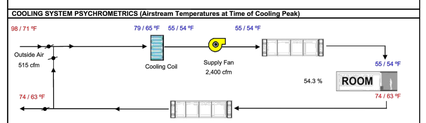

EnergyPro 7.1 by EnergySoft User Number: 6797 ID: 2017015 Page 6 of 8

HVAC SYSTEM HEATING AND COOLING LOADS SUMMARY

Project Name: SCCD Vacaville Annex Building Renovation
Date: 7/17/2017
System Name: (E) AC-7
Floor Area: 1,954

ENGINEERING CHECKS

Number of Systems	1
Heating System	
Output per System	64,000
Total Output (Btuh)	64,000
Output (Btuh/sqft)	32.8
Cooling System	
Output per System	75,000
Total Output (Btuh)	75,000
Total Output (Tons)	6.3
Total Output (Btuh/sqft)	38.4
Total Output (sqft/Ton)	312.0
Air System	
CFM per System	2,400
Airflow (cfm)	2,400
Airflow (cfm/sqft)	1.23
Airflow (cfm/Ton)	384.0
Outside Air (%)	30.5 %
Outside Air (cfm/sqft)	0.38

SYSTEM LOAD

	COIL COOLING PEAK			COIL HTG. PEAK	
	CFM	Sensible	Latent	CFM	Sensible
Total Room Loads	2,157	43,116	12,213	452	16,957
Return Vented Lighting		0			
Return Air Ducts		1,078			424
Return Fan		0			0
Ventilation	733	17,645	1,734	733	36,922
Supply Fan		0			0
Supply Air Ducts		1,078			424
TOTAL SYSTEM LOAD		62,916	13,946		54,727

HVAC EQUIPMENT SELECTION

YCD074		68,865	2,821	64,000
Total Adjusted System Output (Adjusted for Peak Design conditions)		68,865	2,821	64,000

Note: values above given at ARI conditions — TIME OF SYSTEM PEAK: Jul 4 PM — Jan 1 AM

HEATING SYSTEM PSYCHROMETRICS (Airstream Temperatures at Time of Heating Peak)

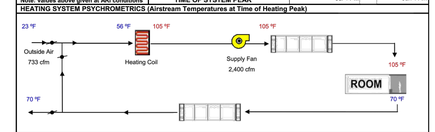

COOLING SYSTEM PSYCHROMETRICS (Airstream Temperatures at Time of Cooling Peak)

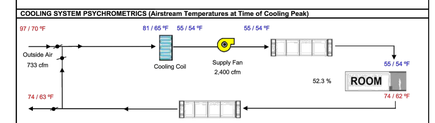

EnergyPro 7.1 by EnergySoft User Number: 6797 ID: 2017015 Page 7 of 8

HVAC SYSTEM HEATING AND COOLING LOADS SUMMARY

Project Name: SCCD Vacaville Annex Building Renovation
Date: 7/17/2017
System Name: (E) AC-8
Floor Area: 2,063

ENGINEERING CHECKS

Number of Systems	1
Heating System	
Output per System	102,500
Total Output (Btuh)	102,500
Output (Btuh/sqft)	49.7
Cooling System	
Output per System	90,000
Total Output (Btuh)	90,000
Total Output (Tons)	7.5
Total Output (Btuh/sqft)	43.6
Total Output (sqft/Ton)	275.1
Air System	
CFM per System	3,000
Airflow (cfm)	3,000
Airflow (cfm/sqft)	1.45
Airflow (cfm/Ton)	400.0
Outside Air (%)	14.2 %
Outside Air (cfm/sqft)	0.21

SYSTEM LOAD

	COIL COOLING PEAK			COIL HTG. PEAK	
	CFM	Sensible	Latent	CFM	Sensible
Total Room Loads	2,571	51,448	11,959	681	25,512
Return Vented Lighting		0			
Return Air Ducts		1,286			638
Return Fan		0			0
Ventilation	426	8,985	1,296	426	21,452
Supply Fan		0			0
Supply Air Ducts		1,286			638
TOTAL SYSTEM LOAD		63,005	13,255		48,240

HVAC EQUIPMENT SELECTION

YCD091		65,992	19,159	102,500
Total Adjusted System Output (Adjusted for Peak Design conditions)		65,992	19,159	102,500

Note: values above given at ARI conditions — TIME OF SYSTEM PEAK: Jul 5 PM — Jan 1 AM

HEATING SYSTEM PSYCHROMETRICS (Airstream Temperatures at Time of Heating Peak)

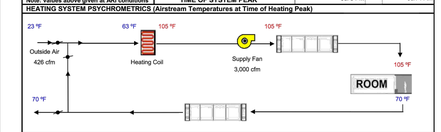

COOLING SYSTEM PSYCHROMETRICS (Airstream Temperatures at Time of Cooling Peak)

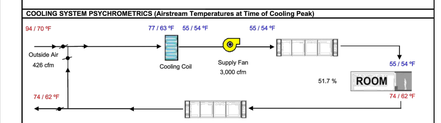

EnergyPro 7.1 by EnergySoft User Number: 6797 ID: 2017015 Page 8 of 8

OWNER:

Solano Community College District
2000 North Village Parkway
Vacaville, CA 95688

ARCHITECT:

CA ARCHITECTS
475 Gate Five Road, Suite 107
Sausalito, CA 94965
T 415.331.7655
F 415.331.7656

PROJECT:

Vacaville Classroom Building
(Annex) Renovation Project

CONSULTANT TEAM:

EXCEL ENGINEERS
825 ORANGE AVE.
SUNNYVALE, CA 94087
Telephone: 408 - 230-9164
Fax: 408 - 749-9989

STAMP

REGISTERED PROFESSIONAL ENGINEER
YUE XU
No. 31548
EXP. 12/31/18
MECHANICAL
STATE OF CALIFORNIA

SHEET LEGEND:

ISSUE/REVISION:

NO:	DATE:	DESCRIPTION:
	04/25/2017	ISSUE FOR DD 100%
	06/06/2017	ISSUE FOR CD 50%
	06/30/2017	ISSUE FOR CD 60%
	07/20/2017	ISSUE FOR CD 100%
	10/18/2017	DSA BACKCHECK

KEY PLAN:

FILE: 48-C1

IDENTIFICATION STAMP
DIVISION OF THE STATE ARCHITECT
02-116082
AC TCC FLS GBC SSPVL
DATE: 10/31/2017

SCALE:
DATE:
PROJECT NO:
PERMIT APPLICATION NO.:

HVAC LOAD CALCULATION

M0.3

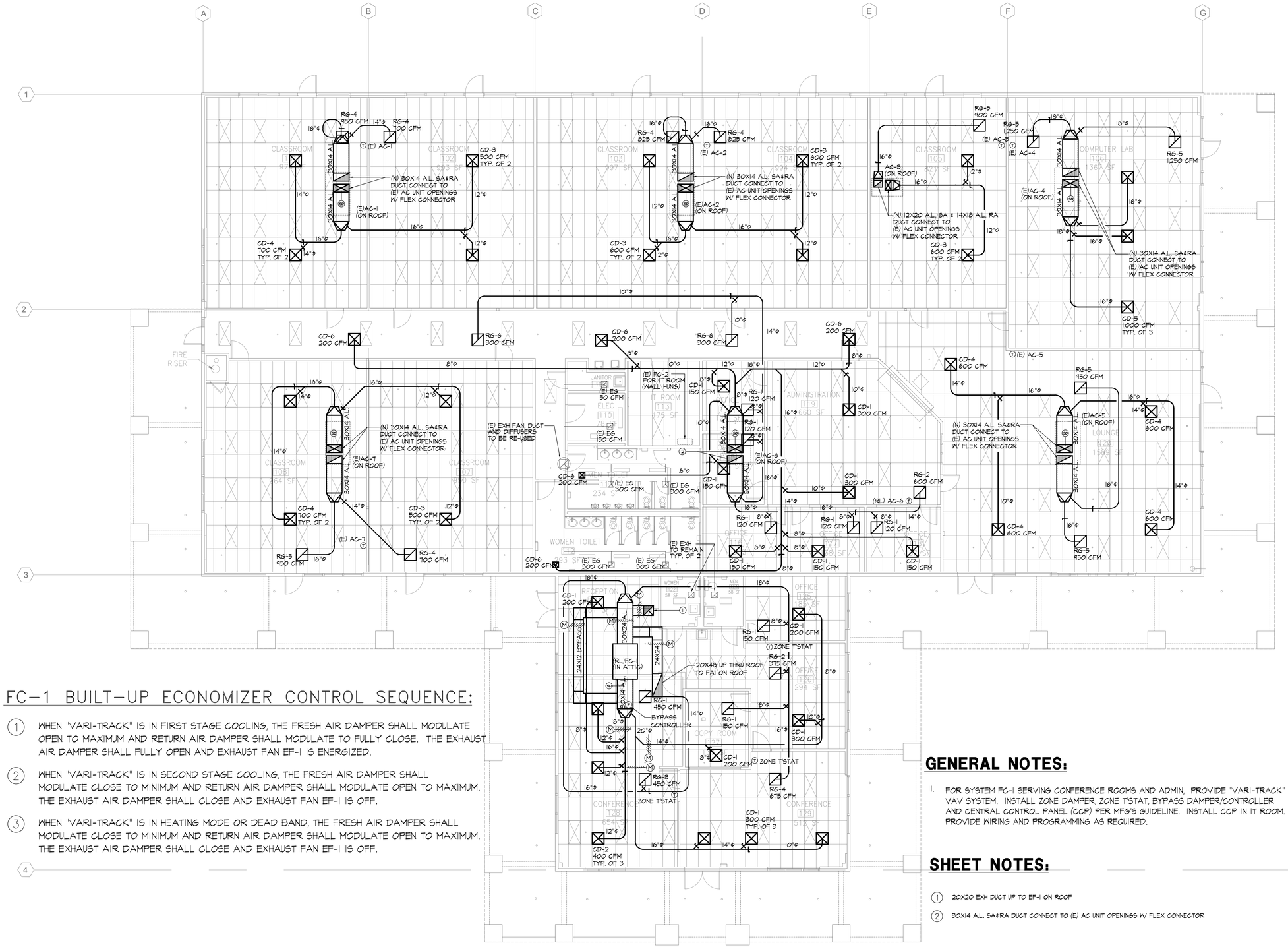

FC-1 BUILT-UP ECONOMIZER CONTROL SEQUENCE:

1. WHEN "VARI-TRACK" IS IN FIRST STAGE COOLING, THE FRESH AIR DAMPER SHALL MODULATE OPEN TO MAXIMUM AND RETURN AIR DAMPER SHALL MODULATE TO FULLY CLOSE. THE EXHAUST AIR DAMPER SHALL FULLY OPEN AND EXHAUST FAN EF-1 IS ENERGIZED.
2. WHEN "VARI-TRACK" IS IN SECOND STAGE COOLING, THE FRESH AIR DAMPER SHALL MODULATE CLOSE TO MINIMUM AND RETURN AIR DAMPER SHALL MODULATE OPEN TO MAXIMUM. THE EXHAUST AIR DAMPER SHALL CLOSE AND EXHAUST FAN EF-1 IS OFF.
3. WHEN "VARI-TRACK" IS IN HEATING MODE OR DEAD BAND, THE FRESH AIR DAMPER SHALL MODULATE CLOSE TO MINIMUM AND RETURN AIR DAMPER SHALL MODULATE OPEN TO MAXIMUM. THE EXHAUST AIR DAMPER SHALL CLOSE AND EXHAUST FAN EF-1 IS OFF.

GENERAL NOTES:

1. FOR SYSTEM FC-1 SERVING CONFERENCE ROOMS AND ADMIN, PROVIDE "VARI-TRACK" VAV SYSTEM. INSTALL ZONE DAMPER, ZONE T'STAT, BYPASS DAMPER/CONTROLLER AND CENTRAL CONTROL PANEL (CCP) PER MFG'S GUIDELINE. INSTALL CCP IN IT ROOM. PROVIDE WIRING AND PROGRAMMING AS REQUIRED.

SHEET NOTES:

1. 20X20 EXH DUCT UP TO EF-1 ON ROOF
2. 30X14 A.L. SA&RA DUCT CONNECT TO (E) AC UNIT OPENINGS W/ FLEX CONNECTOR

OWNER:

Solano Community College District
2000 North Village Parkway
Vacaville, CA 95688

ARCHITECT:

CA ARCHITECTS
475 Gate Five Road, Suite 107
Sausalito, CA 94965
T 415.331.7655
F 415.331.7656

PROJECT:

Vacaville Classroom Building (Annex) Renovation Project

CONSULTANT TEAM:

EXCEL ENGINEERS
825 ORANGE AVE.
SUNNYVALE, CA 94087
Telephone: 408 - 230-9164
Fax: 408 - 749-9989

STAMP

REGISTERED PROFESSIONAL ENGINEER
YUE XU
No. 31549
EXP. 12/31/18
MECHANICAL
STATE OF CALIFORNIA

SHEET LEGEND:

ISSUE/REVISION:

NO:	DATE:	DESCRIPTION:
	04/25/2017	ISSUE FOR DD 100%
	06/06/2017	ISSUE FOR CD 50%
	06/30/2017	ISSUE FOR CD 60%
	07/20/2017	ISSUE FOR CD 100%
	10/18/2017	DSA BACKCHECK

KEY PLAN:

FILE: 48-C1
IDENTIFICATION STAMP
DIVISION OF THE STATE ARCHITECT
02-116082
AC TCC FLS GBC SS PVL
DATE: 10/31/2017

SCALE: 1/8" = 1'-0"
DATE:
PROJECT NO:
PERMIT APPLICATION NO.:

MECHANICAL FLOOR PLAN

M2.1

GENERAL NOTES:

1. (E) AC UNIT, DUCT AND DIFFUSERS ARE SHOWN FOR REFERENCE ONLY FIELD VERIFY (E) DUCT PRIOR TO CONSTRUCTION

2. (E) T'STAT AND CONTROLS SHALL REMAIN AND BE REUSED UNLESS OTHERWISE NOTED.

DEMO NOTES:

1. (E) AC UNIT TO REMAIN AND RE-USED. REPLACE (E) AIR FILTER WITH MERV 8 FILTER REMOVE (E) SUPPLY AND RETURN AIR DUCT DROP AND CAP FOR NEW CONSTRUCTION.

2. N/A

3. REMOVE (E) DUCT, SUPPORT, VOLUME DAMPERS AND DIFFUSERS IN HATCHED AREA. (E) DUCT, PENETRATES THROUGH THE CORRIDORS MAY HAVE FIRE SMOKE DAMPERS. REMOVE FIRE SMOKE DAMPERS AND DUCT TOGETHER.

4. REMOVE (E) ABANDONED DUCT DROP FROM ROOF PLATFORM.

5. (E) SPLIT SYSTEM (CONDENSING UNIT AND FAN COIL) TO BE RE-USED. DISCONNECT POWER AND RS/RL PIPE TO REMOVE THE (E) CONDENSING UNIT FOR THE NEW ROOFING. INSTALL THE CONDENSING UNIT BACK AND RECONNECT POWER AND RS/RL PIPE. CHARGE REFRIGERANT PER MANUFACTURER'S GUIDELINE.

6. (E) FAN COIL UNIT TO BE RE-USED. RELOCATE THE UNIT TO MAKE ROOM FOR THE FIELD BUILT-UP MIXING PLENUM INCLUDING FRESH AIR DUCT, EXHAUST AIR DUCT AND MOTORIZED DAMPERS. SEE M2.1 FOR NEW LOCATION. EXTEND POWER, CONDENSATE AND RS/RL PIPE TO THE NEW LOCATION.

OWNER:

Solano Community College District
2000 North Village Parkway
Vacaville, CA 95688

ARCHITECT:

CA ARCHITECTS
475 Gate Five Road, Suite 107
Sausalito, CA 94965
T 415.331.7655
F 415.331.7656

PROJECT:

Vacaville Classroom Building (Annex) Renovation Project

CONSULTANT TEAM:

EXCEL ENGINEERS

825 ORANGE AVE.
SUNNYVALE, CA 94087
Telephone: 408 - 230-9164
Fax: 408 - 749-9989

STAMP

REGISTERED PROFESSIONAL ENGINEER
YUE XU
No. 31549
EXP. 12/31/18
MECHANICAL
STATE OF CALIFORNIA

SHEET LEGEND:

ISSUE/REVISION:

NO:	DATE:	DESCRIPTION:
	04/25/2017	ISSUE FOR DD 100%
	06/06/2017	ISSUE FOR CD 50%
	06/30/2017	ISSUE FOR CD 60%
	07/20/2017	ISSUE FOR CD 100%
	10/18/2017	DSA BACKCHECK

KEY PLAN:

FILE: 48-C1
IDENTIFICATION STAMP
DIVISION OF THE STATE ARCHITECT
02-116082
AC TCC FLS GBC SS PVL
DATE: 10/31/2017

SCALE: 1/8" = 1'-0"
DATE:
PROJECT NO:
PERMIT APPLICATION NO.:

MECHANICAL DEMO FLOOR PLAN

M2.1D

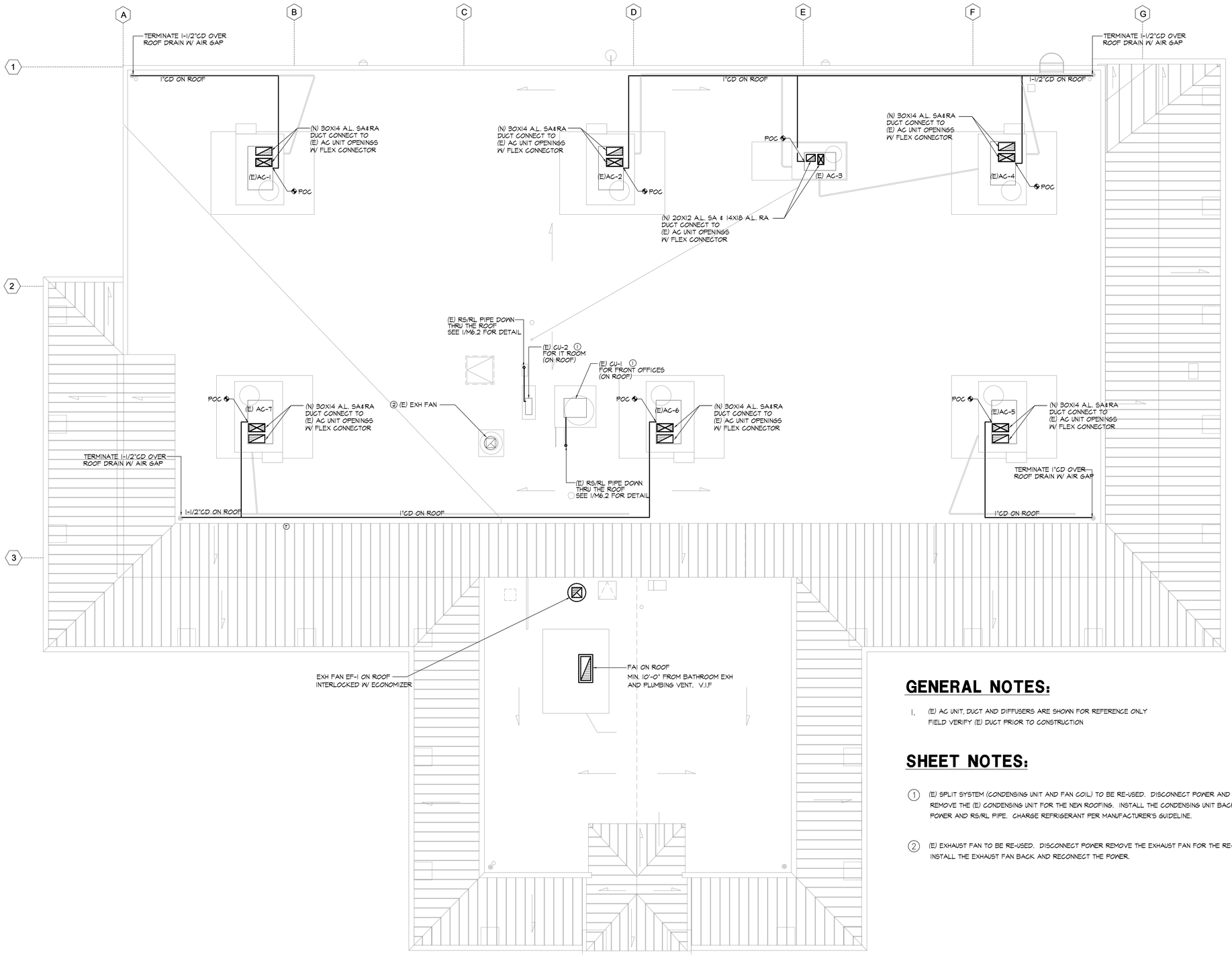

GENERAL NOTES:

1. (E) AC UNIT, DUCT AND DIFFUSERS ARE SHOWN FOR REFERENCE ONLY FIELD VERIFY (E) DUCT PRIOR TO CONSTRUCTION

SHEET NOTES:

1. (E) SPLIT SYSTEM (CONDENSING UNIT AND FAN COIL) TO BE RE-USED. DISCONNECT POWER AND RS/RL PIPE TO REMOVE THE (E) CONDENSING UNIT FOR THE NEW ROOFING. INSTALL THE CONDENSING UNIT BACK AND RECONNECT POWER AND RS/RL PIPE. CHARGE REFRIGERANT PER MANUFACTURER'S GUIDELINE.

2. (E) EXHAUST FAN TO BE RE-USED. DISCONNECT POWER REMOVE THE EXHAUST FAN FOR THE RE-ROOFING. INSTALL THE EXHAUST FAN BACK AND RECONNECT THE POWER.

OWNER:

Solano Community College District
2000 North Village Parkway
Vacaville, CA 95688

ARCHITECT:

CA ARCHITECTS
475 Gate Five Road, Suite 107
Sausalito, CA 94965
T 415.331.7655
F 415.331.7656

PROJECT:

Vacaville Classroom Building (Annex) Renovation Project

CONSULTANT TEAM:

EXCEL ENGINEERS

825 ORANGE AVE.
SUNNYVALE, CA 94087
Telephone: 408 - 230-9164
Fax: 408 - 749-9989

STAMP

REGISTERED PROFESSIONAL ENGINEER
YUE XU
No. 31548
EXP. 12/31/18
MECHANICAL
STATE OF CALIFORNIA

SHEET LEGEND:

ISSUE/REVISION:

NO:	DATE:	DESCRIPTION:
	04/25/2017	ISSUE FOR DD 100%
	06/06/2017	ISSUE FOR CD 50%
	06/30/2017	ISSUE FOR CD 60%
	07/20/2017	ISSUE FOR CD 100%
	10/18/2017	DSA BACKCHECK

KEY PLAN:

FILE: 48-C1
IDENTIFICATION STAMP
DIVISION OF THE STATE ARCHITECT
02-116082
AC ICC FLS GBC SS PVL
DATE: 10/31/2017

SCALE: 1/8" = 1'-0"
DATE:
PROJECT NO:
PERMIT APPLICATION NO.:

MECHANICAL ROOF PLAN

M2.2

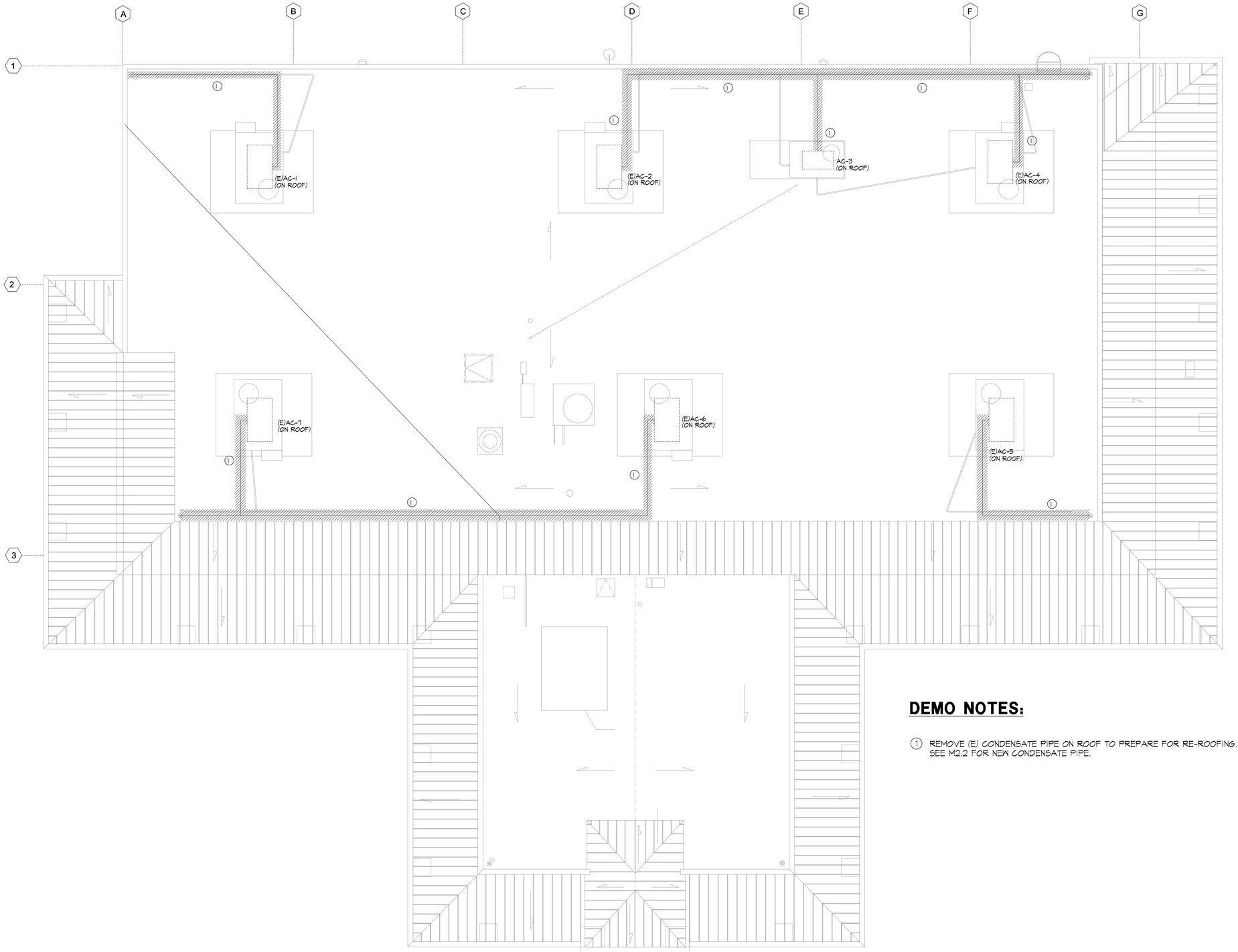

DEMO NOTES:

1. REMOVE (E) CONDENSATE PIPE ON ROOF TO PREPARE FOR RE-ROOFING. SEE M2.2 FOR NEW CONDENSATE PIPE.

OWNER:

Solano Community College District
2000 North Village Parkway
Vacaville, CA 95688

ARCHITECT:

CA ARCHITECTS
475 Gate Five Road, Suite 107
Sausalito, CA 94965
T 415.331.7655
F 415.331.7656

PROJECT:

Vacaville Classroom Building
(Annex) Renovation Project

CONSULTANT TEAM:

EXCEL ENGINEERS

825 ORANGE AVE.
SUNNYVALE, CA 94087
Telephone: 408 - 230-9164
Fax: 408 - 749-9989

STAMP

REGISTERED PROFESSIONAL ENGINEER
YUE XU
No. 31548
EXP. 12/31/18
MECHANICAL
STATE OF CALIFORNIA

SHEET LEGEND:

ISSUE/REVISION:

NO:	DATE:	DESCRIPTION:
	04/25/2017	ISSUE FOR DD 100%
	06/06/2017	ISSUE FOR CD 50%
	06/30/2017	ISSUE FOR CD 60%
	07/20/2017	ISSUE FOR CD 100%
	10/18/2017	DSA BACKCHECK

KEY PLAN:

FILE: 48-C1
IDENTIFICATION STAMP
DIVISION OF THE STATE ARCHITECT
02-116082
AC ICC FLS GBC SS PVL
DATE: 10/31/2017

SCALE: 1/8" = 1'-0"
DATE:
PROJECT NO:
PERMIT APPLICATION NO.:

MECHANICAL DEMO ROOF PLAN

M2.2D

(E) ROOFTOP UNIT SCHEDULE

MARK	MFG & MODEL No "TRANE"	HEATING PERFORMANCE		COOLING PERFORMANCE- ARI		FAN PERFORMANCE				ELECTRICAL DATA			WEIGHT (LBS)	COMMENTS
		HEATING INPUT (MBH)	HEATING OUTPUT (MBH)	COOLING OUTPUT (MBH) SENSIBLE / TOTAL	COOLING EFFICIENCY EER / SEER	CFM	E.S.P. (IN. WG.)	RPM	BHP	NOM. VOLTAGE V-PH-HZ	MCA	MOCP		
(E)AC-1	YHD074 6TON UNIT	-	-	-	-	2,400	-		-	-	-	-	-	1 2 4
(E)AC-2	YHD074 6TON UNIT	-	-	-	-	2,400	-		-	-	-	-	-	1 2 4
(E)AC-3	YCC036 3TON UNIT	-	-	-	-	1,200	-		-	-	-	-	-	1 3
(E)AC-4	YCD091 7-1/2TON UNIT	-	-	-	-	3,000	-		-	-	-	-	-	1 4 5
(E)AC-5	YHD074 6TON UNIT	-	-	-	-	2,400	-		-	-	-	-	-	1 4 5
(E)AC-6	YHD074 6TON UNIT	-	-	-	-	2,400	-		-	-	-	-	-	1 4 5
(E)AC-7	YHD074 6TON UNIT	-	-	-	-	2,400	-		-	-	-	-	-	1 2 4

NOTES: 1 REPLACE EXISTING AIR FILTER WITH MERV 8 AIR FILTER 2 BALANCE MIN. OSA TO 750CFM
3 BALANCE MIN. OSA TO 300CFM 4 PROVIDE SMOKE DETECTOR IN SUPPLY DUCT FOR FAN SHUTDOWN 5 BALANCE MIN. OSA TO 500CFM

(E) FAN COIL UNIT SCHEDULE

MARK	MANUFACTURER & MODEL No.	HEATING PERFORMANCE		COOLING PERFORMANCE- ARI		FAN PERFORMANCE				ELECTRICAL DATA			WEIGHT (LBS)	COMMENTS
		HEATING INPUT (MBH)	HEATING OUTPUT (MBH)	COOLING OUTPUT (MBH) SENSIBLE / TOTAL	COOLING EFFICIENCY EER / SEER	CFM	E.S.P. (IN. WG.)	RPM	HP	NOM. VOLTAGE V-PH-HZ	MCA (AMP)	MOCP (AMP)		
(E)FC-1	"CARRIER" 7-1/2TON	-	-	-	-	3,000	-	-	-	-	-	-	-	1 2
(E)FC-2	"MITSUBISHI" 2TON	-	-	-	-	700	-	-	-	-	-	-	-	1 IT ROOM UNIT

NOTES: 1 REPLACE EXISTING AIR FILTER WITH MERV 8 AIR FILTER 2 BALANCE MIN. OSA TO 500CFM

DIFFUSER, GRILLE AND REGISTER SCHEDULE

MARK	MANUFACTURER	MODEL	FACE SIZE	NECK SIZE	SERVICE	REMARKS
CD-1	TITUS	MCD	24"X24"	8"X8"	SUPPLY	LAY-IN
CD-2	TITUS	MCD	24"X24"	10"X10"	SUPPLY	LAY-IN
CD-3	TITUS	MCD	24"X24"	14"X14"	SUPPLY	LAY-IN
CD-4	TITUS	MCD	24"X24"	16"X16"	SUPPLY	LAY-IN
CD-5	TITUS	MCD	24"X24"	18"X18"	SUPPLY	LAY-IN
CD-6	TITUS	MCD	-	12"X12"	SUPPLY	SURFACE MOUNT
RG-1	TITUS	PAR	24"X24"	10"ø	RETURN	LAY-IN
RG-2	TITUS	PAR	24"X24"	12"ø	RETURN	LAY-IN
RG-3	TITUS	PAR	24"X24"	16"ø	RETURN	LAY-IN
RG-4	TITUS	PAR	24"X24"	18"X18"	RETURN	LAY-IN
RG-5	TITUS	PAR	24"X24"	22"X22"	RETURN	LAY-IN
RG-6	TITUS	50F	-	12"X12"	RETURN	SURFACE MOUNT

NOTES: PROVIDE TRANSITION AS REQUIRED CONNECTING TO THE DIFFUSERS.

(E) CONDENSING UNIT SCHEDULE

MARK	MFGR. MODEL NO.	ARI PERFORMANCE WITH LISTED COIL		SOUND RATING		ELECTRICAL DATA				WEIGHT LBS	SERVICE	REMARKS
		TOTAL CAP. (MBH)	SEER	BELS	FREE FIELD dBA	V/PH/HZ	POWER MCA	MOCP	FLA			
(E)CU-1	"CARRIER" 38AQS008 7-1/2TON	-	-	-	-	-	-	-	-	-	(E)FC-1	
(E)CU-2	"MITSUBISHI" MUZ-GL24 2TON	-	-	-	-	-	-	-	-	-	(E)FC-2	

(N) EXHAUST FAN SCHEDULE

MARK	MANUFACTURER & MODEL NO. "GREENHECK"	FAN				MOTOR		CONTROLS BY	OPERATING WEIGHT LBS	REMARKS
		CFM	SP	RPM	SONES	HP	ELECTRICAL POWER			
EF-1	G-183-VG	3,000	0.5	930	-	3/4HP	115/1/60	1	200	2

NOTES:
1 INTERLOCKED W/ FC-1 ECONOMIZER 2 W/ PRE-FAB CURB, BACKDRAFT DAMPER & BIRD SCREEN

(N) GRAVITY AIR INTAKE

MARK	MANUFACTURER & MODEL NO. "GREENHECK"	CFM	SP	OPERATING WEIGHT LBS	REMARKS
GAI	FGI 20X48	3,000	0.05	200	1

NOTES:
1 W/ PRE-FAB CURB, BACKDRAFT DAMPER & BIRD SCREEN

OWNER:

Solano Community College District
2000 North Village Parkway
Vacaville, CA 95688

ARCHITECT:

CA ARCHITECTS
475 Gate Five Road, Suite 107
Sausalito, CA 94965
T 415.331.7655
F 415.331.7656

PROJECT:

Vacaville Classroom Building
(Annex) Renovation Project

CONSULTANT TEAM:

EXCEL ENGINEERS
825 ORANGE AVE.
SUNNYVALE, CA 94087
Telephone: 408 - 230-9164
Fax: 408 - 749-9989

STAMP

REGISTERED PROFESSIONAL ENGINEER
YUE XU
No. 31548
EXP. 12/31/18
MECHANICAL
STATE OF CALIFORNIA

SHEET LEGEND:

ISSUE/REVISION:

NO:	DATE:	DESCRIPTION:
	04/25/2017	ISSUE FOR DD 100%
	06/06/2017	ISSUE FOR CD 50%
	06/30/2017	ISSUE FOR CD 60%
	07/20/2017	ISSUE FOR CD 100%
	10/18/2017	DSA BACKCHECK

KEY PLAN:

FILE: 48-C1
IDENTIFICATION STAMP
DIVISION OF THE STATE ARCHITECT
02-116082
AC TCC FLS GBC SS PVL
DATE: 10/31/2017

SCALE:
DATE:
PROJECT NO:
PERMIT APPLICATION NO.:

MECHANICAL SCHEDULE

M4.1

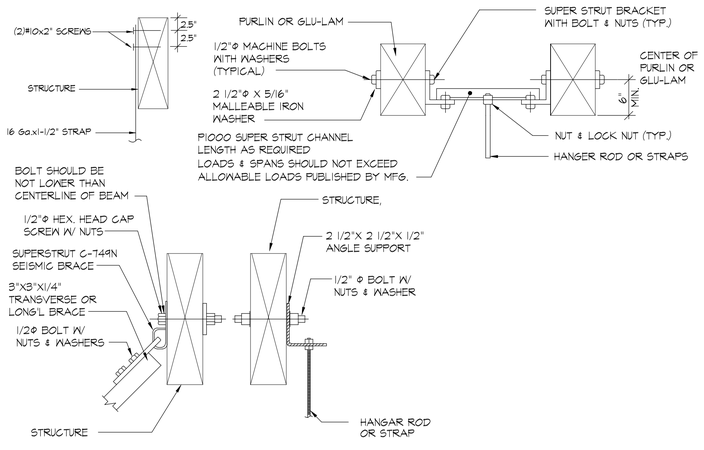

1 M6.1 **ATTACHMENT DETAIL**

NOT TO SCALE

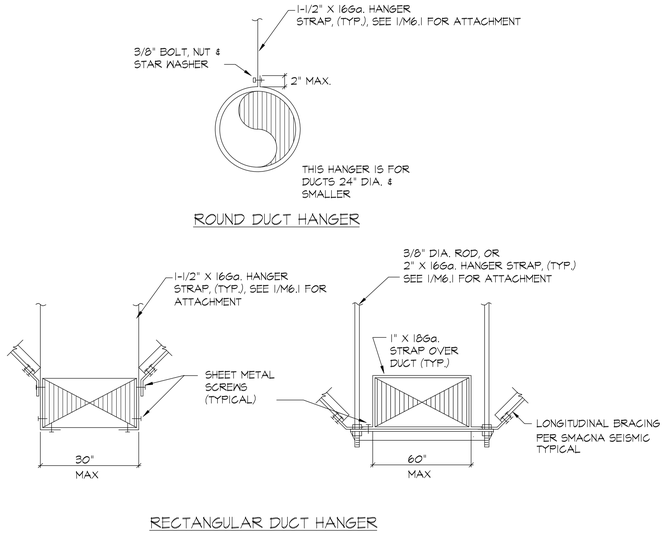

NOTES:

PROVIDE SWAY & SEISMIC BRACING PER SMACNA SEISMIC GUIDELINES.

2 M6.1 **DUCT HANGER SUPPORT DETAIL**

SCALE: NONE

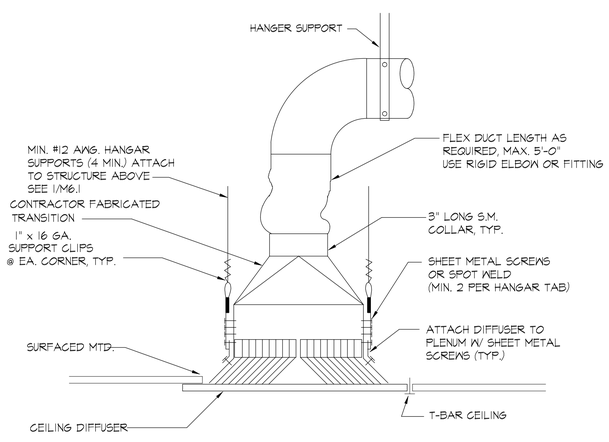

3 M6.1 **DIFFUSER INSTALLATION DETAIL**

NOT TO SCALE

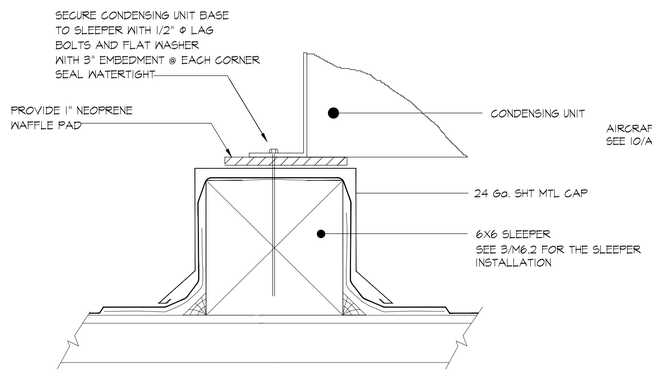

4 M6.1 **CONDENSING UNIT INSTALLATION DETAIL**

SCALE: NONE

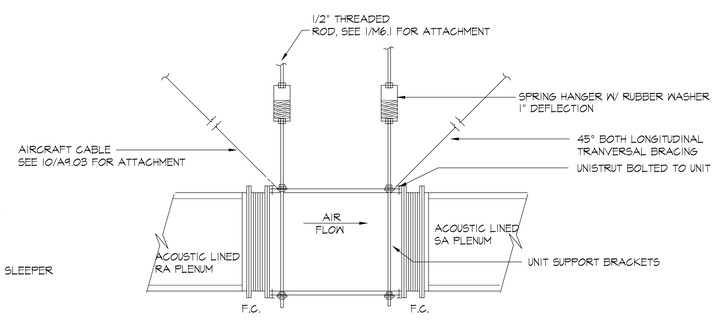

5 M6.1 **FAN COIL INSTALLATION DETAIL**

SCALE: IGNONE

OWNER:

Solano Community College District
2000 North Village Parkway
Vacaville, CA 95688

ARCHITECT:

CA ARCHITECTS
475 Gate Five Road, Suite 107
Sausalito, CA 94965
T 415.331.7655
F 415.331.7656

PROJECT:

Vacaville Classroom Building (Annex) Renovation Project

CONSULTANT TEAM:

EXCEL ENGINEERS

825 ORANGE AVE.
SUNNYVALE, CA 94087
Telephone: 408 - 230-9164
Fax: 408 - 749-9989

STAMP

SHEET LEGEND:

ISSUE/REVISION:

NO:	DATE:	DESCRIPTION:
	04/25/2017	ISSUE FOR DD 100%
	06/06/2017	ISSUE FOR CD 50%
	06/30/2017	ISSUE FOR CD 60%
	07/20/2017	ISSUE FOR CD 100%
	10/18/2017	DSA BACKCHECK

KEY PLAN:

FILE: 48-C1
IDENTIFICATION STAMP
DIVISION OF THE STATE ARCHITECT
02-116082
AC ICC FLS GBC SS PVL
DATE: 10/31/2017

SCALE:
DATE:
PROJECT NO:
PERMIT APPLICATION NO.:

MECHANICAL DETAILS

M6.1

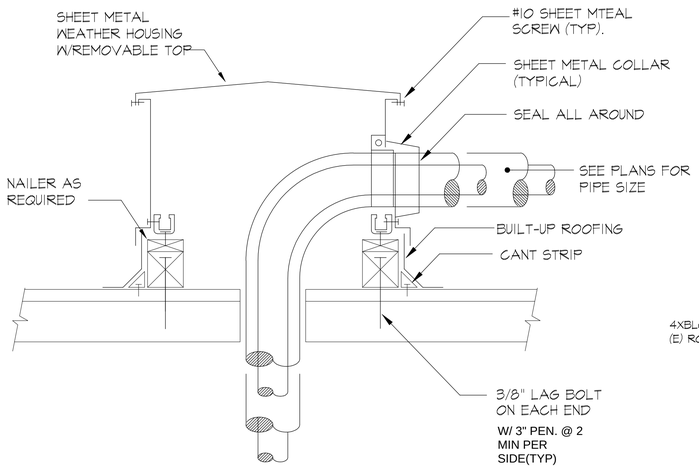

1 **RS/RL PIPE THRU ROOF DETAIL**

M6.2 NOT TO SCALE

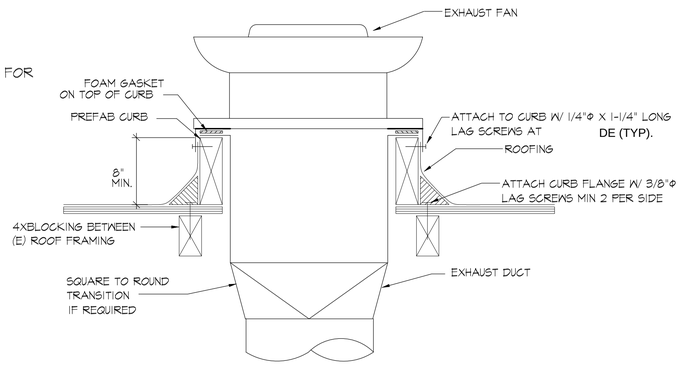

2 **EXH FAN MOUNTING DETAIL**

M6.2 NOT TO SCALE FAI INSTALLATION SIMILAR

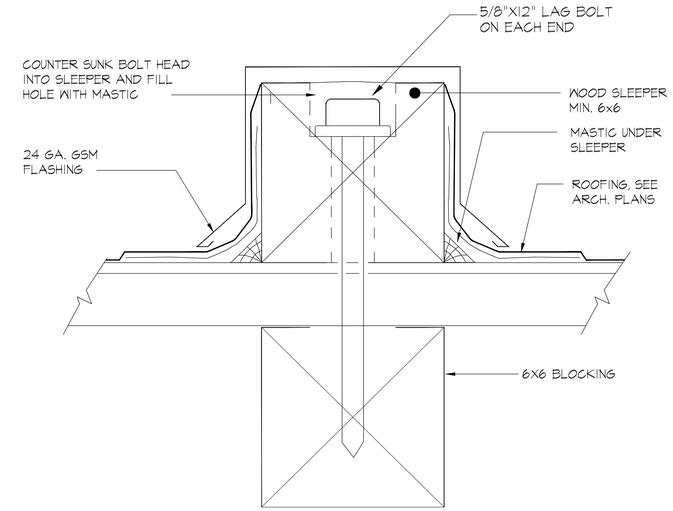

3 **SLEEPER MOUNTING DETAIL**

M6.2 NOT TO SCALE TYP. FOR GAS PIPE AND CONDENSING UNIT

OWNER:

Solano Community College District
2000 North Village Parkway
Vacaville, CA 95688

ARCHITECT:

CA ARCHITECTS
475 Gate Five Road, Suite 107
Sausalito, CA 94965
T 415.331.7655
F 415.331.7656

PROJECT:

Vacaville Classroom Building
(Annex) Renovation Project

CONSULTANT TEAM:

EXCEL ENGINEERS

825 ORANGE AVE.
SUNNYVALE, CA 94087
Telephone: 408 - 230-9164
Fax: 408 - 749-9989

STAMP

REGISTERED PROFESSIONAL ENGINEER
YUE XU
No. 31549
EXP. 12/31/18
MECHANICAL
STATE OF CALIFORNIA

SHEET LEGEND:

ISSUE/REVISION:

NO:	DATE:	DESCRIPTION:
	04/25/2017	ISSUE FOR DD 100%
	06/06/2017	ISSUE FOR CD 50%
	06/30/2017	ISSUE FOR CD 60%
	07/20/2017	ISSUE FOR CD 100%
	10/18/2017	DSA BACKCHECK

KEY PLAN:

FILE: 48-C1
IDENTIFICATION STAMP
DIVISION OF THE STATE ARCHITECT
02-116082
AC ICC FLS GBC SS PVL
DATE: 10/31/2017

SCALE:
DATE:
PROJECT NO:
PERMIT APPLICATION NO.:

MECHANICAL DETAILS

M6.2

PLUMBING SYMBOLS AND ABBREVIATIONS

AFF	ABOVE FINISH FLOOR
BFP	BACKFLOW PREVENTER ASSEMBLY
COTG	CLEAN OUT TO GRADE
CW	COLD WATER
(E)	EXISTING
EWH	ELECTRIC WATER HEATER
FU	FIXTURE UNIT
FCO	FLOOR CLEANOUT
FD	FLOOR DRAIN
FS	FLOOR SINK
G	GAS
GWH	GAS WATER HEATER
GT	GREASE TRAP
HW	HOT WATER
KS	KITCHEN SINK
LAV	LAVATORY
MV	MIXING VALVE
(N)	NEW
POC	POINT OF CONNECTION
SA	SHOCK ARRESTOR
SK	SINK
SOV	SHUT-OFF VALVE
SS	SANITARY SEWER
TP	TRAP PRIMER
(TYP)	TYPICAL
UR	URINAL
V(T)R	VENT (THRU) ROOF
W	SANITARY WASTE
WC	WATER CLOSET
WCO	WALL CLEAN OUT

G	GAS
	VENT PIPING
	COLD WATER LINE
	HOT WATER LINE
	SANITARY SEWER
	CLEAN OUT TO GRADE
	PIPE DOWN
	PIPE UP
	PIPE DROP
	GATE VALVE
	TEMPERATURE & PRESSURE RELIEF VALVE
	FLOOR DRAIN
	WATER METER
	SHUT-OFF VALVE IN "CHRISTY" CONCRETE BOX.
	EWH - ELECTRIC WATER HEATER
	(E) WORK TO BE REMOVED
	PLUG OR CAP
	WALL CLEANOUT
	POINT OF CONNECTION (POC)

FIXTURE UNIT SCHEDULE : DCW

MARK	QTY	F.U.	TOTAL FUs
(E) WC FLUSH VALVE	8	-	145.0
(E) WC (TANK)	2	-	5.0
(E) LAV	8	1.0	8.0
(N) SK	1	2.0	2.0
(E) MOP SINK	1	3.0	3.0
(E) UR	4	-	53.0
(E) DF	2	-	2.0

TOTALS	24	-	218

BULDING EXTERNAL PRESSURE LOSS

MIN. PSI

(E) WATER METER	___ PSI
(E) BACK FLOW PREVENTER	___ PSI
(E) RESSURE REDUCING VALVE	___ PSI
PRESSURE AVAILABLE AT BUILDING ENTRANCE	60 PSI

BUILDING INTERNAL PRESSURE LOSS

BUILDING STATIC PRESSURE HEIGTH

___ HEIGHT X 0.434 = ___ PSI

PRESSURE REQUIRED AT FIXTURE:

FLUSH VALVE: 25 PSI

FLUSH TANK: - PSI

BUILDING TOTAL LOSS: 35 PSI

AVAILABLE PRESSURE FOR FRICTION LOSS

TOTAL LENGTH 400 FT X F 1.2 = TOTAL EQUILVALENT LENGTH (T.E.L.) 480 FT

35 PSI X 100 FT ÷ 480 T.E.L. = 7.3 PSI

USE 7 PSI LOSS PER 100 FT

(CHART A 105.1, CPC-2016) - 2" CW SUPPLY SIZE REQUIRED
2"CW SUPPLY DESIGNED

FIXTURE AND EQUIPMENT SCHEDULE

MARK	FIXTURE / EQUIPMENT	MODEL NO.	CW	HW	W	VENT	TRIM / ACCDESSORIES	REMARKS
WC	WATER CLOSET	-	1-1/4"		4"	2"		EXISTING
DF	DRINKING FOUNTAIN	-	1/2"		2"	1-1/2"		EXISTING
SK	SINK ACCESSIBLE	"JUST" SL-ADA-1921-A-GR	1/2"	1/2"	2"	1-1/2"	"CHICAGO FAUCETS" 786-E2805-5ABCP, 0.5 GPM	
RD	ROOF DRAIN	"ZURN" Z-100-IC			4"		DURA-COATED CAST IRON BODY WITH COMBINATION MEMBRANE FLASHING CLAMP/GRAVEL GUARD AND LOW SILHOUETTE POLYDOME	
OD	OVERFLOW DRAIN	"ZURN" Z-100-IC			4"		DURA-COATED CAST IRON BODY WITH COMBINATION MEMBRANE FLASHING CLAMP/GRAVEL GUARD AND LOW SILHOUETTE POLYDOME PROVIDE OVERFLOW DRAIN WITH 2" WATER DAM COLLAR	

GENERAL NOTES

1. ALL NEW CONSTRUCTION SHALL CONFORM TO APPLICABLE CODES, STANDARDS AND REQUIREMENTS.
2. THE CONTRACTOR, PRIOR TO BIDDING, SHALL VISIT THE JOB SITE TO BECOME ACQUAINTED WITH THE EXISTING INSTALLATION AND SYSTEMS RELATED TO HIS WORK, AND SHALL INCLUDE IN THE BID PROPOSAL ALL LABOR AND MATERIALS REQUIRED FOR THE INSTALLATION TO BE COMPLETE AND OPERATIVE.
3. EXTREME CAUTION SHALL BE USED IN LOCATING (E) UNDERGROUND UTILITIES ANY UTILITIE AND EQUIPMENT DAMAGED BY CONTRACTOR DURING CONSTRUCTION, SHALL BE IMMEDIATELY REPAIRED BY THE CONTRACTOR TO ORIGINAL OR BETTER CONDITION AT NO INCREASE TO CONTRACT AMOUNT.
4. THE CONTRACTOR SHALL COORDINATE PIPE ROUTING AND DROPS WITH OTHER TRADES PRIOR TO START OF WORK.
5. ELECTRONICALLY LOCATE (E) UNDERGROUND LINES PRIOR TO START OF WORK AND "POTHOLE" TO DISCOVER AND VERIFY EXACT LOCATIONS PRIOR TO TRENCHING.
6. IT SHALL BE THE CONTRACTOR'S RESPONSIBILITY TO NOTIFY THE ENGINEER UPON DISCOVERY OF ANY FIELD CONFLICTS.
7. PIPES SHALL BE SUPPORTED AND BRACED PER SMACNA GUIDELINES FOR SEISMIC RESTRAINTS OF PLUMBING SYSTEM.
8. CONTRACTOR SHALL COORDINATE WITH ALL OTHER TRADES PRIOR TO INSTALLATION OF PIPING IN CEILING SPACE FOR POSSIBLE INTERFERENCE WITH DUCTWORK, LIGHTING FIXTURES, CONDUITS CABLE TRAYS ETC.
9. DRAWINGS ARE DIAGRAMMATIC AND EXISTING CONDITIONS SHALL BE FIELD VERIFIED FOR EXACT LOCATION, SIZES AND INVERT ELEVATION OF EXISTING UTILITIES, THE PROPOSED POINT OF CONNECTIONS TO EXISTING SYSTEMS AND NEW ROUTINGS.
10. PROVIDE PERMANENT IDENTIFICATION SIGN ON THE LID OF ALL ABANDONED SHUT-OFF VALVE CONCRETE BOXES. PROVIDE PERMANENT IDENTIFICATION SIGN ("GAS" OR "WATER") ON THE LID OF ALL NEW INSTALLED SHUT-OFF VALVE CONCRETE BOXES.
11. PLUMBING SYSTEM SHALL BE INSTALLED IN A MANNER CONFORMING TO 2016 CPC CODE AND THE MANUFACTURER'S RECOMMENDATIONS.
12. PLUMBING PIPE MATERIAL SHALL FOLLOW CPC 2016 AND FOLLOWS UNLESS OTHERWISE NOTED:

    COLD/HOT WATER PIPE ABOVE GRADE - TYPE L COPPER, 95/5 SOLDERED
    SEWER/VENT PIPE BELOW OR ABOVE GRADE - HUBLESS CAST IRON W/ SLEEVE-CLAMPED JOINTS
    GAS PIPE ABOVE GRADE - SCHEDULE 40 BLACK STEEL W/ THREADED FITTING, OR GALVANIZED WHERE EXPOSED TO WEATHER.
13. PRESSURE TEST PLUMBING SYSTEM AS FOLLOWING:
    WATER PIPE - 100 PSI W/ WATER, 4 HOURS
    DRAINAGE AND VENT PIPE - 10 FT. WATER, 4 HOURS
    GAS PIPE - 10 PSI W/ AIR, 24 HOURS

PLUMBING SCOPE OF WORK

THE PLUMBING SCOPE OF WORK UNDER THIS APPLICATION IS TO REMOVE AND RE-INSTALL PLUMBING FIXTURES FOR ADA OR STRUCTURAL REQUIREMENT.

DRAWING INDEX

P0.1	PLUMBING NOTES, SYMBOL, LEGEND AND SCHEDULE
P2.1	PLUMBING FLOOR PLAN
P2.1D	PLUMBING DEMO FLOOR PLAN
P2.2D	PLUMBING DEMO ROOF PLAN
P4.1	ENLARGED PLUMBING FLOOR PLAN
P6.1	PLUMBING DETAILS

OWNER:

Solano Community College District
2000 North Village Parkway
Vacaville, CA 95688

ARCHITECT:

CA ARCHITECTS
475 Gate Five Road, Suite 107
Sausalito, CA 94965
T 415.331.7655
F 415.331.7656

PROJECT:

Vacaville Classroom Building (Annex) Renovation Project

CONSULTANT TEAM:

EXCEL ENGINEERS

825 ORANGE AVE.
SUNNYVALE, CA 94087
Telephone: 408 - 230-9164
Fax: 408 - 749-9989

STAMP

REGISTERED PROFESSIONAL ENGINEER
YUE XU
No. 31548
EXP. 12/31/18
MECHANICAL
STATE OF CALIFORNIA

SHEET LEGEND:

ISSUE/REVISION:

NO:	DATE:	DESCRIPTION:
	04/25/2017	ISSUE FOR DD 100%
	06/06/2017	ISSUE FOR CD 50%
	06/30/2017	ISSUE FOR CD 60%
	07/20/2017	ISSUE FOR CD 100%
	10/18/2017	DSA BACKCHECK

KEY PLAN:

FILE: 48-C1

IDENTIFICATION STAMP
DIVISION OF THE STATE ARCHITECT

02-116082

AC TCC FLS GBC SS PVL

DATE: 10/31/2017

SCALE:
DATE:
PROJECT NO:
PERMIT APPLICATION NO.:

PLUMBING NOTES, SYMBOL, LEGEND AND SCHEDULE

P0.1

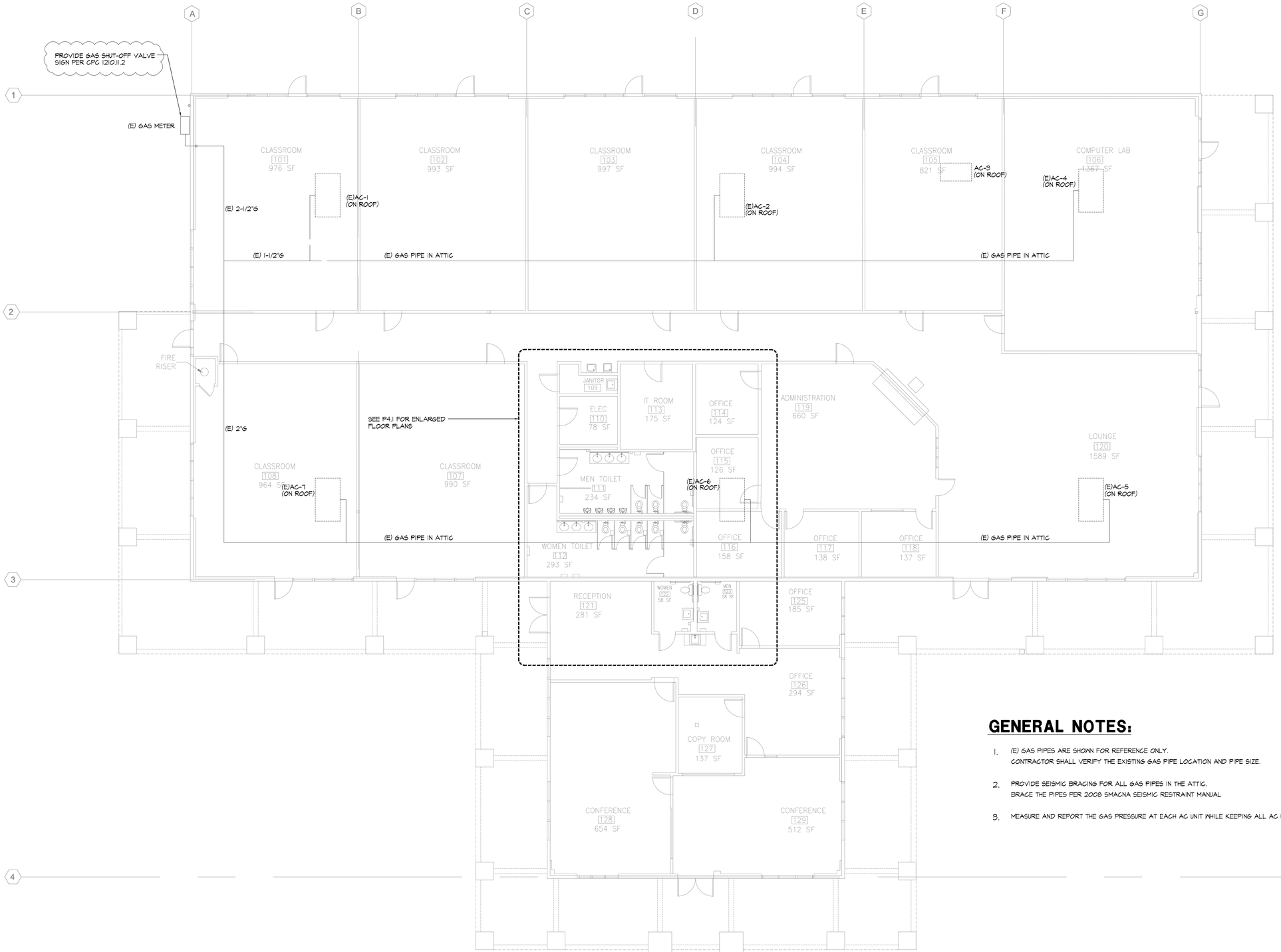

GENERAL NOTES:

1. (E) GAS PIPES ARE SHOWN FOR REFERENCE ONLY.
   CONTRACTOR SHALL VERIFY THE EXISTING GAS PIPE LOCATION AND PIPE SIZE.
2. PROVIDE SEISMIC BRACING FOR ALL GAS PIPES IN THE ATTIC.
   BRACE THE PIPES PER 2008 SMACNA SEISMIC RESTRAINT MANUAL
3. MEASURE AND REPORT THE GAS PRESSURE AT EACH AC UNIT WHILE KEEPING ALL AC UNITS ON HEATING MODE.

OWNER:

Solano Community College District
2000 North Village Parkway
Vacaville, CA 95688

ARCHITECT:

CA ARCHITECTS
475 Gate Five Road, Suite 107
Sausalito, CA 94965
T 415.331.7655
F 415.331.7656

PROJECT:

Vacaville Classroom Building (Annex) Renovation Project

CONSULTANT TEAM:

EXCEL ENGINEERS

825 ORANGE AVE.
SUNNYVALE, CA 94087
Telephone: 408 - 230-9164
Fax: 408 - 749-9989

STAMP

REGISTERED PROFESSIONAL ENGINEER
YUE XU
No. 31549
EXP. 12/31/18
MECHANICAL
STATE OF CALIFORNIA

SHEET LEGEND:

ISSUE/REVISION:

NO:	DATE:	DESCRIPTION:
	04/25/2017	ISSUE FOR DD 100%
	06/06/2017	ISSUE FOR CD 50%
	06/30/2017	ISSUE FOR CD 60%
	07/20/2017	ISSUE FOR CD 100%
	10/18/2017	DSA BACKCHECK

KEY PLAN:

FILE: 48-C1

IDENTIFICATION STAMP
DIVISION OF THE STATE ARCHITECT

02-116082

AC JCC FLS GBC SS PVL

DATE: 10/31/2017

SCALE: 1/8" = 1'-0"
DATE:
PROJECT NO:
PERMIT APPLICATION NO.:

PLUMBING FLOOR PLAN

P2.1

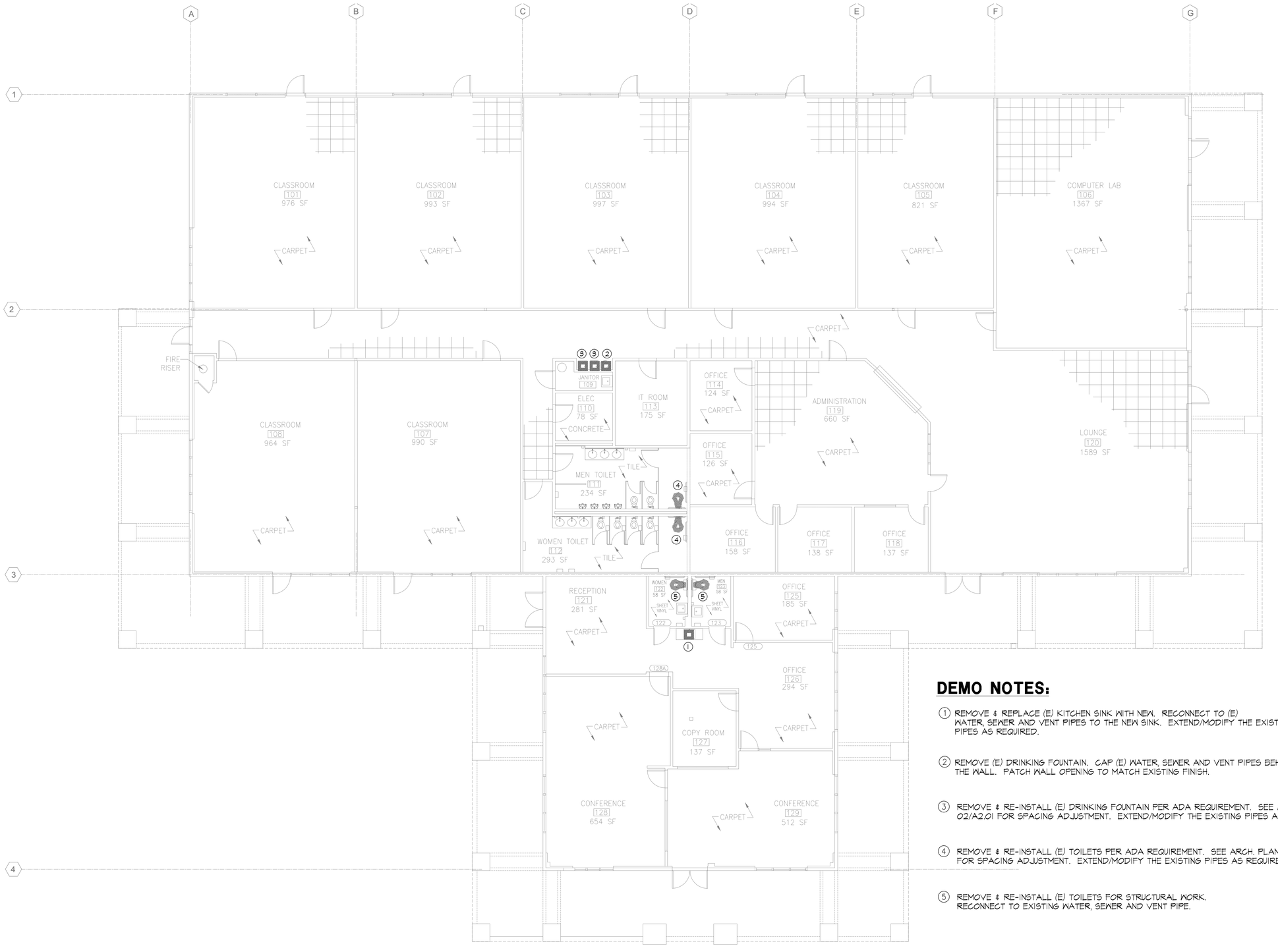

DEMO NOTES:

1. REMOVE & REPLACE (E) KITCHEN SINK WITH NEW. RECONNECT TO (E) WATER, SEWER AND VENT PIPES TO THE NEW SINK. EXTEND/MODIFY THE EXISTING PIPES AS REQUIRED.

2. REMOVE (E) DRINKING FOUNTAIN. CAP (E) WATER, SEWER AND VENT PIPES BEHIND THE WALL. PATCH WALL OPENING TO MATCH EXISTING FINISH.

3. REMOVE & RE-INSTALL (E) DRINKING FOUNTAIN PER ADA REQUIREMENT. SEE ARCH. PLAN 02/A2.01 FOR SPACING ADJUSTMENT. EXTEND/MODIFY THE EXISTING PIPES AS REQUIRED.

4. REMOVE & RE-INSTALL (E) TOILETS PER ADA REQUIREMENT. SEE ARCH. PLAN 10/A2.01 FOR SPACING ADJUSTMENT. EXTEND/MODIFY THE EXISTING PIPES AS REQUIRED.

5. REMOVE & RE-INSTALL (E) TOILETS FOR STRUCTURAL WORK. RECONNECT TO EXISTING WATER, SEWER AND VENT PIPE.

OWNER:

Solano Community College District
2000 North Village Parkway
Vacaville, CA 95688

ARCHITECT:

CA ARCHITECTS
475 Gate Five Road, Suite 107
Sausalito, CA 94965
T 415.331.7655
F 415.331.7656

PROJECT:

Vacaville Classroom Building (Annex) Renovation Project

CONSULTANT TEAM:

EXCEL ENGINEERS

825 ORANGE AVE.
SUNNYVALE, CA 94087
Telephone: 408 - 230-9164
Fax: 408 - 749-9989

STAMP

REGISTERED PROFESSIONAL ENGINEER
YUE XU
No. 31548
EXP. 12/31/18
MECHANICAL
STATE OF CALIFORNIA

SHEET LEGEND:

ISSUE/REVISION:

NO:	DATE:	DESCRIPTION:
	04/25/2017	ISSUE FOR DD 100%
	06/06/2017	ISSUE FOR CD 50%
	06/30/2017	ISSUE FOR CD 60%
	07/20/2017	ISSUE FOR CD 100%
	10/18/2017	DSA BACKCHECK

KEY PLAN:

FILE: 48-C1
IDENTIFICATION STAMP
DIVISION OF THE STATE ARCHITECT
02-116082
AC ICC FLS GBC SS PVL
DATE: 10/31/2017

SCALE: 1/8" = 1'-0"
DATE:
PROJECT NO:
PERMIT APPLICATION NO.:

PLUMBING DEMO FLOOR PLAN

P2.1D

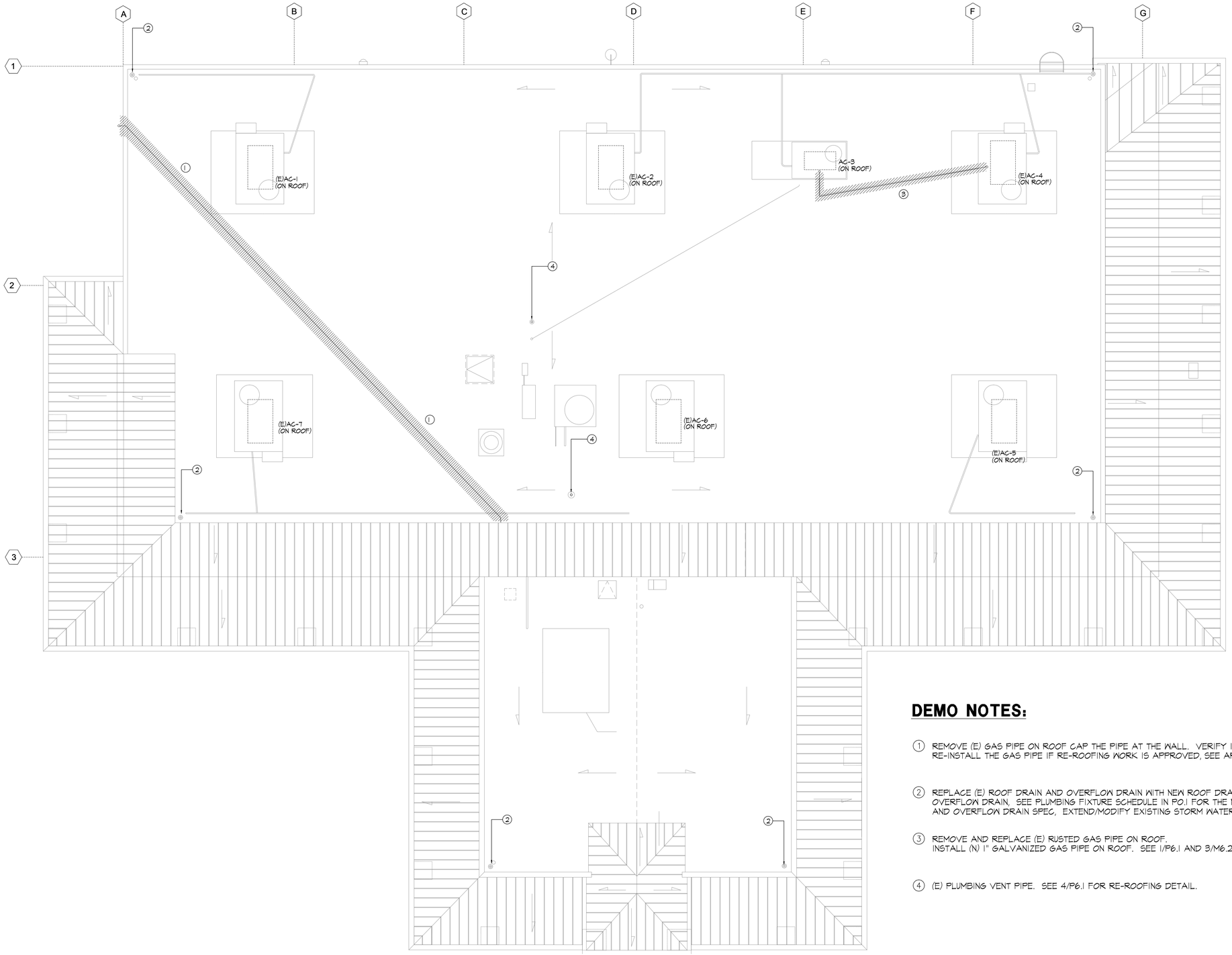

DEMO NOTES:

1. REMOVE (E) GAS PIPE ON ROOF CAP THE PIPE AT THE WALL. VERIFY IN FIELD RE-INSTALL THE GAS PIPE IF RE-ROOFING WORK IS APPROVED, SEE ARCH PLAN A1.01ALT
2. REPLACE (E) ROOF DRAIN AND OVERFLOW DRAIN WITH NEW ROOF DRAIN AND OVERFLOW DRAIN, SEE PLUMBING FIXTURE SCHEDULE IN P0.1 FOR THE NEW ROOF DRAIN AND OVERFLOW DRAIN SPEC, EXTEND/MODIFY EXISTING STORM WATER PIPE AS REQUIRED.
3. REMOVE AND REPLACE (E) RUSTED GAS PIPE ON ROOF. INSTALL (N) 1" GALVANIZED GAS PIPE ON ROOF. SEE 1/P6.1 AND 3/M6.2 FOR DETAIL.
4. (E) PLUMBING VENT PIPE. SEE 4/P6.1 FOR RE-ROOFING DETAIL.

OWNER:

Solano Community College District
2000 North Village Parkway
Vacaville, CA 95688

ARCHITECT:

CA ARCHITECTS
475 Gate Five Road, Suite 107
Sausalito, CA 94965
T 415.331.7655
F 415.331.7656

PROJECT:

Vacaville Classroom Building
(Annex) Renovation Project

CONSULTANT TEAM:

EXCEL ENGINEERS

825 ORANGE AVE.
SUNNYVALE, CA 94087
Telephone: 408 - 230-9164
Fax: 408 - 749-9989

STAMP

SHEET LEGEND:

ISSUE/REVISION:

NO:	DATE:	DESCRIPTION:
	04/25/2017	ISSUE FOR DD 100%
	06/06/2017	ISSUE FOR CD 50%
	06/30/2017	ISSUE FOR CD 60%
	07/20/2017	ISSUE FOR CD 100%
	10/18/2017	DSA BACKCHECK

KEY PLAN:

FILE: 48-C1
IDENTIFICATION STAMP
DIVISION OF THE STATE ARCHITECT
02-116082
AC ICC FLS GBC SS PVL
DATE: 10/31/2017

SCALE: 1/8" = 1'-0"
DATE:
PROJECT NO:
PERMIT APPLICATION NO.:

PLUMBING DEMO ROOF PLAN

P2.2D

SHEET NOTES:

1. REMOVE & REPLACE (E) KITCHEN SINK WITH NEW. RECONNECT TO (E) WATER, SEWER AND VENT PIPES TO THE NEW SINK. EXTEND/MODIFY THE EXISTING PIPES AS REQUIRED.
2. RE-INSTALL (E) DRINKING FOUNTAIN PER ADA REQUIREMENT. SEE ARCH. PLAN 02/A2.01 FOR SPACING ADJUSTMENT. EXTEND/MODIFY THE EXISTING PIPES AS REQUIRED.
3. RE-INSTALL (E) TOILET PER ADA REQUIREMENT. SEE ARCH. PLAN FOR THE SPACE ADJUSTMENT. EXTEND/MODIFY THE EXISTING PIPES AS REQUIRED.
4. RE-INSTALL (E) TOILETS FOR STRUCTURAL WORK. RECONNECT TO (E) WATER, SEWER AND VENT PIPE.
5. PROVIDE FULL SIZE DRAIN PIPE FROM (E) EWH P&T RELIEVE VALVE TO OUTSIDE, TERMINATED 6" A.F.F
6. PROVIDE 3/4" DRAIN PIPE FROM (E) DRAIN PAN TO OUTSIDE BUILDING TERMINATED 6" A.F.F

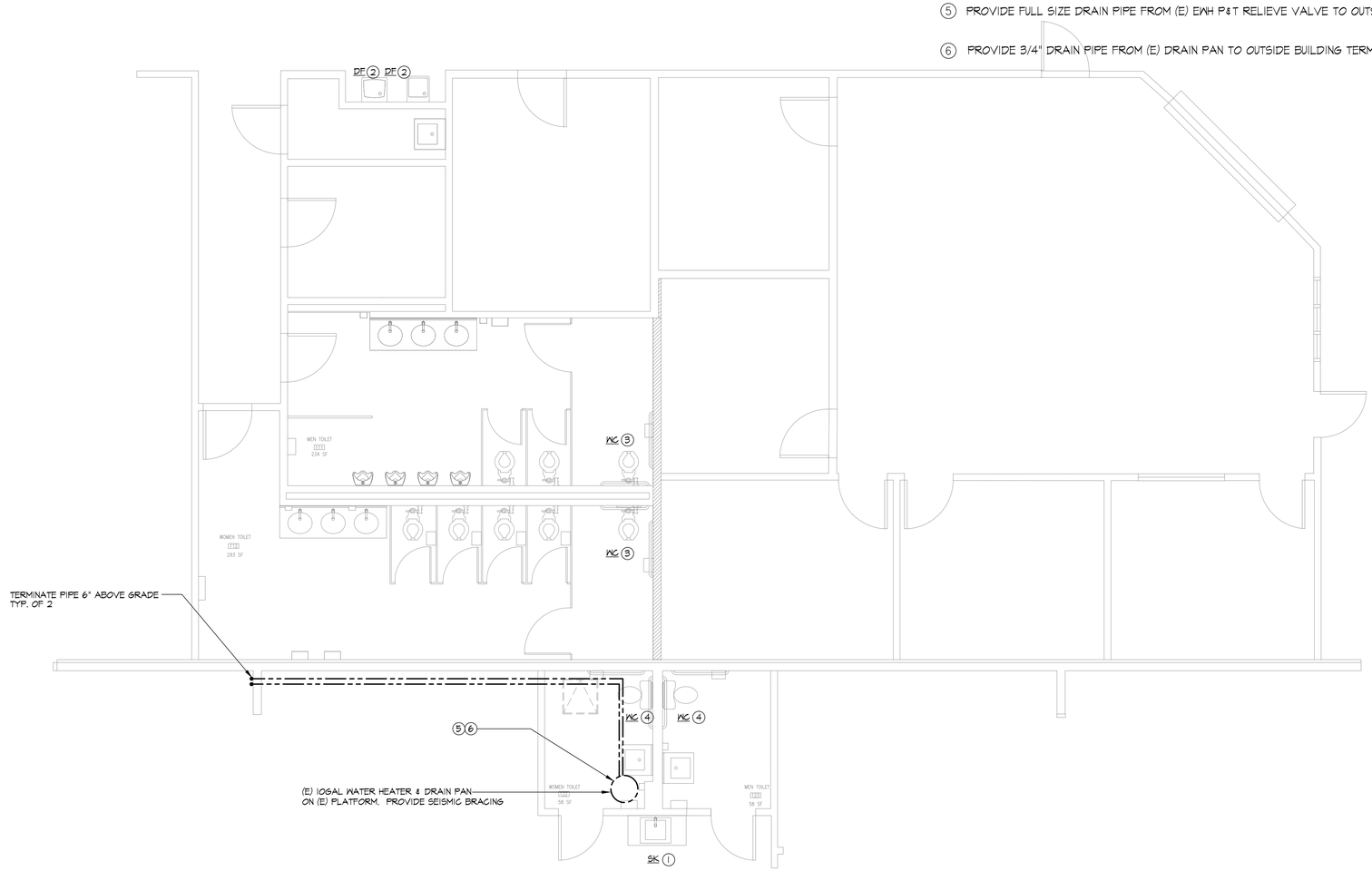

OWNER:

Solano Community College District
2000 North Village Parkway
Vacaville, CA 95688

ARCHITECT:

CA ARCHITECTS
475 Gate Five Road, Suite 107
Sausalito, CA 94965
T 415.331.7655
F 415.331.7656

PROJECT:

Vacaville Classroom Building
(Annex) Renovation Project

CONSULTANT TEAM:

EXCEL ENGINEERS

825 ORANGE AVE.
SUNNYVALE, CA 94087
Telephone: 408 - 230-9164
Fax: 408 - 749-9989

STAMP

SHEET LEGEND:

ISSUE/REVISION:

NO:	DATE:	DESCRIPTION:
	04/25/2017	ISSUE FOR DD 100%
	06/06/2017	ISSUE FOR CD 50%
	06/30/2017	ISSUE FOR CD 60%
	07/20/2017	ISSUE FOR CD 100%
	10/18/2017	DSA BACKCHECK

KEY PLAN:

FILE: 48-C1

IDENTIFICATION STAMP
DIVISION OF THE STATE ARCHITECT

02-116082

AC ICC FLS GBC SS PVL

DATE: 10/31/2017

SCALE: 1/4" = 1'-0"
DATE:
PROJECT NO:
PERMIT APPLICATION NO.:

ENLARGED PLUMBING FLOOR PLAN

P4.1

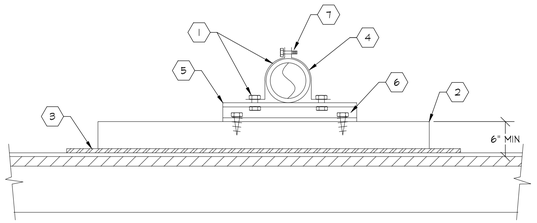

1. PIPE GUIDE - SECURE TO "UNISTRUT" W/ "UNISTRUT" NUTS & BOLTS.
2. REDWOOD SLEEPER OR PRESSURE TREATED SLEEPER 4" x 6" LENGTH TO SUIT. THICKNESS OF SLEEPER FOR CONDENSATE PIPING SHALL ALLOW FOR SLOPE FROM UNIT TO DRAIN.SEE MECH FOR SLEEPER MOUNTING DETAILS (TPY)
3. WALK PAD. MASTIC PAD TO SLEEPER AND ROOF. SEE 3/M6.2 FOR SLEEPER INSTALLATION FOR THE GAS PIPE AND CONDENSING UNIT.
4. UNICUSHION AT EACH CLAMP.
5. "UNISTRUT" P-1000 CHANNEL.
6. 3/8"ø x 3" LONG LAG BOLT THRU INTO SLEEPER.
7. PIPE CLAMP.

NOTE: PIPE SUPPORTS SHALL BE INSTALLED & SPACED PER 2008 SMACNA SEISMIC RESTRAINT MANUAL

1 PIPE ON ROOF DETAIL

P6.1 NOT TO SCALE

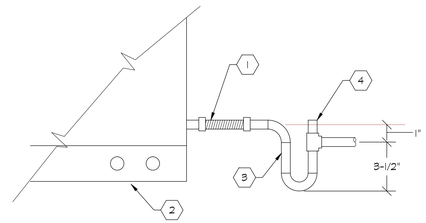

1. CD CONNECTION W/ 4" LONG FLEXIBLE HOSE SECURED W/ STAINLESS STEEL CLAMPS AT ALL SPRING ISOLATED UNITS ONLY.
2. UNIT BASE.
3. TYPE "M" COPPER SOLDERED TRAP & PIPING SEE PLAN FOR SIZE.
4. TOP OF VENT @ ℄ OF CD OUTLET.

2 CONDENSATE DRAIN DETAIL

P6.1 NOT TO SCALE

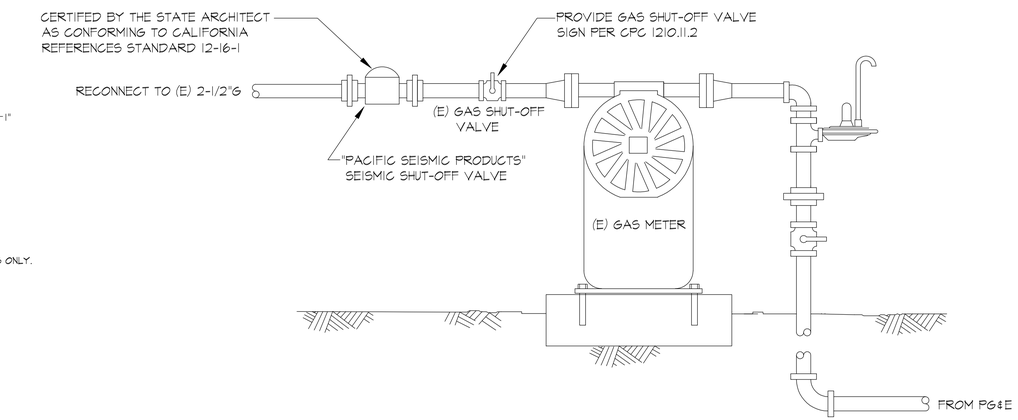

3 GAS METER & SEISMIC SHUT-OFF VALVE DETAIL

P6.1 NOT TO SCALE

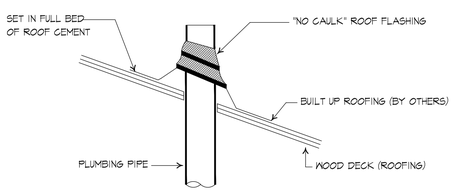

NOTES:

1. SET FLASHING ON FINISHED ROOF PLIES AND STRIP-IN BEFORE SURFACING.
2. FLANGE TO EXTEND A MINIMUM OF 3".
3. USE "STONEMAN" SEAMLESS LEAD VERSA - FLASH ASSEMBLIES

4 VENT PIPE THRU ROOF DETAIL

P6.1 NOT TO SCALE

OWNER:

Solano Community College District
2000 North Village Parkway
Vacaville, CA 95688

ARCHITECT:

CA ARCHITECTS
475 Gate Five Road, Suite 107
Sausalito, CA 94965
T 415.331.7655
F 415.331.7656

PROJECT:

Vacaville Classroom Building (Annex) Renovation Project

CONSULTANT TEAM:

EXCEL ENGINEERS
825 ORANGE AVE.
SUNNYVALE, CA 94087
Telephone: 408 - 230-9164
Fax: 408 - 749-9989

STAMP

REGISTERED PROFESSIONAL ENGINEER
YUE XU
No. 31549
EXP. 12/31/18
MECHANICAL
STATE OF CALIFORNIA

SHEET LEGEND:

ISSUE/REVISION:

NO:	DATE:	DESCRIPTION:
	04/25/2017	ISSUE FOR DD 100%
	06/06/2017	ISSUE FOR CD 50%
	06/30/2017	ISSUE FOR CD 60%
	07/20/2017	ISSUE FOR CD 100%
	10/18/2017	DSA BACKCHECK

KEY PLAN:

FILE: 48-C1
IDENTIFICATION STAMP
DIVISION OF THE STATE ARCHITECT
02-116082
AC ICC FLS GBC SS PVL
DATE: 10/31/2017

SCALE:
DATE:
PROJECT NO:
PERMIT APPLICATION NO.:

PLUMBING DETAILS

P6.1

GENERAL

A. ALL CONSTRUCTION MATERIALS AND WORKMANSHIP SHALL BE IN ACCORDANCE WITH THE CALIFORNIA BUILDING CODE, 2016 EDITION (CBC).

B. THESE NOTES APPLY TO ALL STRUCTURAL DRAWINGS AND GOVERN UNLESS OTHERWISE NOTED OR SPECIFIED.

VERIFY ALL EXISTING CONDITIONS AND PROPOSED DIMENSIONS AT JOB SITE. COMPARE STRUCTURAL DRAWINGS WITH OTHER DISCIPLINE DRAWINGS BEFORE COMMENCING WORK. NOTIFY ARCHITECT OF ANY DISCREPANCIES AND DO NOT PROCEED WITH AFFECTED WORK UNTIL THEY ARE RESOLVED. DO NOT SCALE DRAWINGS. WHERE THERE IS A DISCREPANCY IN THE DRAWINGS, THE CONTRACTOR IS TO INCLUDE IN HIS OR HER BID THE MORE EXPENSIVE VERSION. COMPARE WITH ORIGINAL DRAWINGS TITLED "INTERIM COLLEGE FACILITY, NORTHVILLAGE" DATED 8-8-95 PREPARED BY MARR-SHAFFER & ASSOCIATES, CONSULTING STRUCTURAL ENGINEERS.

C. UNLESS OTHERWISE SHOWN OR NOTED, ALL TYPICAL DETAILS SHALL BE USED AT SIMILAR CONDITIONS.

D. SHOP DRAWINGS SHALL BE SUBMITTED AND REVIEWED BY THE ENGINEER BEFORE FABRICATION, FOR THE FOLLOWING ITEMS:
REINFORCING BARS
STRUCTURAL STEEL
MISCELLANEOUS STEEL

E. SAFETY MEASURES: AT ALL TIMES THE CONTRACTOR(S) SHALL BE SOLELY AND COMPLETELY RESPONSIBLE FOR THE CONDITIONS OF THE JOB SITE INCLUDING SAFETY OF PERSONS AND PROPERTIES, AND FOR ALL NECESSARY INDEPENDENT ENGINEERING REVIEWS OF THESE CONDITIONS (EXAMPLE: SHORING).

DRAWINGS AND SPECIFICATIONS REPRESENT FINISHED STRUCTURE. CONTRACTOR SHALL BE RESPONSIBLE FOR MEANS AND METHODS OF CONSTRUCTION INCLUDING, BUT NOT SOLELY LIMITED TO, SHORING AND TEMPORARY BRACING. THE CONTRACTOR SHALL TAKE ALL NECESSARY MEASURES TO INSURE SAFETY OF ALL PERSONS AND STRUCTURES AT THE SITE AND ADJACENT TO THE SITE. OBSERVATION VISITS TO THE SITE BY THE ENGINEER OR CONSTRUCTION MANAGER SHALL NOT RELIEVE THE CONTRACTOR OF SUCH RESPONSIBILITY. SITE VISIT ARE NOT INTENDED TO REVIEW THE ADEQUACY OF THE CONTRACTOR(S) SAFETY MEASURES.

F. OMISSIONS OR CONFLICTS BETWEEN VARIOUS ELEMENTS OF THE DRAWINGS, NOTES, AND DETAILS SHALL BE BROUGHT TO THE ATTENTION OF THE ARCHITECT AND RESOLVED BEFORE PROCEEDING WITH THE WORK.

G. DO NOT USE SCALED DIMENSIONS; USE WRITTEN DIMENSIONS. WHERE NO DIMENSION IS PROVIDED, CONSULT THE ARCHITECT FOR CLARIFICATION BEFORE PROCEEDING WITH THE WORK.

H. ALL WORK AND MATERIALS NOT NOTED AS EXISTING (E) SHALL BE ASSUMED TO BE NEW (N) CONSTRUCTION.

I. IF CERTAIN FEATURES ARE NOT FULLY SHOWN OR CALLED FOR ON THE DRAWINGS OR SPECIFICATIONS, THEIR CONSTRUCTION SHALL BE OF THE SAME CHARACTER AS FOR SIMILAR CONDITIONS THAT ARE CALLED FOR OR SHOWN.

J. REQUIRED WORK SHALL INCLUDE, BUT IS NOT NECESSARILY LIMITED TO, WORK CALLED FOR BY NOTES ON DRAWINGS. WHILE THE DRAWINGS INDICATE ITEMS TO BE REMOVED, REPLACED OR REWORKED, THEY MAY NOT NECESSARILY INDICATE ALL ASPECTS OF WORK REQUIRED. IT SHALL BE THE RESPONSIBILITY OF THE CONTRACTOR TO FURNISH AND INSTALL ALL WORK NECESSARY TO COMPLETE AND FINISH ALL AREAS IN AND AROUND SUCH ITEMS.

K. THE GENERAL CONTRACTOR MUST CAREFULLY SCRUTINIZE ALL DRAWINGS TO ASCERTAIN ALL REQUIRED WORK ARISING OUT OF WORK DONE BY MECHANICAL, PLUMBING, ELECTRICAL OR OTHER SUB-CONTRACTORS. FLOOR, WALL OR ROOF OPENINGS AS REQUIRED FOR SUCH TRADES SHALL BE VERIFIED FROM SHOP DRAWINGS, EQUIPMENT DATA, ETC.

N. THE CONTRACTOR SHALL PROVIDE APPROPRIATE BARRIERS BETWEEN THE CONSTRUCTION AREA AND THE REMAINDER OF THE SITE OR BUILDING, AND SHALL COMPLY WITH CALIFORNIA BUILDING CODE (CBC) SECTION 3303 - PROTECTION OF PEDESTRIANS DURING CONSTRUCTION OR DEMOLITION. IN ADDITION, THE CONTRACTOR SHALL PROVIDE ANY OTHER CONSTRUCTION FENCING, BARRICADES, WARNING SIGNS AND LIGHTS, AND SHALL EXERCISE ALL SAFETY MEASURES NECESSARY TO PROTECT AND RENDER THE PREMISES.

O. WHERE DEMOLITION OR OTHER DUST PRODUCING WORK IS PERFORMED ON BUILDING INTERIORS, PLASTIC DUST BARRIERS MUST BE ERECTED TO PREVENT DUST FROM SPREADING TO ADJACENT AREAS.

P. THE SCOPE OF WORK INCLUDES CLEANUP NECESSARY TO LEAVE THE BUILDING AND CONSTRUCTION AREA IN A NEAT AND USABLE CONDITION.

Q. WHERE EXISTING FINISHES OR FEATURES MUST BE DISTURBED TO EXECUTE THE WORK SHOWN ON THE DRAWINGS OR CALLED FOR IN SPECIFICATIONS, INCLUDING BUT NOT NECESSARILY LIMITED TO THE REMOVAL OF CONCRETE FLOOR SLABS, WALL, CEILING, OR FLOOR FINISHES, OR ROOFING, SUCH ITEMS MUST BE REPLACED TO MATCH EXISTING CONDITIONS, SURFACES AND FINISHES AS CLOSE AS POSSIBLE. FINISHES SUCH AS CARPET, MAY BE REMOVED STORED, AND REPLACED AFTER WORK IS COMPLETE U.N.O.

R. WHERE NEW WORK REQUIRES THE REMOVAL OF EXISTING ELEMENTS THAT PENETRATE FLOOR, WALL, CEILING OR ROOF SURFACES, THE OPENINGS LEFT BY SUCH REMOVAL SHALL BE REPAIRED AND FINISHED TO MATCH ADJACENT SURFACES AND FINISHES. THIS REQUIREMENT SHALL ALSO APPLY TO SITUATIONS WHERE NEW, SMALLER ELEMENTS ARE INSTALLED IN EXISTING OPENINGS.

S. WHERE NECESSARY TO PREVENT CRACKING OF EXISTING PLASTER SURFACES, FASTENING MUST BE BY MEANS OF SCREWS IN PRE-DRILLED HOLES.

T. WHERE WORK REQUIRES THE PENETRATION OF EXTERIOR WALLS OR ROOFS, SUCH WORK SHALL BE FLASHED, SEALED OR OTHERWISE MADE TIGHT AGAINST THE ENTRANCE OF AIR OR WATER. AND ALL REQUIRED RATINGS ARE TO BE MAINTAINED.

U. THE CONTRACTOR SHALL TAKE EVERY PRECAUTION TO PREVENT FIRES ESPECIALLY DURING WELDING.

V. (E)CONDITION BASED ON ORIGINAL DRAWINGS

DEMOLITION AND CONSTRUCTION SHORING

A. THE REMOVAL, CUTTING, DRILLING, ETC. OF EXISTING ELEMENTS SHALL BE PERFORMED WITH CARE IN ORDER NOT TO JEOPARDIZE THE STRUCTURAL INTEGRITY OF THE EXISTING BUILDINGS. DO NOT OVER CUT EXISTING ELEMENTS. IF STRUCTURAL MEMBERS NOT INDICATED FOR REMOVAL. INTERFERE WITH NEW WORK, THE CONTRACTOR SHALL IMMEDIATELY NOTIFY THE ENGINEER AND OBTAIN PRIOR APPROVAL BEFORE DRILLING, CUTTING OR REMOVING SUCH MEMBERS, UNLESS SUCH WORK IS DETAILED ON THE DRAWINGS.

B. CONTRACTOR SHALL EXERCISE CAUTION WHEN REMOVING OR OTHERWISE DISTURBING EXISTING STRUCTURAL OR LOAD BEARING ELEMENTS TO ALLOW THE INSTALLATION OF NEW WORK. ALL FEATURES AFFECTED BY THE REMOVAL OF SUCH ELEMENTS MUST BE PROPERLY SHORED AND BRACED. EXISTING CONSTRUCTION SHALL BE CONNECTED TO NEW CONSTRUCTION AS SHOWN OR SPECIFIED IN THE DRAWINGS. SHORING SHALL REMAIN IN PLACE UNTIL ALL NEW CONSTRUCTION HAS BEEN COMPLETED.

C. THE CONTRACTOR SHALL VERIFY THE LOCATION OF EXISTING UTILITIES BEFORE BEGINNING WORK. SPECIAL CARE SHALL BE TAKEN TO PROTECT UTILITIES THAT ARE TO REMAIN IN SERVICE DURING CONSTRUCTION.

D. THE CONTRACTOR SHALL BE RESPONSIBLE FOR ANY DAMAGE DONE BY HIM OR HIS AGENTS TO THE PROPERTY, AND SHALL REPAIR SAME AT HIS OWN EXPENSE. NOTE THAT HEAVY EQUIPMENT DRIVEN OVER CONCRETE PAVEMENT IN PEDESTRIAN AREAS MAY CAUSE DAMAGE TO SUCH PAVEMENT.

E. SHORING TO PROVIDE SUPPORT FOR EXISTING CONSTRUCTION IS THE RESPONSIBILITY OF THE GENERAL CONTRACTOR. ALL SHORING INCLUDING SITE SHORING SHALL BE DESIGNED BY THE CONTRACTOR'S CALIFORNIA REGISTERED STRUCTURAL ENGINEER.

F. SEE TYPICAL DETAILS AT CUT OPENINGS. S.A.D. FOR FINISH AT DEMOLISHED SURFACES.

TESTS AND INSPECTIONS

A. PROVIDE TESTS AND INSPECTIONS FOR ALL ITEMS REQUIRED BY THE CALIFORNIA BUILDING CODE, 2016 EDITION.

B. THE OWNER SHALL BE RESPONSIBLE FOR RETAINING AN INDEPENDENT TESTING LAB TO PERFORM ALL REQUIRED TESTING AND INSPECTIONS.

C. THE TEST AND SPECIAL INSPECTION REQUIREMENTS OF CHAPTER 17A OF THE 2016 EDITION OF THE CALIFORNIA BUILDING CODE APPLY TO THE FOLLOWING:
CONCRETE REINFORCEMENT
DRILLED DOWEL AND ANCHORS IN RESIN
DRILLED DOWEL AND ANCHORS IN CEMENTITIOUS GROUT
EXPANSION ANCHORS
CAST IN PLACE CONCRETE
MISCELLANEOUS STEEL
WELDING (VISUAL)
PLYWOOD DIAPHRAGM NAILING

D. THE CONTRACTOR SHALL BE RESPONSIBLE FOR PROVIDING THE TESTING LAB WITH CONSTRUCTION SCHEDULES TO ENSURE PROPER COORDINATION OF WORK.

E. SEE STRUCTURAL TESTS AND INSPECTION FORM IN THE CONTRACT DOCUMENTS FOR ITEMS REQUIRING TESTING AND SPECIAL INSPECTION.

F. THE CONTRACTOR SHALL NOTIFY THE ENGINEER AND INSPECTOR A MINIMUM OF 48 HOURS PRIOR TO TIME OF INSPECTION.

CONSTRUCTION SEQUENCE

A. THE GENERAL CONTRACTOR SHALL BE RESPONSIBLE FOR DEVELOPING AND COORDINATING THE SEQUENCE OF SHORING, EXCAVATION, DISASSEMBLY, DEMOLITION AND NEW CONSTRUCTION.

DESIGN BASIS

A. APPLICABLE CODE: CALIFORNIA BUILDING CODE, 2016 EDITION
B. VERTICAL LIVE LOADS:

1. ROOF : 20 PSF

C. LATERAL LOADS:

1. SEISMIC
PER CBC CHAP. 34 + ASCE 41
CONC. TILT-UP SHEAR WALL w/ PLYWOOD DIAPHRAGM
SITE CLASS D,
BSE-2N SPECTRAL RESPONSE ACCELERATION PARAMETERS:
Sxs=1.605g, Sx1 =0.827g
BSE-1E SPECTRAL RESPONSE ACCELERATION PARAMETERS:
Sxs=0.799g, Sx1 =0.426g
ANALYSIS: LINEAR STATIC
BSE 1E BASE SHEAR = 941 KIPS
BSE-2N BASE SHEAR = 1889 KIPS.
ACCEPTANCE CRITERIA:
BSE-1E LIFE SAFETY
BSE-2N COLLAPSE PREVENTION
2. WIND
Vult=110MPH, Vasd=85MPH
RISK CATEGORY II
EXPOSURE C
GCpi=±0.18
MAX. ROOF CLADDING PRESSURE = 77.9PSF FOR 10S.F.

FOUNDATION

A. FOR DETAILED INFORMATION, REFER TO "GEOLOGIC HAZARDS AND GEOTECHNICAL ENGINEERING REPORT, SOLANO COUNTY OFFICE OF EDUCATION, JOINT USE BUILDING, WKA NO. 9927.01P"BY WALLCE KUHL & ASSOCIATES SECTION, DATED DECEMBER 18, 2013.

B. SLABS-ON-GROUND SHALL BEAR ON FIRM UNYIELDING SUBGRADE.

C. ALL COMPACTED NATURAL SOIL FILL AND BACKFILL IS TO BE UNIFORMLY COMPACTED WITH APPROVED COMPACTION EQUIPMENT. SEE GEOTECHNICAL REPORT FOR COMPACTION REQUIREMENTS. ALL FILL MATERIAL AND OPERATIONS SHALL BE INSPECTED BY THE GEOTECHNICAL ENGINEER.

D. DO NOT ALLOW WATER TO STAND IN TRENCHES. IF BOTTOM OF TRENCHES BECOME SOFTENED DUE TO RAIN OR OTHER WATER BEFORE CONCRETE IS CAST, EXCAVATE SOFTENED MATERIAL AND REPLACE WITH PROPERLY COMPACTED BACKFILL OR CONCRETE AT NO COST TO OWNER.

E. THE SPECIAL INSPECTION REQUIREMENTS OF THE CALIFORNIA BUILDING CODE 2016 EDITION (CHAPTER 17, TABLE 1704.7) APPLY TO FOUNDATION SUBGRADES, EXCAVATIONS, FILL AND BACKFILL OPERATIONS. FOOTINGS EXCAVATIONS SHALL BE INSPECTED AND APPROVED BY THE GEOTECHNICAL ENGINEER'S REPRESENTATIVE PRIOR TO PLACING REINFORCING STEEL.

F. ALL FOUNDATION EXCAVATIONS MUST BE REVIEWED AND APPROVED BY THE SOILS ENGINEER PRIOR TO PLACEMENT OF CONCRETE.

G. VERIFY LOCATION OF UNDERGROUND UTILITIES BEFORE EXCAVATION. NOTIFY ARCHITECT PRIOR TO EXCAVATION IN THE EVENT SUCH UTILITIES ARE ENCOUNTERED.

J. FOR DRAINAGE DETAILS, SUMPS, PITS DAMP PROOFING, TRENCHES, CURBS, EXTERIOR WALKS, UTILITIES, EQUIPMENT DETAILS, STEPS, ETC., SEE DRAWINGS OTHER THAN STRUCTURAL.

K. ALL SUBGRADE SURFACES SHALL MEET THE REQUIREMENTS GIVEN IN THE GEOTECHNICAL REPORT.

L. ALLOWABLE BEARING PRESSURES FOR SPREAD FOOTINGS ON SOIL:
DL + LL = 3,000 PSF
DL + LL + EQ = 4,000 PSF

CONCRETE

A. REINFORCE ALL CONCRETE. INSTALL ALL INSERTS, BOLTS, ANCHORS, AND REINFORCING AND SECURELY TIE PRIOR TO PLACING CONCRETE.

B. PORTLAND CEMENT SHALL CONFORM TO ASTM C-150 TYPE II, LOW ALKALI.

C. CONCRETE SHALL BE HARDROCK CONCRETE AND SHALL ATTAIN THE FOLLOWING ULTIMATE COMPRESSIVE STRENGTHS AT 28 DAYS. MINIMUM CEMENT CONTENT: 5-1/2 SACKS PER CUBIC YARD.

LOCATION/ CLASS	MIN. STRENGTH @ 28 DAYS PSI	MAX. AGGREGATE SIZE - INCHES	MAX. SLUMP INCHES	WATER/CEMENT RATIO
SLAB ON GRADE/A	4000	1	4	0.40
TOPPING SLAB/B	4000	3/4	4	0.40

D. CONSOLIDATE CONCRETE BY THE USE OF MECHANICAL VIBRATORS, BUT DO NOT OVER VIBRATE.

E. CONCRETE SHALL BE PLACED IN A CONTINUOUS OPERATION UNTIL THE SECTION IS COMPLETED BETWEEN PREDETERMINED CONSTRUCTION JOINTS.

F. CONCRETE MIX TO COMPLY WITH CBC 1905A.2 USING METHOD B TO ESTABLISH CONCRETE PROPORTION.

G. CONCRETE SHALL BE CONTINUOUSLY CURED FOR 10 DAYS AFTER PLACING IN ANY APPROVED MANNER, INCLUDING CURING COMPOUND, CURING PAPER, ETC.

NOTE: FOOTINGS ARE EXCEPTED FROM THIS REQUIREMENT.

H. WHEN PLACING NEW CONCRETE OR SHOTCRETE AGAINST EXISTING CONCRETE, ROUGHEN SURFACE OR EXISTING MATERIAL BY EITHER SANDBLASTING OR SCARIFYING TO 1/4" AMPLITUDE AND APPLY BONDING AGENT. BONDING AGENT SHALL BE LARSEN PRODUCTS CORP'S. WELD-CRETE OR APPROVED EQUIVALENT.

I. ALL EXPOSED CORNERS OR EDGES OF COLUMNS, PIERS WALLS, BEAMS ETC., SHALL BE FORMED WITH A 3/4" CHAMFER SPECIFICALLY NOTED OTHERWISE.

J. CONSTRUCTION JOINTS SHALL BE LOCATED WHERE SHOWN, AND IF NOT SHOWN, WHERE DIRECTED BY THE OWNER. THEY SHALL BE LOCATED SO AS TO LEAST IMPAIR THE STRENGTH OF THE STRUCTURE AND TO MINIMIZE SHRINKAGE. PROVIDE DOWELS AND KEYS AS DETAILED AND DIRECTED. THOROUGHLY CLEAN AND ROUGHEN SURFACES BY SANDBLASTING BEFORE PROCEEDING WITH THE NEXT POUR. ALL EXISTING CONCRETE AND MASONRY TO HAVE NEW CONCRETE AGAINST IT SHALL BE THOROUGHLY ROUGHENED TO A 1/4 INCH AMPLITUDE, THEN BLASTED CLEAN WITH COMPRESSED AIR.

K. S.A.D. FOR DRIPS, REGLETS, REVEALS, IMBEDS AND FEATURES.

REINFORCING STEEL

A. ALL REINFORCING STEEL BARS SHALL CONFORM WITH THE STANDARD SPECIFICATIONS FOR DEFORMED STEEL FOR CONCRETE REINFORCEMENT, ASTM DESIGNATION A706. WELDING SHALL BE PER AWS D1.4.

B. SUITABLE DEVICES OF SOME STANDARD MANUFACTURE SHALL BE USED TO HOLD REINFORCEMENT IN ITS TRUE HORIZONTAL AND VERTICAL POSITIONS. THESE DEVICES SHALL BE SUFFICIENTLY RIGID AND NUMEROUS TO PREVENT DISPLACEMENT OF THE REINFORCING DURING PLACING OF CONCRETE.

C. UNLESS OTHERWISE NOTED, MAINTAIN COVERAGE TO FACE OF BARS AS FOLLOWS:
3 INCHES WHERE CONCRETE IS DEPOSITED AGAINST EARTH EXCEPT SLAB-ON-GRADE.
2 INCHES WHERE CONCRETE IS EXPOSED TO EARTH OR WEATHER, BUT FORMED.
1-1/2 INCHES ELSEWHERE.

D. FOR NON-SHRINK GROUT USE MASTER BUILDERS, MASTERFLOW 928 OR APPROVED EQUAL (MUST HAVE I.C.C APPROVAL ADDITIONALLY). WIRE BRUSH HOLE AND CLEAN OUT THOROUGHLY BEFORE GROUTING. FOLLOWING MANUFACTURER'S RECOMMENDATIONS.

FRAMING LUMBER

A. ALL FRAMING LUMBER SHALL BE GRADED PER WCLIB GRADING RULES NO. 17.

B. PRESSURE TREATED LUMBER SHALL CONFORM TO THE AMERICAN WOOD PRESERVERS INSTITUTE (AWPA), INCLUDING M4 FOR FIELD CUTS AND HOLES. EACH PIECE OF LUMBER SHALL BE STAMPED WITH THE AWPA SEAL. PRESSURE TREATED LUMBER SHALL BE AWPA TREATED DOUGLAS FIR.

C. ALL POSTS, BEAMS AND JOISTS SHALL BE DOUGLAS FIR #1 OR BETTER.

D. ALL STUDS SHALL BE DOUGLAS FIR LARCH #1 OR BETTER.

E. ALL LUMBER IN CONTACT WITH CONCRETE SHALL BE PRESSURE TREATED DOUGLAS FIR #2 OR BETTER AND HAVE THE AWPA STAMP ON EACH PIECE. SILLS SHALL BE 3X MIN.

F. ALL STRUCTURAL LUMBER EXPOSED TO THE EXTERIOR ENVIRONMENT SHALL BE PRESSURE TREATED.

G. NAILING OF PLYWOOD SHEATHING SHOULD BE DONE BY HAND. UNLESS MACHINE NAILING IS APPROVED BY ENGINEER. NAILHEADS MUST NOT PENETRATE THE OUTER PLYWOOD MORE THAN WOULD BE NORMAL FOR A HAND PERFORMANCE.

H. ALL LUMBER SHALL HAVE A MOISTURE CONTENT NOT EXCEEDING 16% AT INSTALLATION.

I. REFER TO SPECIFICATIONS FOR COMPLETE REQUIREMENTS

PLYWOOD/ WOOD STRUCTURAL PANELS

A. EACH PANEL SHALL BE INDENTIFIED WITH THE APPROPRIATE GRADE, TRADEMARK OF THE ENGINEERED WOOD ASSOCIATION (APA), AND SHALL MEET THE REQUIREMENTS OF THE LATEST EDITION OF THE U.S. PRODUCT STANDARD PS-1. THE MINIMUM EDGE DISTANCE FOR NAILS IN THE RECEIVING MEMBERS AND THE PLYWOOD SHALL BE 3/8"

B. PLYWOOD SHEETS SHALL BE THICKNESS NOTED ON DRAWINGS. USE EXTERIOR GRADE ADHESIVE FOR ALL PLYWOOD. IF PLYWOOD AND NAILING IS INCORRECTLY INSTALLED/DAMAGED, PLYWOOD WILL BE REMOVED AND REPLACED AND FRAMING MEMBERS COULD BE REPLACED (AS DETERMINED BY INSPECTOR OR ENGINEER), ALL DONE AT CONTRACTOR(S) EXPENSE.

C. PLYWOOD SHEETS ON WALLS SHALL BE LAID WITH LONG DIMENSION VERTICAL, UNLESS OTHERWISE NOTED. BLOCK ALL EDGES. SHEARWALLS MORE THAN ONE VERTICAL PANEL IN HEIGHT SHALL HAVE STAGGERED SPLICED JOINTS. AT EXISTING WALLS, REMOVE FINISHES TO APPLY PLYWOOD DIRECTLY TO STUDS.

D. ROOF PLYWOOD SHALL BE STRUCTURAL I, 5 PLY 15/32 INCH 24/16 CDX.

E. MINIMUM WIDTH OF PLYWOOD PIECE APPLIED SHALL BE 24" FOR SHEARWALLS AND DIAPHRAGMS.

H. FOR PLYWOOD SPLICES, THE EDGES OF ADJOINING SHEETS SHALL TERMINATE ON THE SAME MEMBER, EXAMPLE: STUD, BLOCKING PLATE, JOIST, ETC. AND SHALL BE MINIMUM 2X, UNLESS OTHERWISE NOTED. LEAVE 1/16 INCH GAP BETWEEN PLYWOOD EDGES.

STRUCTURAL STEEL

A. STEEL MATERIALS SHALL CONFORM TO THE FOLLOWING:

PLATES	ASTM A36
WF SHAPES	ASTM A992, GR:50
CHANNELS & ANGLES	ASTM A36
TUBES	ASTM A500, GRADE B
BASE PLATES	ASTM A36
THREADED RODS	ASTM A36
MACHINE BOLTS (M.B.)	ASTM A307
WELDED STUDS	ASTM A108
ANCHOR BOLTS	ASTM A36
PIPES	ASTM A53, TYPE E, GRADE B
SILL BOLTS	ASTM 307 OR A36 AND HAVE WASHERS

B. ALL ANCHOR BOLTS SHALL CONFORM WITH ASTM A307 OR A36, AND HAVE WASHERS.

C. ANCHOR BOLTS SHALL BE EMBEDDED A MINIMUM OF 10" INTO CONCRETE WITH A PLATE WASHER 3/8"x4"x4" MIN. AND DOUBLE NUTS UNLESS OTHERWISE NOTED. USE OF UPSET BOLTS IS NOT PERMITTED. DO NOT COUNTERSINK IN SILL. ANCHOR BOLTS TO HAVE THREAD SHOWING ABOVE BOLT WASHER AND NUT.

D. ALL WORK SHALL BE PERFORMED IN ACCORDANCE WITH AISC "SPECIFICATIONS FOR DESIGN, FABRICATION AND ERECTION OF STRUCTURAL STEEL FOR BUILDINGS."

E. WELDING SHALL CONFORM WITH THE LATEST EDITION OF THE AWS D1.1 SPECIFICATIONS. USE E70 ELECTRODES. WELDING SHALL BE OBSERVED AS PER AWS INSPECTION PROCEDURES.

F. CLEAN AND PROVIDE PRIMER COAT OF PAINT AFTER FABRICATION, BUT BEFORE JOB SITE DELIVERY. CLEAN AND PROVIDE PRIMER COATS FOR ALL WELDS INCLUDING FIELD WELDING.

G. ALL STEEL EXPOSED TO THE EXTERIOR SHALL BE HOT-DIP GALVANIZED. TOUCH-UP GALVANIZING AND AT THE WELDS WITH GALVALOG (ONLY AFTER WELDING HAS BEEN INSPECTED).

WEDGE ANCHORS

A. CONTINUOUS SPECIAL INSPECTION IS REQUIRED.

B. TEST 100% OF ANCHORS FOR SUPPORT OF EQUIPMENT GREATER THAN 200 POUNDS. FOR OTHER CASES TEST 100% OF ALL ANCHORS INSTALLED.

C. USE CARBIDE DRILL OF DIAMETER SPECIFIED BY MANUFACTURER.

D. DO NOT DRILL THROUGH REBAR.

E. TESTING

1. SEE B FOR QUANTITY OF TESTS. TEST TO VALUES TABULATED BELOW. DO NOT REMOVE NUT FOR TEST; THE CONTRACTOR SHALL PROVIDE SUFFICIENT THREAD LENGTH TO PERFORM TENSION TEST.

2. REACTION LOADS FROM TEST FIXTURE MUST NOT RESTRAIN ANCHOR FROM WITHDRAWING. TEST EQUIPMENT IS TO BE CALIBRATED BY AN APPROVED TESTING LABORATORY IN ACCORDANCE WITH STANDARD RECOGNIZED PROCEDURES.

3. TESTS SHOULD OCCUR 24 HOURS MINIMUM AFTER THE INSTALLATION OF THE SUBJECT ANCHOR.

4. ACCEPTANCE CRITERIA FOR INSTALLED ANCHORS: HYDRAULIC RAM METHOD: THE ANCHOR SHALL HAVE NO OBSERVABLE MOVEMENT AT THE APPLICABLE TEST LOAD. THE WASHER UNDER THE NUT MUST NOT BECOME LOOSE.

F. LOCATE REINFORCEMENT IN (E) CONC PRIOR TO DRILLING. DO NOT CUT OR DAMAGE (E)_REINFORCING.

G. HOLES FOR WEDGE ANCHORS SHALL NOT BE CORED, AND SHALL BE DRILLED USING NON-IMPACT ROTARY TOOLS.

H. TORQUE TEST
1. THE APPLICABLE TEST TORQUE MUST BE REACHED WITHIN ½ TURN OF THE NUT FOR WEDGE ANCHORS.
2. IF THE MANUFACTURER'S RECOMMENDED INSTALLATION TORQUE IS LESS THAN THE TEST TORQUE NOTED, THE MANUFACTURER'S RECOMMENDED INSTALLATION TORQUE SHOULD BE FOLLOWED IN LIEW OF THE ABOVE NOTED VALUES.

ANCHOR	ANCHOR SIZE	MIN EMBED*	PROOF LOAD (POUNDS)	TORQUE (FT, LBS)
HILTI KB TZ	3/8	2 5/8"	1050	25
	1/2	4"	1810	50
	5/8	4 3/4"	3157	80
	3/4	5 3/4"	4085	150
HILTI HDA SIMPSON STRONGBOLT	3/8	4 1/4"	2280	25
	1/2	3 7/8"	1810	50
	5/8	5 1/8"	3157	80
	3/4	7 1/2"	4085	150

* USE MIN EMBED U.N.O.

OWNER:

Solano Community College District
2000 North Village Parkway
Vacaville, CA 95688

ARCHITECT:

CA ARCHITECTS
475 Gate Five Road, Suite 107
Sausalito, CA 94965
T 415.331.7655
F 415.331.7656

PROJECT:

Vacaville Classroom Building (Annex) Renovation Project

CONSULTANT TEAM:

TENNEBAUM-MANHEIM ENGINEERS
414 MASON STREET, # 605
SAN FRANCISCO, CA. 94102
(415) 772-9891

STAMP

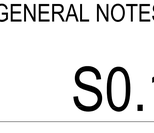

SHEET LEGEND:

ISSUE/REVISION:

NO:	DATE:	DESCRIPTION:
	04/25/2017	ISSUE FOR DD 100%
	06/06/2017	ISSUE FOR CD 50%
	06/30/2017	ISSUE FOR CD 60%
	10/18/2017	DSA BACKCHECK

KEY PLAN:

FILE: 48-C1

IDENTIFICATION STAMP
DIVISION OF THE STATE ARCHITECT
02-116082
AC TCC FLS GBC SSPVL
DATE: 10/31/2017

SCALE:
DATE:
PROJECT NO:
PERMIT APPLICATION NO.:

GENERAL NOTES

S0.1

DRILLED AND GROUTED ANCHORS AND DOWELS

REFER TO SPECIFICATIONS FOR COMPLETE REQUIREMENTS. ALL DRILLED DOWELS SHALL BE REINFORCING STEEL AS DEFINED IN THE SPECIFICATIONS AND AS NOTED ON THIS SHEET. ALL DRILLED ANCHORS SHALL BE ASTM A 193 B7 –THREAD ROD U.O.N. DRILLED DOWELS/ANCHORS IN CONCRETE SHALL BE SET IN HILTI RE–500 –SD OR SIMPSON SET–XP OR APPROVED EQUAL, UNLESS NOTED OTHERWISE ON THE DRAWINGS.

USE OF POLYESTER RESIN SHALL NOT BE PERMITTED. USE EPOXY DOWELS/ANCHORS U.N.O. DRILLED CEMENT–GROUTED DOWELS/ANCHORS. IN CONCRETE SHALL BE INSTALLED USING ONLY PRE–PACKAGED NON–METALIC CEMENTITOUS GROUT IN ACCORDANCE WITH SPECIFICATIONS. WHEN INSTALLING DRILLED DOWELS/ANCHORS IN EXISTING REINFORCED CONCRETE OR IN BRICK, USE CARE AND CAUTION TO AVOID CUTTING OR DAMAGING THE EXISTING REINFORCING BARS. HOLES FOR DRILLED DOWELS/ANCHORS SHALL NOT BE CORED.

HOLE DIAMETERS SHOWN SHALL BE USED UNLESS SPECIFICALLY RECOMMENDED BY MANUFACTURER OF RESIN MATERIAL. WHERE EXISTING REINFORCING STEEL IS ENCOUNTERED, SHIFT THE DOWEL/ANCHOR AS REQUIRED TO AVOID IT. DRILLED DOWELS/ANCHORS SHALL HAVE MINIMUM EMBEDMENTS TABULATED BELOW UNLESS NOTED OTHERWISE ON THE DRAWINGS. THE TESTING LABORATORY SHALL LOAD TEST 100% OF EACH SIZE DOWEL/ANCHOR TO THE LOAD SPECIFIED. IF ANY ONE DOWEL/ANCHOR INSTALLED IN ANY ONE DAYFAILS THIS TEST, ALL DOWELS/ANCHORS OF ALL SIZES INSTALLED THAT DAY SHALL BE TESTED. PERIODIC SPECIAL INSPECTION IS REQUIRED.

MATERIALS	BAR SIZE ANCH ø	MAXIMUM HOLE DIAMETER	MINIMUM EMBEDMENT	PROOF LOAD (POUNDS)
CONC/ REBAR	#3	½"	5½"	3,500
	#4	⅝ "	7"	6,400
	#5	¾ "	9"	14,900
	#6	⅞"	11½"	21,100
	#7	1"	14½"	28,800
	#8	1⅛"	17½"	37,900
	#9	1⅜"	21"	48,000
CONC/ ANCH	3/8"	7/16"	3½"	2,200
	1/2"	9/16"	4"	3370
	5/8"	11/16"	4½"	4600
	3/4"	13/16"	5"	5890
	7/8"	15/16"	6"	7090
	1"	1 1/16"	7"	9350

MATERIALS	BAR SIZE ANCH ø	MAXIMUM HOLE DIAMETER	MIN. EMBED	PROOF LOAD (POUNDS)
BRICK/ REBAR 50psi MIN MORTAR	#3	½"	7 1/2"	1,000
	#4	11/16"	7 1/2"	1,200
	#5	1"	12"	1,500
	#6	1"	12"	1,800
BRICK/ ANCH 50psi MIN MORTAR	3/8"	½"	6"	1,000
	1/2"	11/16"	10"	1,200
	5/8"	27/32"	10"	1,500
	3/4"	1"	12"	1,800

ABBREVIATIONS

ø – DIAMETER
& – AND
@ – AT
C – CENTER LINE
P – PLATE
ABT. – ABOUT
A.B. – ANCHOR BOLT
AESS – ARCHITECTURALLY EXPOSED STRUCTURAL STEEL
A.T.R. – ALL THREAD ROD
BLDG. – BUILDING
BLKG. – BLOCKING
BM. – BEAM
B.S. – BOTH SIDES
BOTT. – BOTTOM
BETW. – BETWEEN
CL – CENTERLINE
CLR. – CLEAR
CMU. – CONCRETE MASONRY UNIT
COL. – COLUMN
C.P. – COMPLETE PENETRATION
CLG. – CEILING
CONC. – CONCRETE
CONN. – CONNECTION
C.J. – CONSTRUCTION JOINT
C.N.J – CONTROL JOINT
CONT. – CONTINUOUS

DET. – DETAIL
DIA. – DIAMETER
DS. – DIAGONAL SHEATHING
DWG. – DRAWING
do – REPEAT STEEL SHAPE

(E) – EXISTING
EA. – EACH
E.F. – EACH FACE
E.S. – EACH SIDE
E.N. – EDGE NAIL
ELEV. – ELEVATION
EMBED. – EMBEDMENT
EPS. – EXPANDED POLYSTYRENE STYROFOAM
EQ. – EQUAL
(E) – EXISTING

F.S. – FAR SIDE
FLG. – FLANGE
FLR. – FLOOR
FTG. – FOOTING
FDN. – FOUNDATION

GA. – GAGE
GALV. – GALVANIZED
G.B. – GRADE BEAM

HORIZ. – HORIZONTAL
HT. – HEIGHT

INFO. – INFORMATION

L.L. – LIVE LOAD
LLH. – LONG LEG HORIZONTAL
LLV. – LONG LEG VERTICAL
LSL. – LAMINATED STRAND LUMBER
M.B. – MACHINE BOLT
MAX. – MAXIMUM
MIN. – MINIMUM

N.S. – NEAR SIDE
(N) – NEW
N.I.C. – NOT IN CONTRACT
N.T.S. – NOT TO SCALE

O.C. – ON CENTER
OPN'G – OPENING
O.H. – OPPOSITE HAND
O.F. – OUTSIDE FACE
O.S.H. – OVER SIZED HOLE

PL – PLATE
PLYWD – PLYWOOD
P.W. – PLYWOOD
P.T.W. – PRESSURE TREATED WOOD

REINF. – REINFORCEMENT
R.C. – REINFORCED CONCRETE
REQ. – REQUIRED

SECT. – SECTION
S.A.D. – SEE ARCHITECTURAL DRAWING
SHT. – SHEET
SIM. – SIMILAR
S.B. – SOLID BLOCKING
SPECS. – SPECIFICATIONS
SQ. – SQUARE
STAGG. – STAGGERED
STIFF. – STIFFENER
STL. – STEEL
SYMM. – SYMMETRICAL

T. – TOP
T.D.– TIE DOWN
T.N. – TOE NAIL
T.O.C. – TOP OF CONCRETE
T.O.S. – TOP OF STEEL
TYP. – TYPICAL

U.O.N. – UNLESS OTHERWISE NOTED
U.N.O. – UNLESS NOTED OTHERWISE

V.I.F. – VERIFY IN FIELD
VERT. – VERTICAL

WP – WATERPROOFING
W.A. – WEDGE ANCHOR
W/ – WITH
W.P. – WORK POINT

OWNER:

Solano Community College District
2000 North Village Parkway
Vacaville, CA 95688

ARCHITECT:

CA ARCHITECTS
475 Gate Five Road, Suite 107
Sausalito, CA 94965
T 415.331.7655
F 415.331.7656

PROJECT:

Vacaville Classroom Building (Annex) Renovation Project

CONSULTANT TEAM:

TENNEBAUM–MANHEIM ENGINEERS
414 MASON STREET, # 605
SAN FRANCISCO, CA. 94102
(415) 772–9891

STAMP

SHEET LEGEND:

ISSUE/REVISION:

NO:	DATE:	DESCRIPTION:
	04/25/2017	ISSUE FOR DD 100%
	06/06/2017	ISSUE FOR CD 50%
	06/30/2017	ISSUE FOR CD 60%
	10/18/2017	DSA BACKCHECK

KEY PLAN:

FILE: 48-C1

IDENTIFICATION STAMP
DIVISION OF THE STATE ARCHITECT

02-116082

AC ICC FLS GBC SS PVL

DATE: 10/31/2017

SCALE:
DATE:
PROJECT NO:
PERMIT APPLICATION NO.:

GENERAL NOTES & ABBREVIATIONS

S0.2

TABLE 2304.9.1
FASTENING SCHEDULE

CONNECTION	FASTENING [a,m]	LOCATION
1. JOIST TO SILL OR GIRDER	3–8d COMMON (2½"x0.131") 3–3"x0.131" NAILS 3–3" 14 GAGE STAPLES	TOENAIL
2. BRIDGING TO JOIST	2–8d COMMON (2½"x0.131") 2–3"x0.131" NAILS 2–3" 14 GAGE STAPLES	TOENAIL EACH END
3. 1"x6" SUBFLOOR OR LESS TO EACH JOIST	2–8d COMMON (2½"x0.131")	FACE NAIL
4. WIDER THAN 1"x6" SUBFLOOR TO EACH JOIST	3–8d COMMON (2½"x0.131")	FACE NAIL
5. 2" SUBFLOOR TO JOIST OR GIRDER	2–16d COMMON (3½"x0.162")	BLIND & FACE NAIL
6. SOLE PLATE TO JOIST OR BLOCKING	16d (3½"x0.135") AT 16"o.c. 3"x0.131" NAILS AT 8"o.c. 3" 14 GAGE STAPLES AT 12"o.c.	TYPICAL FACE NAIL
SOLE PLATE TO JOIST OR BLOCKING AT BRACED WALL PANEL	3–16d (3½"x0.135") AT 16" 4–3"x0.131" NAILS AT 16" 4–3" 14 GAGE STAPLES PER 16"	BRACED WALL PANEL
7. TOP PLATE TO STUD	2–16d COMMON (3½"x0.162") 3–3"x0.131" NAILS 3–3" 14 GAGE STAPLES	END NAIL
8. STUD TO SOLE PLATE	4–8d COMMON (2½"x0.131") 4–3"x0.131" NAILS 3–3" 14 GAGE STAPLES	TOENAIL
	2–16d COMMON (3½"x0.162") 3–3"x0.131" NAILS 3–3" 14 GAGE STAPLES	END NAIL
9. DOUBLE STUD	16d (3½"x0.135") AT 24"o.c. 3"x0.131" NAILS AT 8"o.c. 3" 14 GAGE STAPLES AT 8"o.c.	FACE NAIL
10. DOUBLE TOP PLATES	16d (3½"x0.135") AT 16"o.c. 3"x0.131" NAILS AT 12"o.c. 3" 14 GAGE STAPLES AT 12"o.c.	TYPICAL FACE NAIL
DOUBLE TOP PLATES	8–16d COMMON (3½"x0.162") 12–3"x0.131" NAILS 12–3" 14 GAGE STAPLES	LAP SPLICE
11. BLOCKING BETWEEN JOISTS OR RAFTERS TO TOP PLATE	3–8d COMMON (2½"x0.131") 3–3"x0.131" NAILS 3–3" 14 GAGE STAPLES	TOENAIL
12. RIM JOIST TO TOP PLATE	8d (2½"x0.131") AT 6"o.c. 3"x0.131" NAILS AT 6"o.c. 3" 14 GAGE STAPLES AT 6"o.c.	TOENAIL
13. TOP PLATES, LAPS AND INTERSECTIONS	2–16d COMMON (3½"x0.162") 3–3"x0.131" NAILS 3–3" 14 GAGE STAPLES	FACE NAIL
14. CONTINUOUS HEADER, TWO PIECES	16d COMMON (3½"x0.162")	16"o.c. ALONG EDGE
15. CEILING JOISTS TO PLATE	3–8d COMMON (2½"x0.131") 5–3"x0.131" NAILS 5–3" 14 GAGE STAPLES	TOENAIL
16. CONTINUOUS HEADER TO STUD	4–8d COMMON (2½"x0.131")	TOENAIL
17. CEILING JOISTS, LAPS OVER PARTITIONS (SEE SECTION 2308.10.4.1, TABLE 2308.10.4.1)	3–16d COMMON (3½"x0.162") MINIMUM. TABLE 2308.10.4.1 4–3"x0.131" NAILS 4–3" 14 GAGE STAPLES	FACE NAIL
18. CEILING JOISTS TO PARALLEL RAFTERS (SEE SECTION 2308.10.4.1, TABLE 2308.10.4.1)	3–16d COMMON (3½"x0.162") MINIMUM. TABLE 2308.10.4.1 4–3"x0.131" NAILS 4–3" 14 GAGE STAPLES	FACE NAIL
19. RAFTER TO PLATE (SEE SECTION 2308.10.4.1, TABLE 2308.10.4.1)	3–8d COMMON (2½"x0.131") 3–3"x0.131" NAILS 3–3" 14 GAGE STAPLES	TOENAIL
20. 1"DIAGONAL BACE TO EACH STUD AND PLATE	2–8d COMMON (2½"x0.131") 2–3"x0.131" NAILS 3–3" 14 GAGE STAPLES	FACE NAIL
21. 1"x8" SHEATHING TO EACH BEARING	3–8d COMMON (2½"x0.131")	FACE NAIL
22. WIDER THAN 1"x8" SHEATHING TO EACH BEARING	3–8d COMMON (2½"x0.131")	FACE NAIL
23. BUILT–UP CORNER STUDS	16d COMMON (3½"x0.162") 3"x0.131" NAILS 3" 14 GAGE STAPLES	24"o.c. 16"o.c. 16"o.c.
24. BUILT–UP GIRDER AND BEAMS	20d COMMON (4"x0.192")32"o.c. 3"x0.131" NAIL AT 24"o.c. 3" 14 GAGE STAPLES AT 24"o.c.	FACE NAIL AT TOP & BOTTOM STAGGERED ON OPPOSITE SIDES
	2–20d COMMON (4"x0.192") 3–3"x0.131" NAILS 3–3" 14 GAGE STAPLES	FACE NAIL AT ENDS AND AT EACH SPLICE

TABLE 2304.9.1 CONTINUED
FASTENING SCHEDULE

CONNECTION	FASTENING [a,m]	LOCATION
25. 2" PLANKS	16d COMMON (3½"x0.162")	AT EACH BEARING
26. COLLAR TIE TO RAFTER	3–10d COMMON (3"x0.148") 4–3"x0.131" NAILS 4–3" 14 GAGE STAPLES	FACE NAIL
27. JACK RAFTER TO HIP	3–10d COMMON (3"x0.148") 4–3"x0.131" NAILS 4–3" 14 GAGE STAPLES	TOENAIL
	2–16d COMMON (3½"x0.162") 3–3"x0.131" NAILS 3–3" 14 GAGE STAPLES	FACE NAIL
28. ROOF RAFTER TO 2–BY RIDGE BEAM	2–16d COMMON (3½"x0.162") 3–3"x0.131" NAILS 3–3" 14 GAGE STAPLES	TOENAIL
	2–16d COMMON (3½"x0.162") 3–3"x0.131" NAILS 3–3" 14 GAGE STAPLES	FACE NAIL
29. JOIST TO BAND JOIST	3–16d COMMON (3½"x0.162") 4–3"x0.131" NAILS 4–3" 14 GAGE STAPLES	FACE NAIL
30. LEDGER STRIP	3–16d COMMON (3½"x0.162") 4–3"x0.131" NAILS 4–3" 14 GAGE STAPLES	FACE NAIL
31. WOOD STRUCTURAL PANELS AND PARTICLEBOARD [b] SUBFLOOR, ROOF AND WALL SHEATHING (TO FRAMING)	½" AND LESS 6d [c,1] 2⅜"x0.113"NAIL [n] 1¾"16 GAGE [o] 19/32" TO ¾" 8d [d] OR 6d [e] 2⅜"x0.113"NAIL [p] 2"16 GAGE [p] ⅞" TO 1" 8d [c] 1⅛" TO 1¼" 10d [d] OR 8d [e]	
SINGLE FLOOR (COMBINATION SUBFLOOR–UNDERLAYMENT TO FRAMING)	¾" AND LESS 6d [e] ⅞" TO 1" 8d [e] 1⅛" TO 1¼" 10d [d] OR 8d [e]	
32. PANEL SIDING (TO FRAMING)	½" OR LESS 6d [f] ⅝" 8d [f]	
33. FIBERBOARD SHEATHING [g]	½" NO. 11 GAGE ROOFING NAIL [h] 6d COMMON NAIL (2"x0.113") NO. 16 GAGE [i]	
	25/32" NO. 11 GAGE ROOFING NAIL [h] 8d COMMON NAIL (2½"x0.113") NO. 16 GAGE [i]	
34. INTERIOR PANELING	¼" 4d [j] ⅜" 6d [k]	

FOR SI: 1 INCH = 25.4 mm.

A. COMMON OR BOX NAILS ARE PERMITTED TO BE USED EXCEPT WHERE OTHERWISE STATED.
B. NAILS SPACED AT 6 INCHES ON CENTER AT EDGES, 12 INCHES AT INTERMEDIATE SUPPORTS EXCEPT 6 INCHES AT SUPPORTS WHERE SPANS ARE 48 INCHES OR MORE. FOR NAILING OF WOOD STRUCTURAL PANEL AND PARTICLEBOARD DIAPHRAGMS AND SHEAR WALLS, REFER TO SECTION 2305. NAILS FOR WALL SHEATHING ARE PERMITTED TO BE COMMON, BOX OR CASING.
C. COMMON OR DEFORMED SHANK (6d–2"x0.113"; 8d–2½"x0.131"; 10d–3"x0.148").
D. COMMON (6d–2"x0.113"; 8d– 2½"x0.131"; 10d–3"x0.148").
E. DEFORMED SHANK (6d–2"x0.113"; 8d–2½"x0.131"; 10d–3"x0.148").
F. CORROSION–RESISTANT SIDING (6d–1⅞"x0.106"; 8d–2⅜"x0.128") OR CASING (6d–2"x0.099"; 8d–2½"x0.113") NAIL.
G. FASTENER SPACED 3 INCHES ON CENTER AT EXTERIOR EDGES AND 6 INCHES ON CENTER AT INTERMEDIATE SUPPORTS, WHEN USED AS STRUCTURAL SHEATHING. SPACING SHALL BE 6 INCHES ON CENTER ON THE EDGES AND 12 INCHES ON CENTER AT INTERMEDIATE SUPPORTS FOR NONSTRUCTURAL APPLICATIONS.
H. CORROSION–RESISTANT ROOFING NAILS WITH 7/16–INCH–DIAMETER HEAD AND 1½–INCH LENGTH FOR ½–SHEATHING AND 1¾–INCH LENGTH FOR 25/32–INCH SHEATHING.
I. CORROSION–RESISTANT STAPLES WITH NOMINAL 7/16–INCH CROWN AND 1⅛–INCH LENGTH FOR ½–INCH SHEATHING AND 1½–INCH LENGTH FOR 25/32–INCH SHEATHING. PANEL SUPPORTS AT 16 INCHES (20 INCHES IF STRENGTH AXIS IN THE LONG DIRECTION OF THE PANEL, UNLESS OTHERWISE MARKED)
J. CASING (1½"x0.080") OR FINISH (1½x0.072") NAILS SPACED 6 INCHES ON PANEL EDGES. 12 INCHES AT INTERMEDIATE SUPPORTS.
K. PANEL SUPPORTS AT 24 INCHES. CASING OR FINISH NAILS SPACED 6 INCHES ON PANEL EDGES, 12 INCHES AT INTERMEDIATE SUPPORTS.
L. FOR ROOF SHEATHING APPLICATIONS, 8d NAILS (2½"x0.113") ARE THE MINIMUM REQUIRED FOR WOOD STRUCTURAL PANELS.
M. STAPLES SHALL HAVE A MINIMUM CROWN WIDTH OF 7/16 INCH.
N. FOR ROOF SHEATHING APPLICATIONS, FASTENERS SPACED 4 INCHES ON CENTER AT EDGES, 8 INCHES AT INTERMEDIATE SUPPORTS.
O. FASTENERS SPACED 4 INCHES ON CENTER AT EDGES, 8 INCHES AT INTERMEDIATE SUPPORTS FOR SUBFLOOR AND WALL SHEATHING AND 3 INCHES ON CENTER AT EDGES, 6 INCHES AT INTERMEDIATE SUPPORTS FOR ROOF SHEATHING.
P. FASTENERS SPACED 4 INCHES ON CENTER AT EDGES, 8 INCHES AT INTERMEDIATE SUPPORTS.
Q. NAILS AND FASTENERS, INCLUDING BOLTS NUTS AND WASHERS, IN PRESSURE TREATED WOOD SHALL BE HOT DIPPED GALVANIZED.

NAIL SCHEDULE
N.T.S. **9**

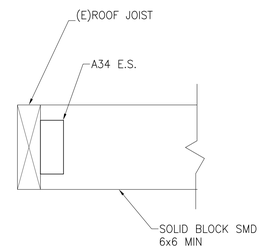

TYPICAL DETAIL AT SOLID BLOCK
NTS **7**

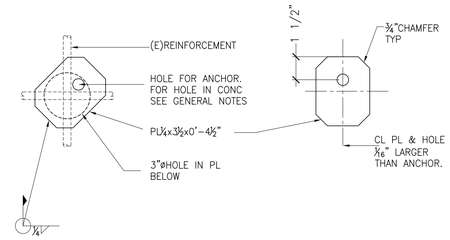

TYPICAL DETAIL AT PLATE WASHER
NTS **6**

NAIL SIZE	LENGTH INCHES	DIAMETER INCHES
6d	2	0.113
8d	2½	0.131
10d	3	0.148
12d	3¼	0.148
16d	3½	0.162
20d	4	0.192

NAILS SHALL BE COMMON NAILS CONFORMING TO NER272 & ASTM F1667 W/ FULL ROUND HEADS

NAIL SIZE
N.T.S. **5**

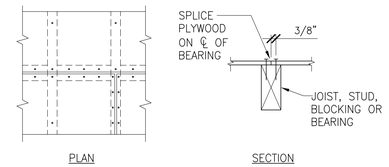

PLYWOOD SHEETS ARE TO BE AS LARGE AS POSSIBLE. JOINTS ARE TO BE CENTERED OVER BEARING. SHEET SIZES LESS THAN 24" IN DIMENSION NOT PERMITTED UNLESS APPROVAL IS GIVEN BY THE ARCHITECT. STAGGER ALL END JOINTS OF SHEATHING. OUTSIDE FACE GRAINS TO RUN PERPINDICULAR TO BEARING. BLOCK ALL JOINTS AND EDGES.

TYPICAL PLYWOOD SHEATHING
NTS **4**

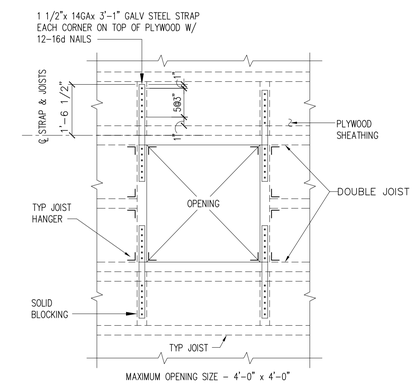

TYP. DIAPHRAGM OPENING
N.T.S. **2**

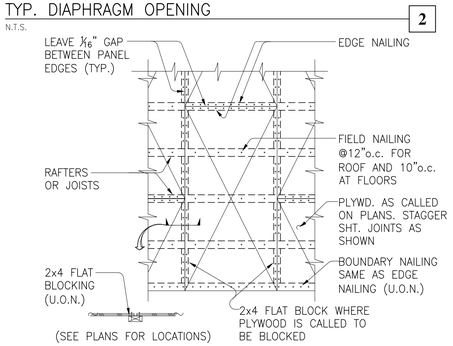

TYP, HORIZONTAL PLYWOOD NAILING (JOIST OR RAFTERS)
N.T.S. **1**

OWNER:

Solano Community College District
2000 North Village Parkway
Vacaville, CA 95688

ARCHITECT:

CA ARCHITECTS
475 Gate Five Road, Suite 107
Sausalito, CA 94965
T 415.331.7655
F 415.331.7656

PROJECT:

Vacaville Classroom Building (Annex) Renovation Project

CONSULTANT TEAM:

TENNEBAUM–MANHEIM ENGINEERS
414 MASON STREET, # 605
SAN FRANCISCO, CA 94102
(415) 772–9891

STAMP

SHEET LEGEND:

ISSUE/REVISION:

NO:	DATE:	DESCRIPTION:
	04/25/2017	ISSUE FOR DD 100%
	06/06/2017	ISSUE FOR CD 50%
	06/30/2017	ISSUE FOR CD 60%
	10/18/2017	DSA BACKCHECK

KEY PLAN:

FILE: 48-C1
IDENTIFICATION STAMP
DIVISION OF THE STATE ARCHITECT
02-116082
AC JCC FLS GBC SS PVL
DATE: 10/31/2017

SCALE:
DATE:
PROJECT NO:
PERMIT APPLICATION NO.:

TYPICAL DETAILS

S1.0

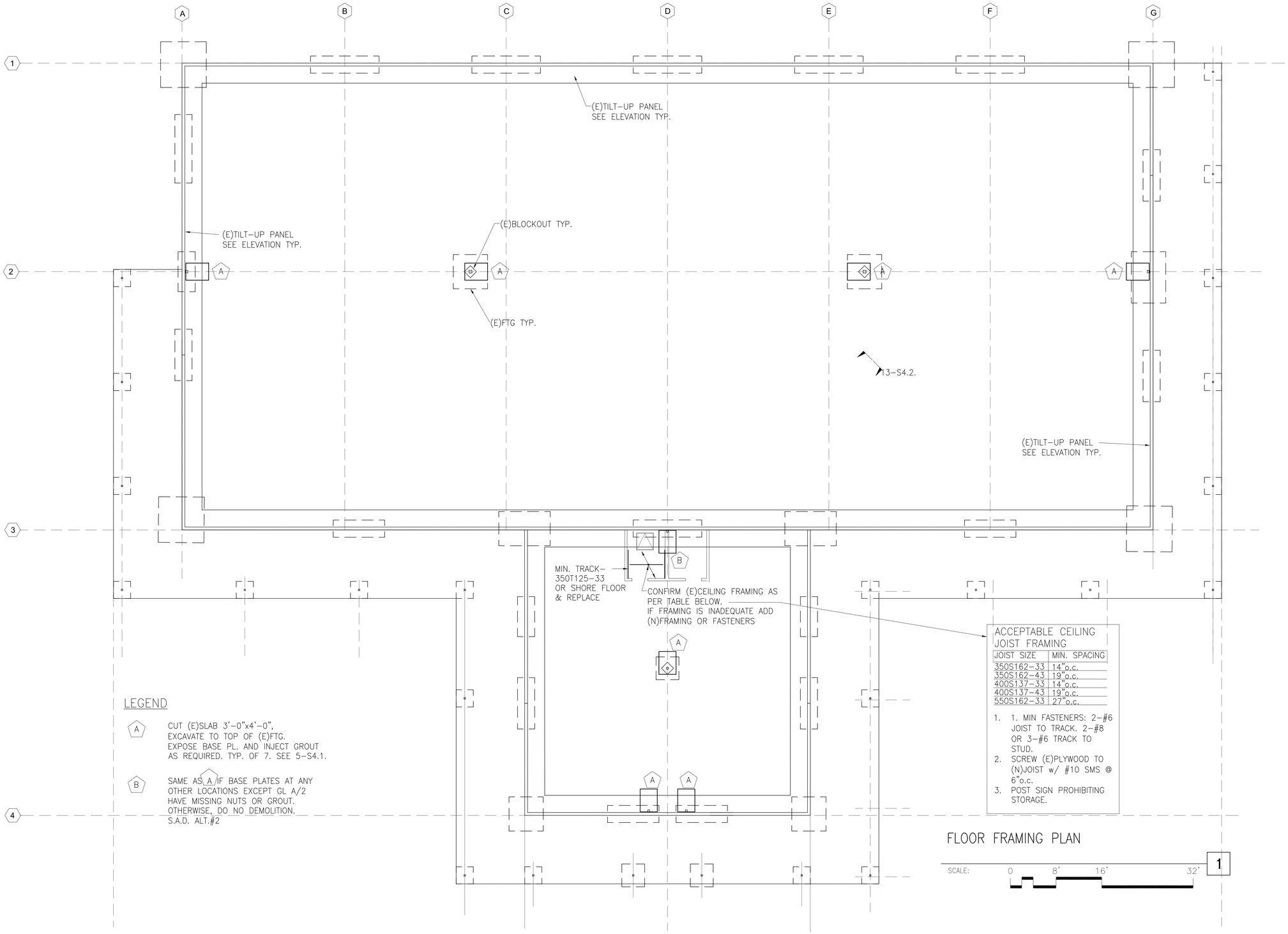

OWNER:

Solano Community College District
2000 North Village Parkway
Vacaville, CA 95688

ARCHITECT:

CA ARCHITECTS
475 Gate Five Road, Suite 107
Sausalito, CA 94965
T 415.331.7655
F 415.331.7656

PROJECT:

Vacaville Classroom Building
(Annex) Renovation Project

CONSULTANT TEAM:

TENNEBAUM-MANHEIM ENGINEERS
414 MASON STREET, # 605
SAN FRANCISCO, CA. 94102
(415) 772-9891

STAMP

SHEET LEGEND:

ISSUE/REVISION:

NO:	DATE:	DESCRIPTION:
	04/25/2017	ISSUE FOR DD 100%
	06/06/2017	ISSUE FOR CD 50%
	06/30/2017	ISSUE FOR CD 60%
	10/18/2017	DSA BACKCHECK

KEY PLAN:

FILE: 48-C1
IDENTIFICATION STAMP
DIVISION OF THE STATE ARCHITECT
02-116082
AC ICC FLS GBC ss PVL
DATE: 10/31/2017

SCALE:
DATE:
PROJECT NO:
PERMIT APPLICATION NO.:

1st FLOOR AND FOUNDATION PLAN

S2.1

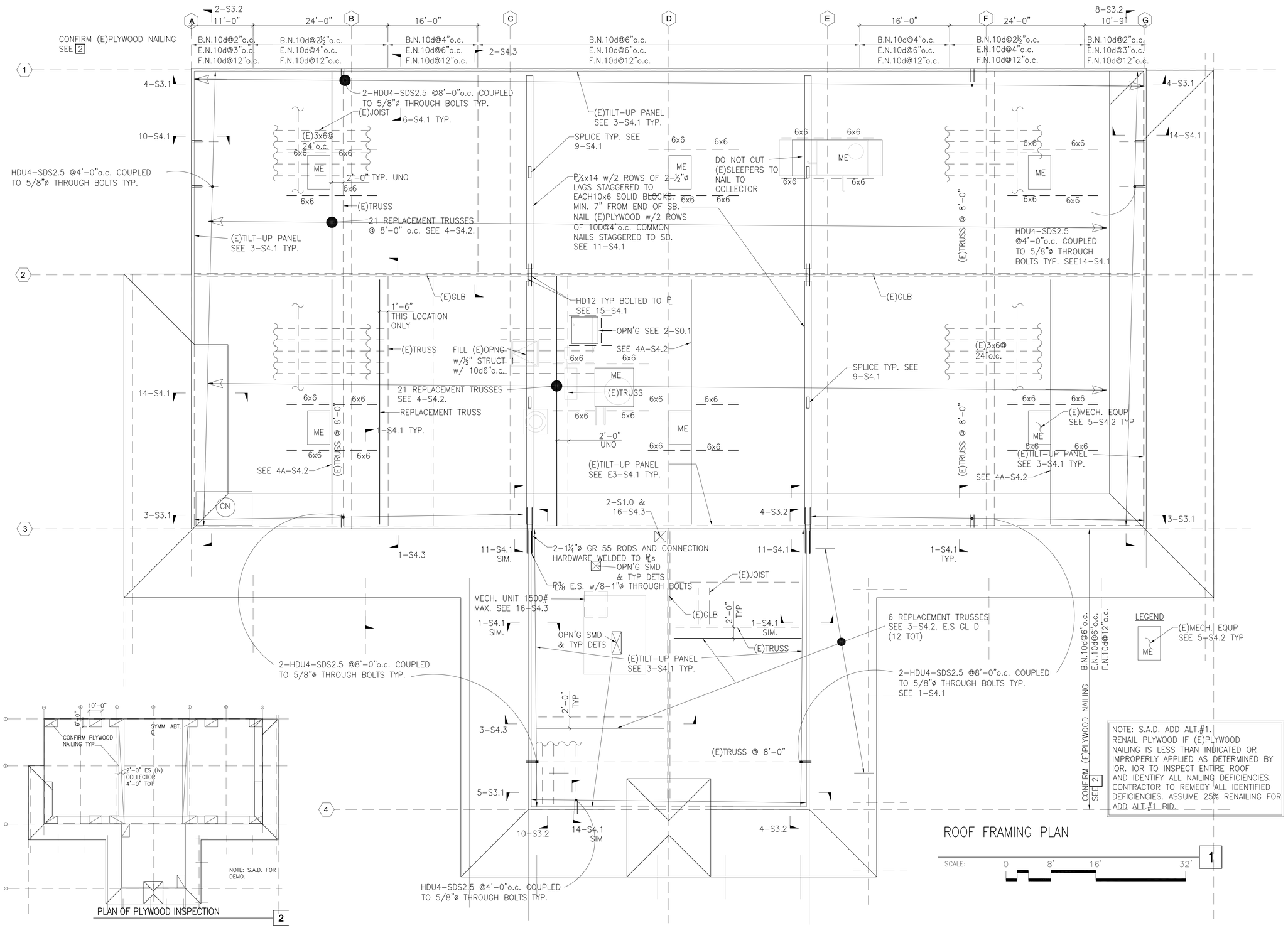

NOTE: S.A.D. ADD ALT.#1. RENAIL PLYWOOD IF (E)PLYWOOD NAILING IS LESS THAN INDICATED OR IMPROPERLY APPLIED AS DETERMINED BY IOR. IOR TO INSPECT ENTIRE ROOF AND IDENTIFY ALL NAILING DEFICIENCIES. CONTRACTOR TO REMEDY ALL IDENTIFIED DEFICIENCIES. ASSUME 25% RENAILING FOR ADD ALT.#1 BID.

OWNER:

Solano Community College District
2000 North Village Parkway
Vacaville, CA 95688

ARCHITECT:

CA ARCHITECTS
475 Gate Five Road, Suite 107
Sausalito, CA 94965
T 415.331.7655
F 415.331.7656

PROJECT:

Vacaville Classroom Building (Annex) Renovation Project

CONSULTANT TEAM:

TENNEBAUM-MANHEIM ENGINEERS
414 MASON STREET, # 605
SAN FRANCISCO, CA. 94102
(415) 772-9891

STAMP

REGISTERED PROFESSIONAL ENGINEER
No. 2973
Exp.6/30/18
STRUCTURAL
STATE OF CALIFORNIA

SHEET LEGEND:

ISSUE/REVISION:

NO:	DATE:	DESCRIPTION:
	04/25/2017	ISSUE FOR DD 100%
	06/06/2017	ISSUE FOR CD 50%
	06/30/2017	ISSUE FOR CD 60%
	10/18/2017	DSA BACKCHECK

KEY PLAN:

FILE: 48-C1
IDENTIFICATION STAMP
DIVISION OF THE STATE ARCHITECT
02-116082
AC TCC FLS GBC SS PVL
DATE: 10/31/2017

SCALE:
DATE:
PROJECT NO:
PERMIT APPLICATION NO.:

ROOF FRAMING PLAN

S2.2

Time: 11:30:30
Date: 5/22/2017
Scale: 1 = 1(PS)
Drawing File: C:\CAD Data\TME\SCC Vacaville\150409_ICF_roofPlan.dwg.DWG (Greenwood)

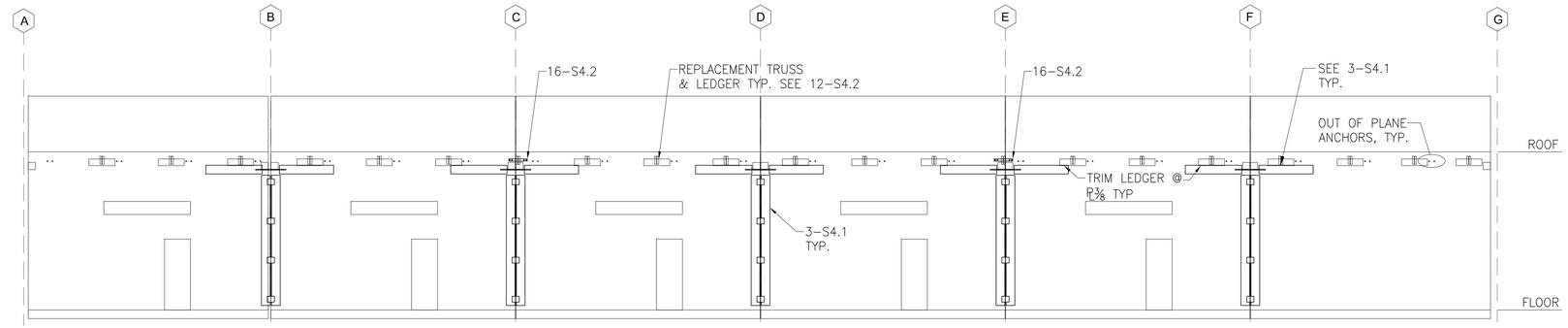

ELEVATION G.L. 1

SCALE: 0 8' 16' 32'

4

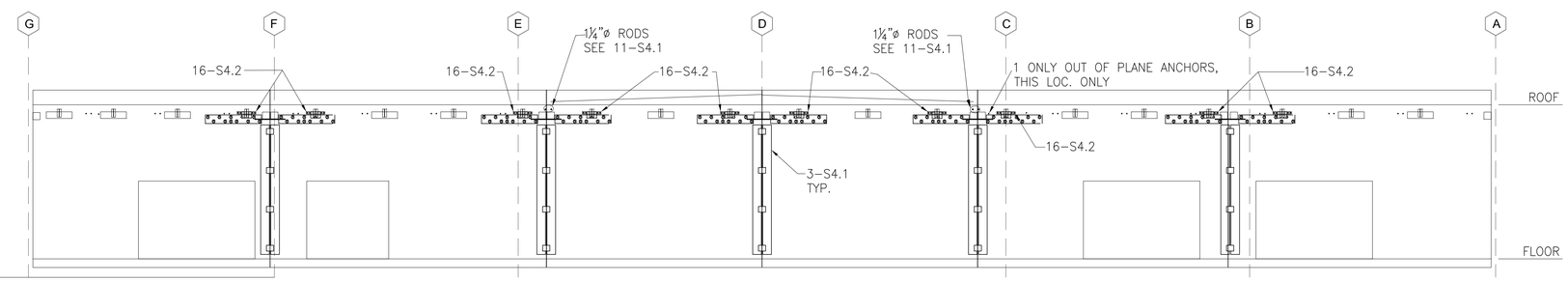

ELEVATION G.L. 3

SCALE: 0 8' 16' 32'

3

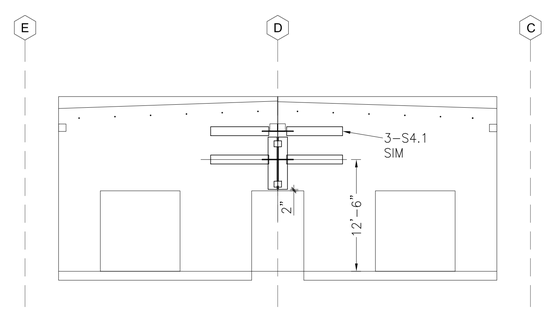

ELEVATION G.L. 4

SCALE: 0 8' 16' 32'

5

OWNER:

Solano Community College District
2000 North Village Parkway
Vacaville, CA 95688

ARCHITECT:

CA ARCHITECTS
475 Gate Five Road, Suite 107
Sausalito, CA 94965
T 415.331.7655
F 415.331.7656

PROJECT:

Vacaville Classroom Building
(Annex) Renovation Project

CONSULTANT TEAM:

TENNEBAUM–MANHEIM ENGINEERS
414 MASON STREET, # 605
SAN FRANCISCO, CA. 94102
(415) 772–9891

STAMP:

REGISTERED PROFESSIONAL ENGINEER
No. 2973
Exp.6/30/18
STRUCTURAL
STATE OF CALIFORNIA

SHEET LEGEND:

ISSUE/REVISION:

NO:	DATE:	DESCRIPTION:
	04/25/2017	ISSUE FOR DD 100%
	06/06/2017	ISSUE FOR CD 50%
	06/30/2017	ISSUE FOR CD 60%
	10/18/2017	DSA BACKCHECK

KEY PLAN:

FILE: 48-C1

IDENTIFICATION STAMP
DIVISION OF THE STATE ARCHITECT

02-116082

AC TCC FLS GBC SS PVL

DATE: 10/31/2017

SCALE:
DATE:
PROJECT NO:
PERMIT APPLICATION NO.:

WALL ELEVATIONS

S3.1

Time: 12:16:21
Date: 5/22/2017
Scale: 1" = 1'(PS)
Drawing File: C:\CAD Data\TME\SCC Vacaville\S3.1_S3.2.dwg.DWG (Greenwood)

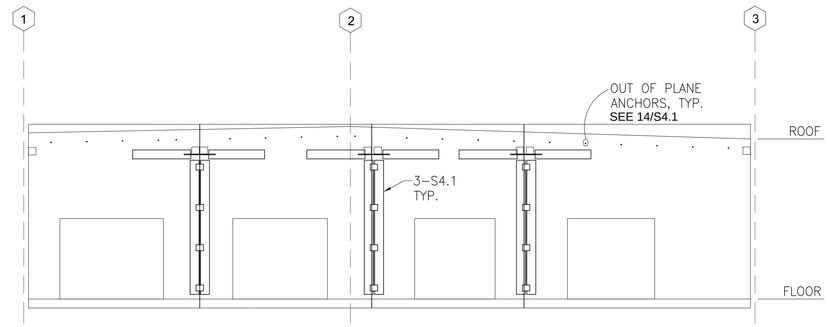

ELEVATION G.L. G

SCALE: 0 8' 16' 32'

8

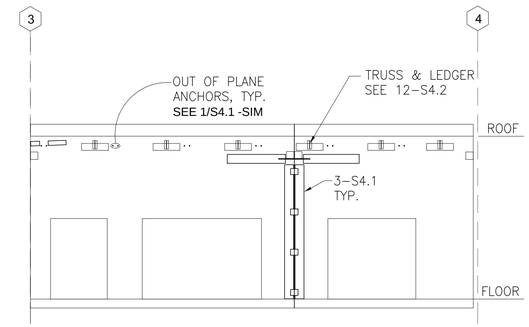

ELEVATION G.L. D.8

SCALE: 0 8' 16' 32'

4

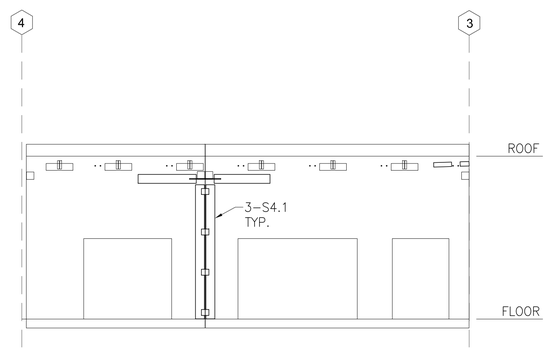

ELEVATION G.L. C.2

SCALE: 0 8' 16' 32'

10

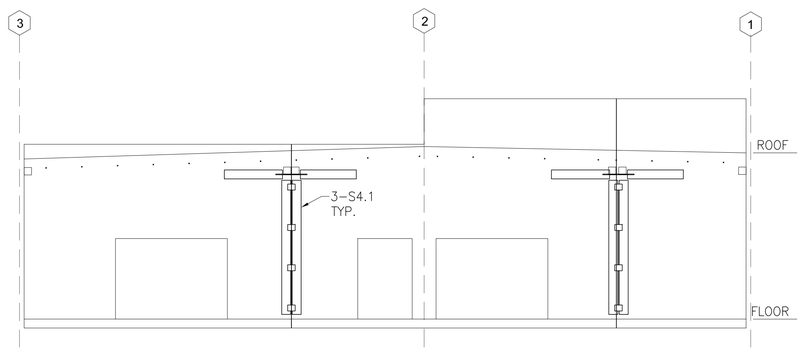

ELEVATION G.L. A

SCALE: 0 8' 16' 32'

2

OWNER:

Solano Community College District
2000 North Village Parkway
Vacaville, CA 95688

ARCHITECT:

CA ARCHITECTS
475 Gate Five Road, Suite 107
Sausalito, CA 94965
T 415.331.7655
F 415.331.7656

PROJECT:

Vacaville Classroom Building
(Annex) Renovation Project

CONSULTANT TEAM:

TENNEBAUM–MANHEIM ENGINEERS
414 MASON STREET, # 605
SAN FRANCISCO, CA. 94102
(415) 772–9891

STAMP

SHEET LEGEND:

ISSUE/REVISION:

NO:	DATE:	DESCRIPTION:
	04/25/2017	ISSUE FOR DD 100%
	06/06/2017	ISSUE FOR CD 50%
	06/30/2017	ISSUE FOR CD 60%
	10/18/2017	DSA BACKCHECK

KEY PLAN:

FILE: 48-C1

IDENTIFICATION STAMP
DIVISION OF THE STATE ARCHITECT

02-116082

AC ICC FLS GBC SS PVL

DATE: 10/31/2017

SCALE:
DATE:
PROJECT NO:
PERMIT APPLICATION NO.:

WALL ELEVATIONS

S3.2

Time: 12:16:21
Date: 5/22/2017
Scale: 1:1(PS)
Drawing File: C:\CAD Data\TME\SCC Vacaville\S3.1_S3.2.dwg.DWG (Greenwood)

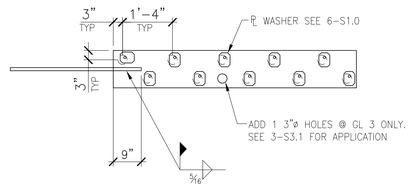

SECTION 16
1/2"=1'-0"

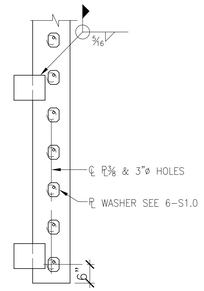

SECTION 12
1/2"=1'-0"

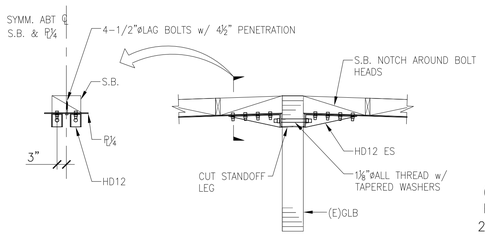

SECTION 15
1/2"=1'-0"

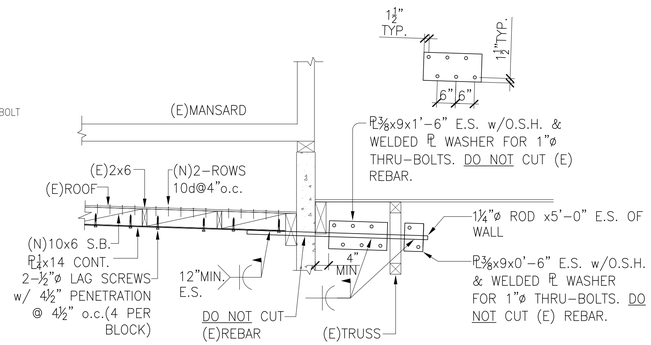

SECTION 11
1/2"=1'-0"

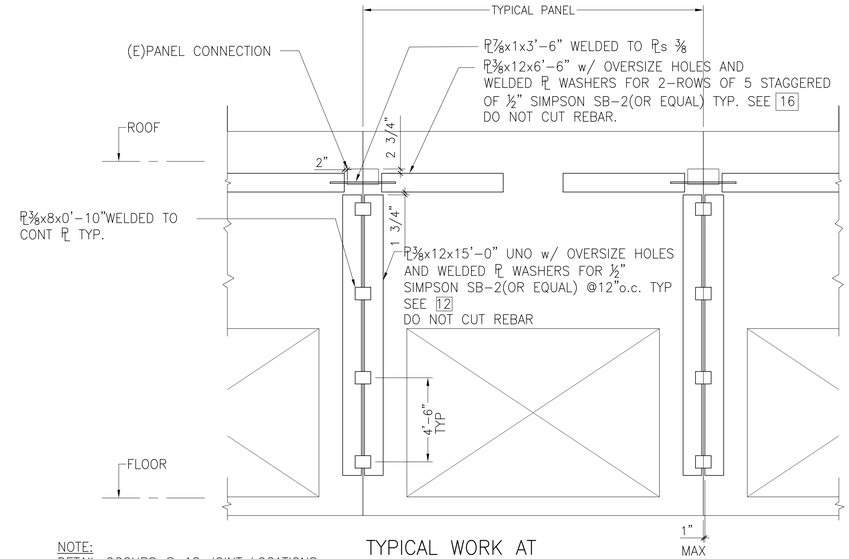

NOTE:
DETAIL OCCURS @ 18 JOINT LOCATIONS.

TYPICAL WORK AT TILT-UP PANELS 3
1/4"=1'-0"

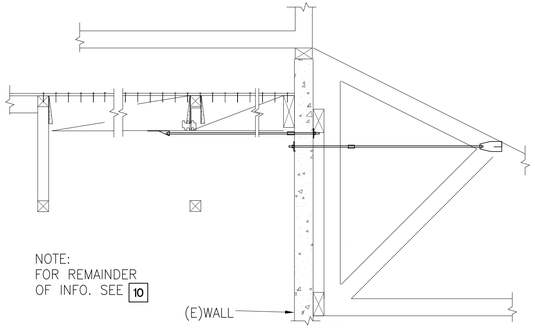

SECTION 14
1/2"=1'-0"

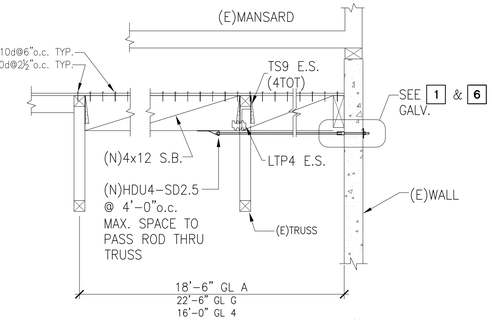

SECTION at OUT OF PLANE WALL RESTRAINT 10
1/2"=1'-0"

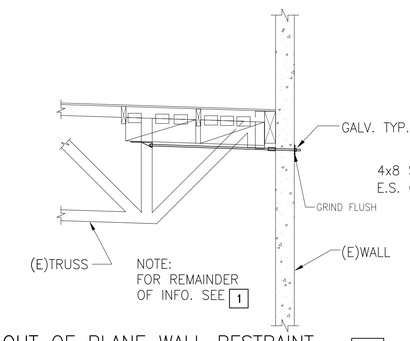

SECTION at OUT OF PLANE WALL RESTRAINT 6
1/2"=1'-0"

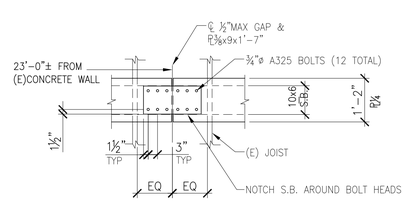

REFLECTED PLAN @ COLLECTOR SPLICE 9
1/2"=1'-0"

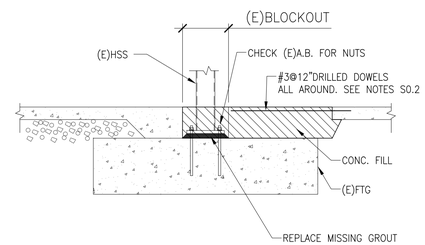

TYPICAL DETAIL AT HSS BASE 5
1/2"=1'-0"

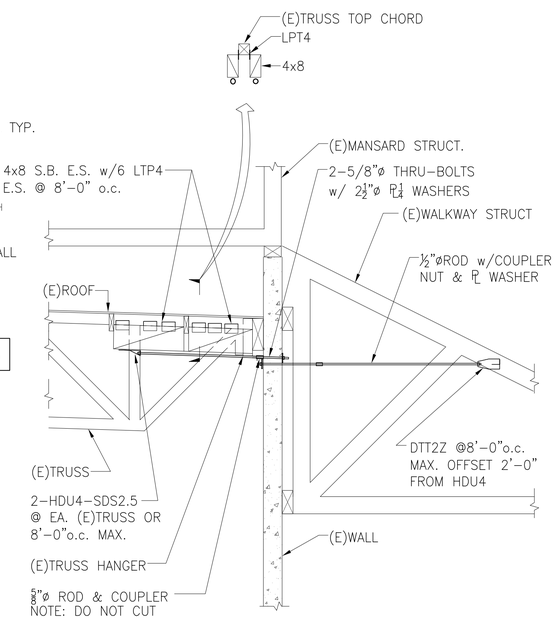

WALL SECTION 1
1/2"=1'-0"

OWNER:

Solano Community College District
2000 North Village Parkway
Vacaville, CA 95688

ARCHITECT:

CA ARCHITECTS
475 Gate Five Road, Suite 107
Sausalito, CA 94965
T 415.331.7655
F 415.331.7656

PROJECT:

Vacaville Classroom Building (Annex) Renovation Project

CONSULTANT TEAM:

TENNEBAUM-MANHEIM ENGINEERS
414 MASON STREET, # 605
SAN FRANCISCO, CA. 94102
(415) 772-9891

STAMP

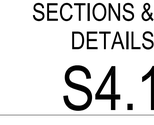

SHEET LEGEND:

ISSUE/REVISION:

NO:	DATE:	DESCRIPTION:
	04/25/2017	ISSUE FOR DD 100%
	06/06/2017	ISSUE FOR CD 50%
	06/30/2017	ISSUE FOR CD 60%
	10/18/2017	DSA BACKCHECK

KEY PLAN:

FILE: 48-C1
IDENTIFICATION STAMP
DIVISION OF THE STATE ARCHITECT
02-116082
AC TCC FLS GBC SSPVL
DATE: 10/31/2017

SCALE:
DATE:
PROJECT NO:
PERMIT APPLICATION NO.:

SECTIONS & DETAILS

S4.1

Time: 13:41:50
Date: 5/22/2017
Scale: 1=1(PS)
Drawing File: C:\CAD Data\TME\SCC Vacaville\S4_1.dwg.DWG (Greenwood)

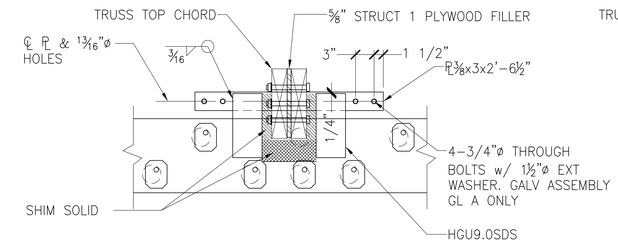

SECTION 16
1"=1'-0"

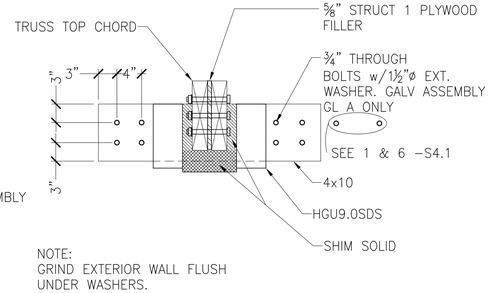

TYP. LEDGER ELEVATION @ (N) TRUSS 12
1"=1'-0"

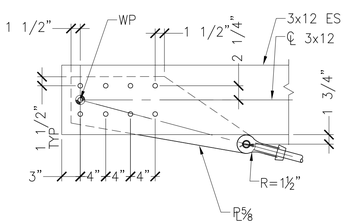

SECTION 15
1"=1'-0"

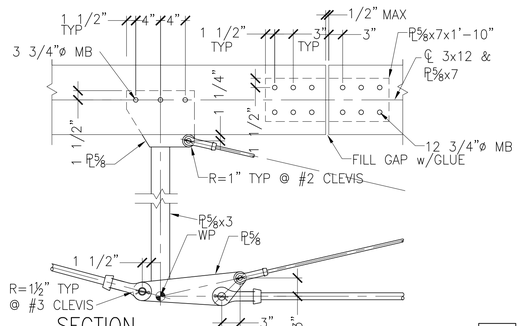

SECTION 11
1"=1'-0"

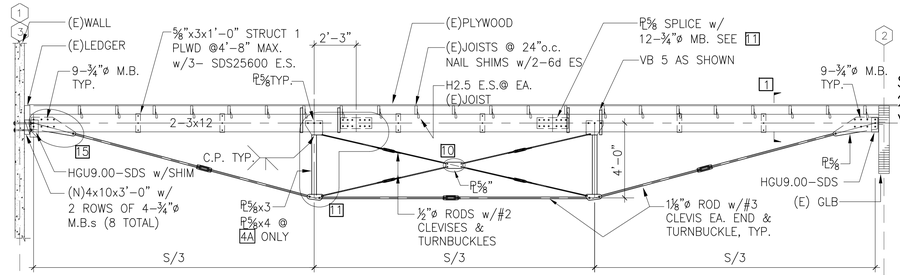

NOTES:
1. REMOVE & REPLACE T-BAR CEILING.
2. USE 1¼"ø PIN w/ ¼" COTTERS FOR #3 CLEVIS.
3. USE ¾"ø PIN w/ ¼" COTTERS FOR #2 CLEVIS
4. ALL (N)LUMBER DF #1. 16% MOISTURE CONTENT.
5. USE 5/8" STRUCT 1 PLYWOOD FILLER AT EACH BOLTED CONNECTION, 12" DEEP AND EXTENDING 3" BEYOND LAST BOLT.

TYPICAL REPLACEMENT 45 FT & 36 FT TRUSS 4A 4
1/4"=1'-0"

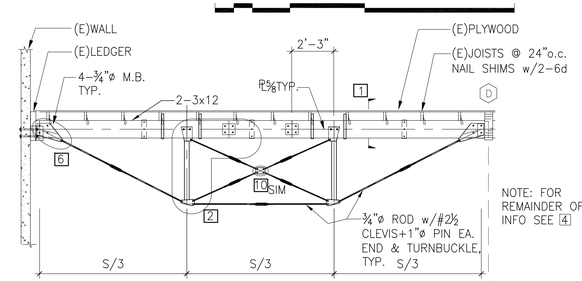

NOTE: FOR REMAINDER OF INFO SEE 4

TYPICAL REPLACEMENT 24'-6" TRUSS 3
1/4"=1'-0"

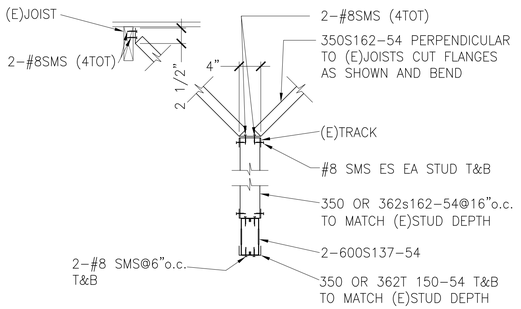

SECTION 14
1"=1'-0"

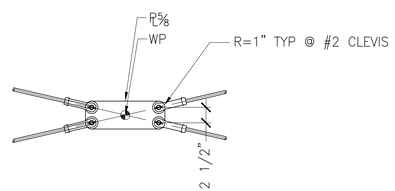

SECTION 10
1"=1'-0"

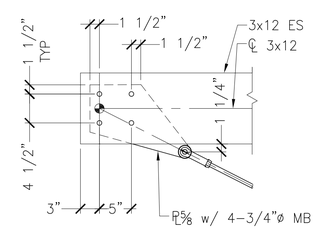

SECTION 6
1"=1'-0"

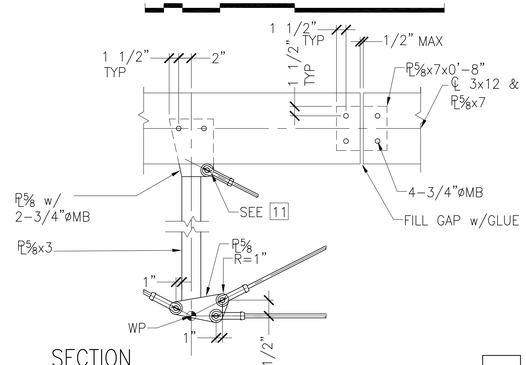

SECTION 2
1"=1'-0"

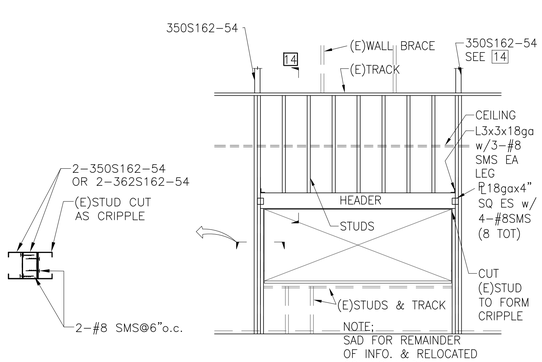

ELEVATION 13
1/4"=1'-0"

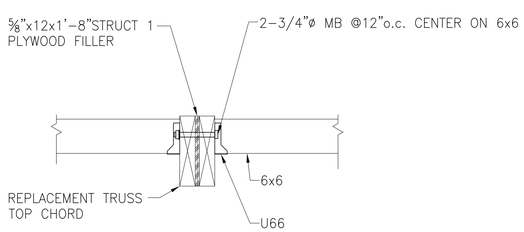

SECTION 9
1"=1'-0"

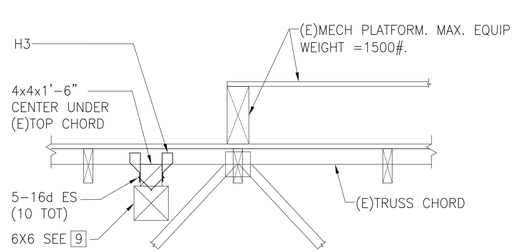

SECTION @ (E) MECH. PLATFORM 5
1"=1'-0"

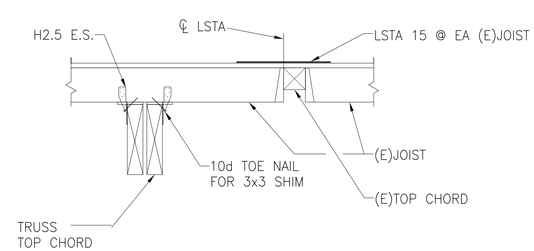

SECTION 1
1"=1'-0"

OWNER:
Solano Community College District
2000 North Village Parkway
Vacaville, CA 95688

ARCHITECT:
CA ARCHITECTS
475 Gate Five Road, Suite 107
Sausalito, CA 94965
T 415.331.7655
F 415.331.7656

PROJECT:
Vacaville Classroom Building (Annex) Renovation Project

CONSULTANT TEAM:
TENNEBAUM-MANHEIM ENGINEERS
414 MASON STREET, # 605
SAN FRANCISCO, CA. 94102
(415) 772-9891

STAMP

SHEET LEGEND:

ISSUE/REVISION:

NO:	DATE:	DESCRIPTION:
	04/25/2017	ISSUE FOR DD 100%
	06/06/2017	ISSUE FOR CD 50%
	06/30/2017	ISSUE FOR CD 60%
	10/18/2017	DSA BACKCHECK

KEY PLAN:

FILE: 48-C1
IDENTIFICATION STAMP
DIVISION OF THE STATE ARCHITECT
02-116082
AC ICC FLS GBC SSPVL
DATE: 10/31/2017

SCALE:
DATE:
PROJECT NO:
PERMIT APPLICATION NO.:

SECTIONS & DETAILS

S4.2

Time: 10:38:1
Date: 6/2/2017
Scale: 1=1(PS)
Drawing File: C:\CAD Data\TME\SCC Vacaville\S4_2.dwg.DWG (Greenwood)

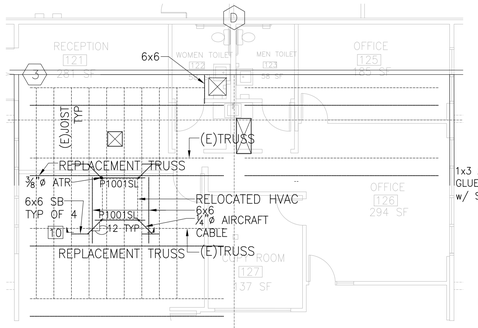

PARTIAL ROOF FRAMING PLAN 16

1/8"=1'-0"

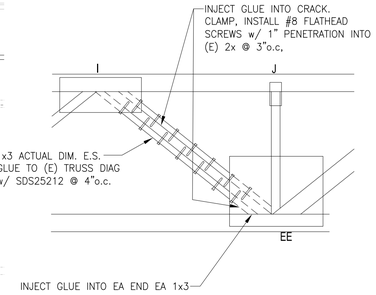

DETAIL @ C.1–D 3.6 12

1"=1'-0"

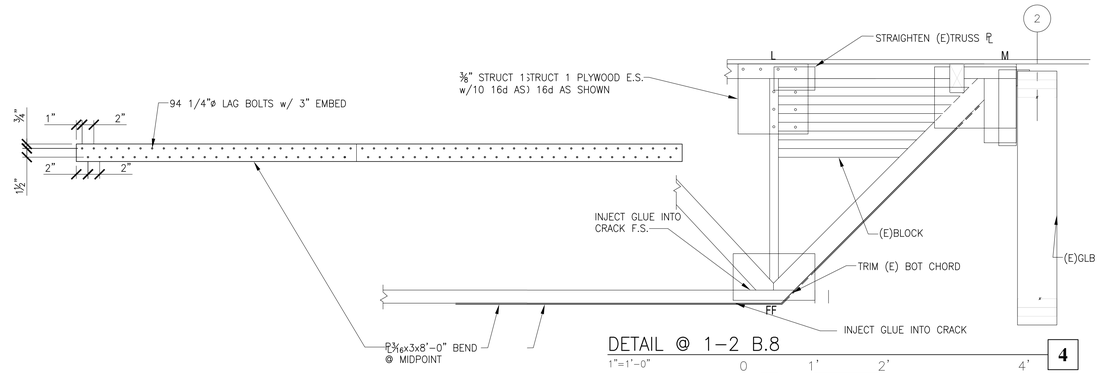

DETAIL @ 1–2 B.8 4

1"=1'-0"

A. FOR INJECTION INTO CRACKS USE A LOW VISCOSITY, 2 PART, HIGH STRENGTH, MULTI–PURPOSE EPOXY RESIN SUCH AS SIKADUR 35 HI MOD LV OR EQUAL. FOLLOW ALL MANUFACTURER'S INSTRUCTIONS AND RECOMMENDATIONS. CLAMP TO 150 PSI FOR 1 HOUR OR APPLY NAILS OR SCREWS IMMEDIATELY.

B. FOR GLUING MEMBERS TO PLY WOOD OR TO MEMBERS USE A WOOD GLUE CONFORMING TO ASTM D4236 SUCH AS TITEBOND III OR EQUAL. CLAMP TO 150 PSI FOR 1 HOUR OR APPLY NAILS OR SCREWS IMMEDIATELY.

C. SUBMIT GLUE AND EPOXY DATA SHEETS.

D. PRE–DRILL HOLES FOR NAILS OR SCREWS

E. ALL (N)LUMBER TO BE DF#1

F. REMOVE THE MINIMUM AMOUNT OF SHORING TO ACCOMPLISH WORK. REMOVE SHORING AFTER INSTALLATION OF REPLACEMENT TRUSSES

REPAIR NOTES 11

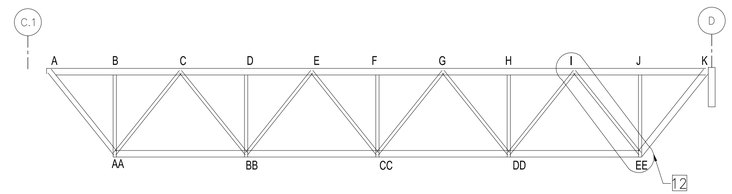

(E) TRUSS ELEVATION 25'–0" GL 3.6 GLsC.1–D 3

3/8"=1'-0"

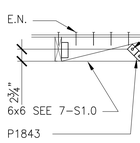

SECTION 14

3/4"=1'-0"

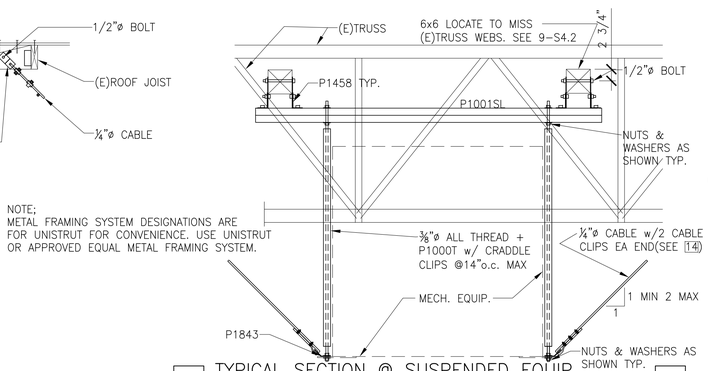

TYPICAL SECTION @ SUSPENDED EQUIP. 10

3/4"=1'-0"

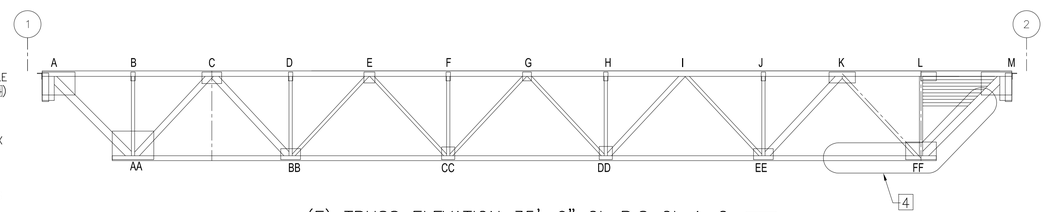

(E) TRUSS ELEVATION 35'–6" GL B.8 GLs1–2 2

3/8"=1'-0"

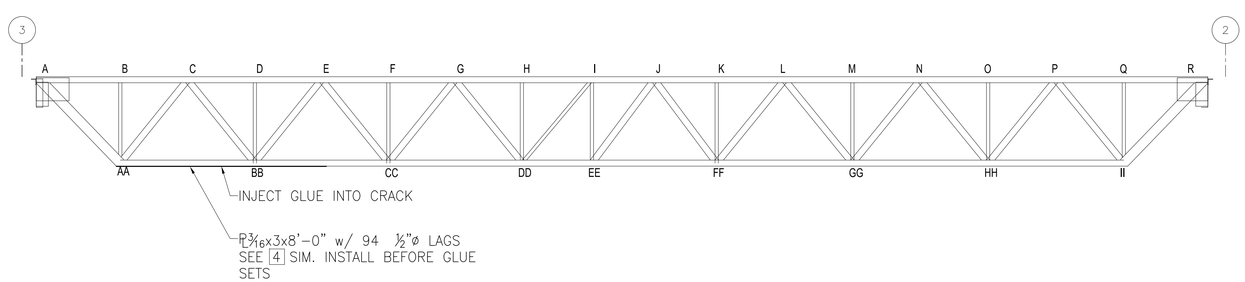

(E) TRUSS ELEVATION 44'–6" GL B.2 GLs2–3 1

3/8"=1'-0"

OWNER:

Solano Community College District
2000 North Village Parkway
Vacaville, CA 95688

ARCHITECT:

CA ARCHITECTS
475 Gate Five Road, Suite 107
Sausalito, CA 94965
T 415.331.7655
F 415.331.7656

PROJECT:

Vacaville Classroom Building (Annex) Renovation Project

CONSULTANT TEAM:

TENNEBAUM–MANHEIM ENGINEERS
414 MASON STREET, # 605
SAN FRANCISCO, CA. 94102
(415) 772–9891

STAMP

SHEET LEGEND:

ISSUE/REVISION:

NO:	DATE:	DESCRIPTION:
	04/25/2017	ISSUE FOR DD 100%
	06/06/2017	ISSUE FOR CD 50%
	06/30/2017	ISSUE FOR CD 60%
	10/18/2017	DSA BACKCHECK

KEY PLAN:

FILE: 48-C1
IDENTIFICATION STAMP
DIVISION OF THE STATE ARCHITECT
02-116082
AC TCC FLS GBC SS PVL
DATE: 10/31/2017

SCALE:
DATE:
PROJECT NO:
PERMIT APPLICATION NO.:

ELEVATIONS & DETAILS

S4.3